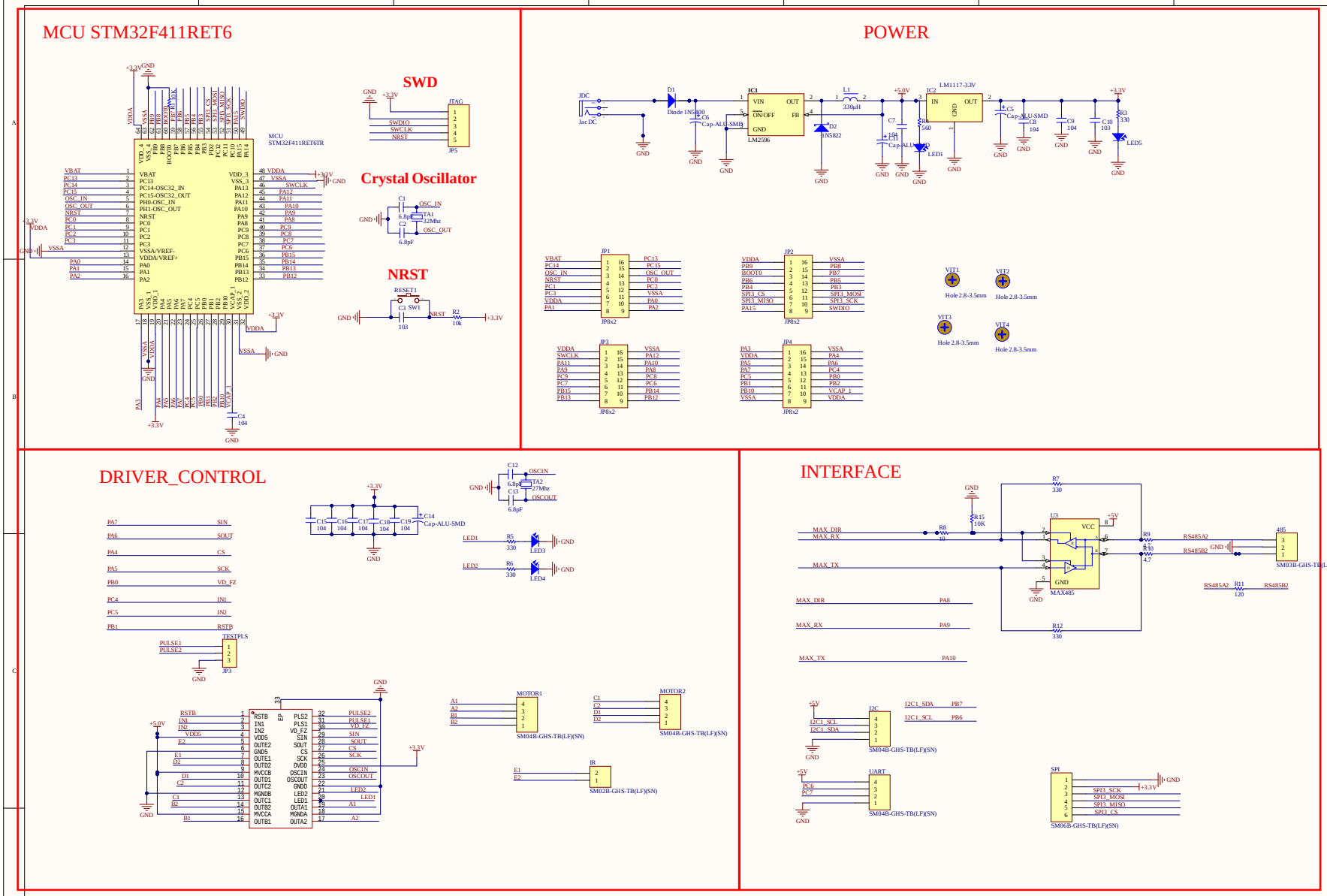

Title		
Size A2	Number	Revision
Date: 2/24/2026		Sheet of
File: E:\Tuan Document\..\v1.SchDoc		Drawn By:

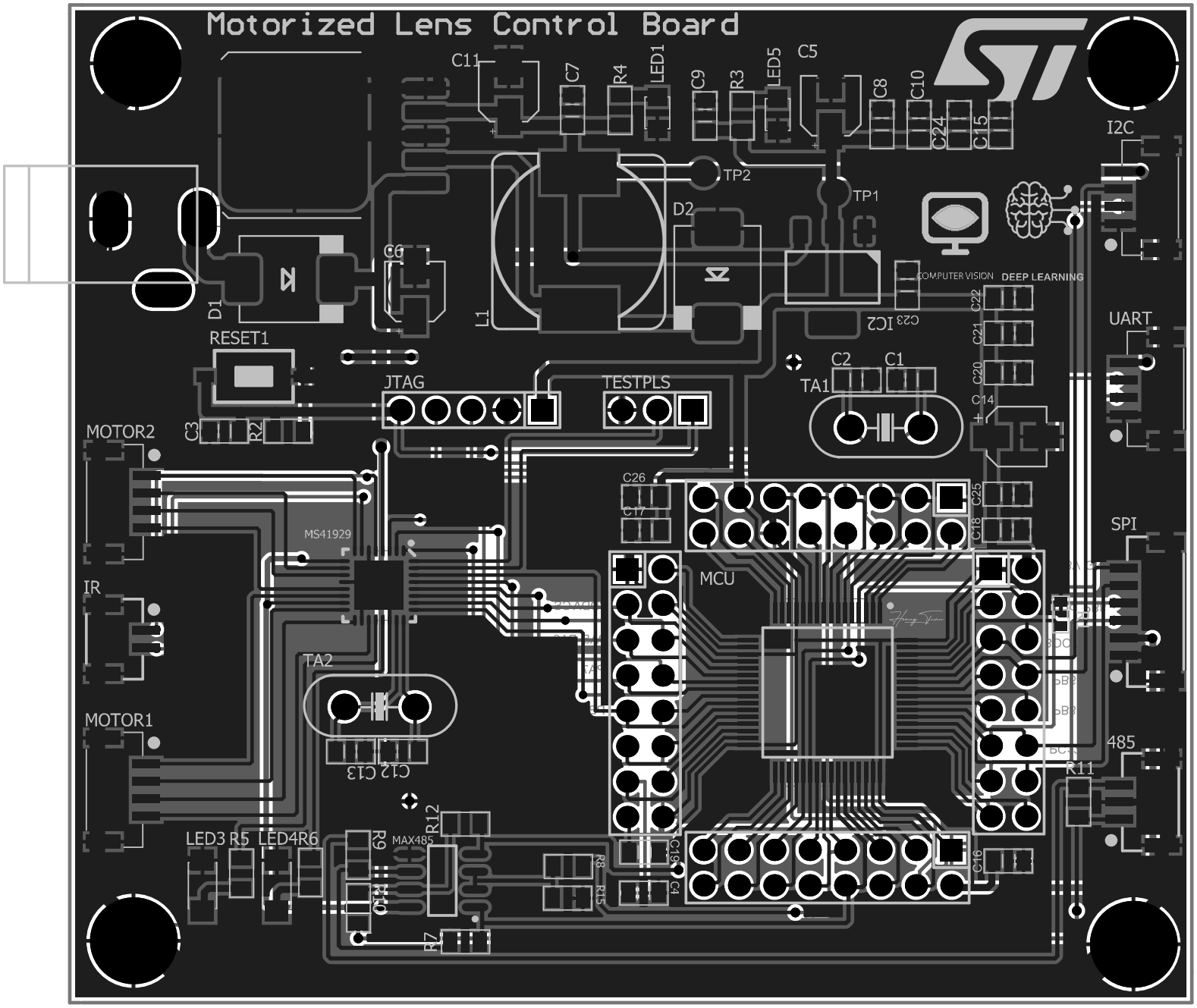
Motorized Lens Control Board
C11
C7
R4
LED1
C9
R3
LED5
C5
C8
C10
C24
C15
I2C
TP2
TP1
D2
C6
D1
L1
IC2
C23
COMPUTER VISION
DEEP LEARNING
C22
C21
C20
C14
UART
RESET1
JTAG
TESTPLS
C2
C1
TA1
MOTOR2
C3
R2
C26
C17
C25
C18
SPI
MS41929
MCU
IR
TA2
MOTOR1
C13
C12
485
R11
R12
LED3
R5
LED4
R6
R9
R10
MAX485
R8
R15
C19
C4
C16
R7

Board Stack Report