PARTS LIST			
ITEM	QTY	PART NUMBER	PART NAME
1	1	A-TET-001100-0	PAPRA PCB V14
2	2	M-CUI-PJ-066A	DC POWER JACK V3
3	1	M-TTE-P091S-FC20BR10K	POTENTIOMETER V3
4	2	M-CUI-PJ-005X-HDW	POWER JACK NUT V2
5	2	M-CUI-PJ-005X-HDW	POWER JACK WASHER V3
6	1	M-TTE-34-1032-2A	POTENTIOMETER NUT V3
7	2	M-TEC-1217754-1	PCB TERMINAL V4
8	1	M-TTE-P091S	POTENTIOMETER WASHER V3

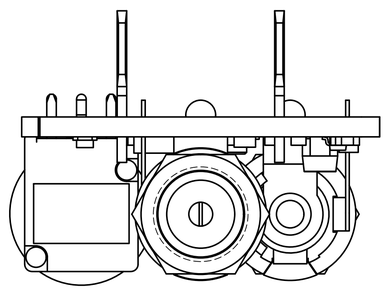

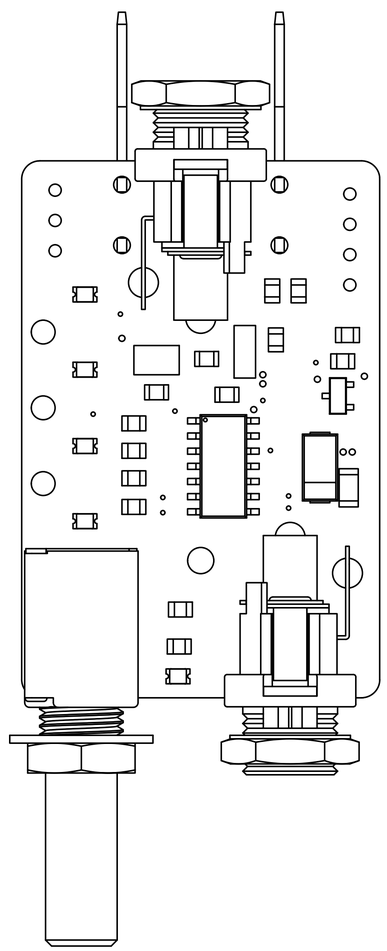

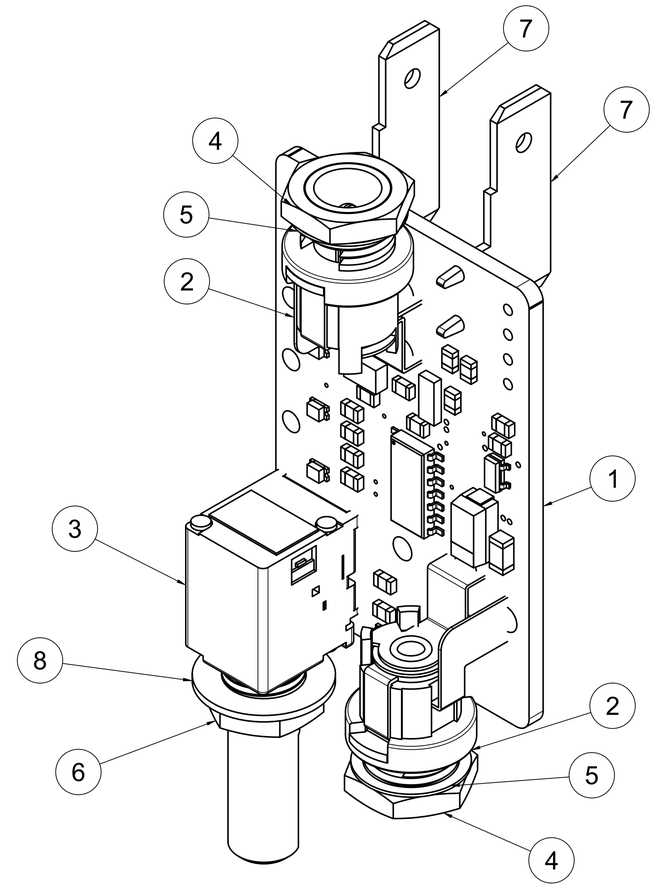

Notes (unless otherwise specified):
1. This drawing is construed as information only, it is complete only to the degree necessary to illustrate a system definition for assembly

Copyright Notice:
This drawing is open hardware: you can redistribute it and/or modify it under the terms of the CERN OPEN HARDWARE LICENSE VER 2 - PERMISSIVE
See ohwr.org/cern_ohl_p_v2.pdf

UNITS: MM

TOLERANCES:
x ± 0.5
.x ± .2
.xx ± .1
Angles ± 0.5°

3rd ANGLE PROJECTION

TETRA BIO DISTRIBUTED

WWW.TETRABIODISTRIBUTED.ORG

APPROVED	Mark Roden		
APPROVED DATE	11/02/2021		
CHECKED	Patrick Campbell		
DRAWN	Darragh Broadbent		

PROJECT: Papra

TITLE: Papra Control PCBA

SIZE	DATE	PART NO	REV
D	11/02/2021	D-TET-001100-0	

DO NOT SCALE | MATERIAL: | SHEET 1/1