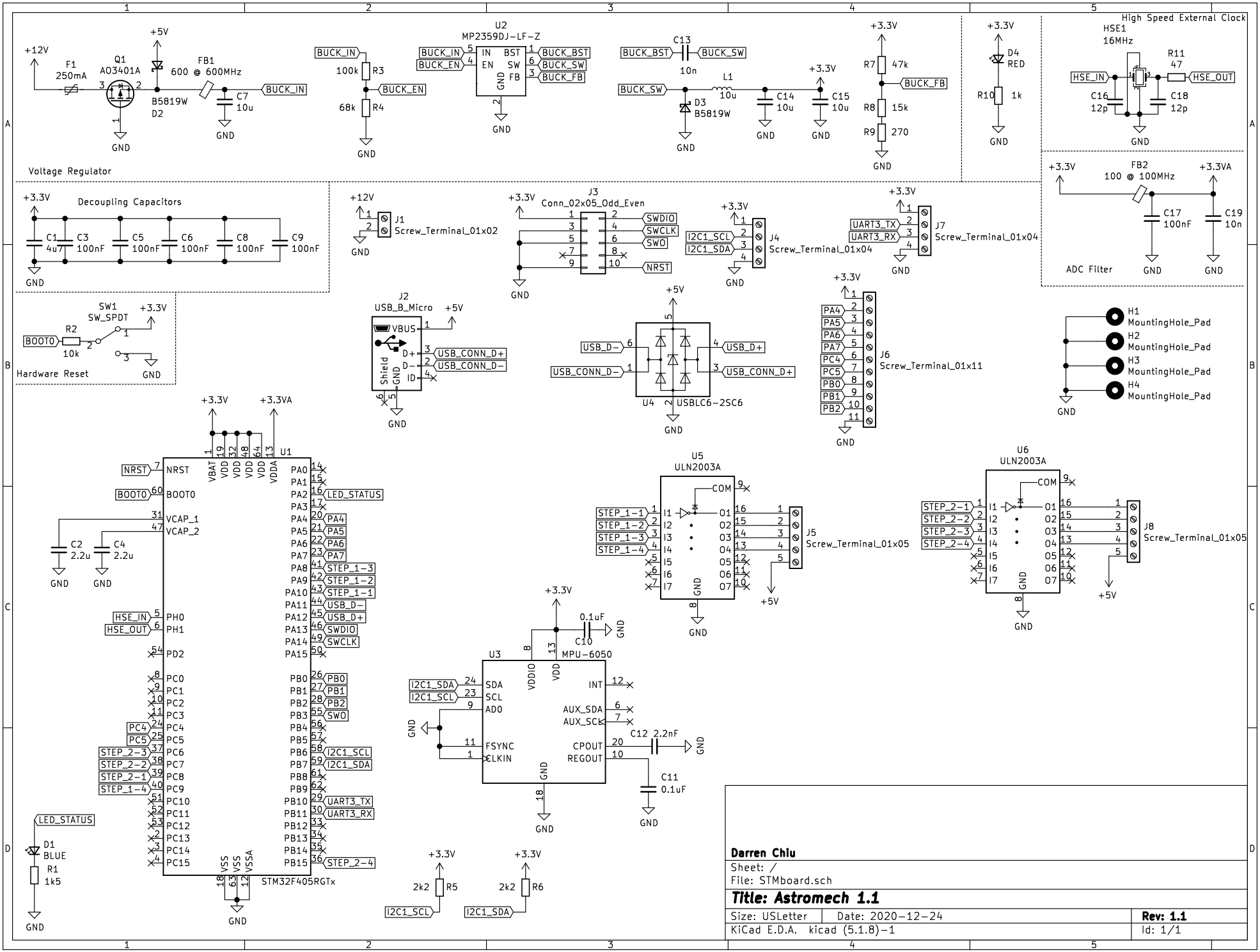
Voltage Regulator
+12V
F1
250mA
Q1
AO3401A
+5V
B5819W
D2
FB1
600 @ 600MHz
C7
10u
BUCK_IN
GND
100k
R3
68k
R4
BUCK_EN
U2
MP2359DJ-LF-Z
IN
EN
BST
SW
FB
BUCK_BST
BUCK_SW
BUCK_FB
C13
10n
L1
10u
D3
B5819W
C14
10u
C15
10u
+3.3V
R7
47k
R8
15k
R9
270
D4
RED
R10
1k
High Speed External Clock
HSE1
16MHz
R11
47
HSE_IN
HSE_OUT
C16
12p
C18
12p
FB2
100 @ 100MHz
+3.3VA
C17
100nF
C19
10n
ADC Filter
Decoupling Capacitors
C1
4u7
C3
100nF
C5
100nF
C6
100nF
C8
100nF
C9
100nF
J1
Screw_Terminal_01x02
J3
Conn_02x05_Odd_Even
SWDIO
SWCLK
SWO
NRST
J4
Screw_Terminal_01x04
I2C1_SCL
I2C1_SDA
J7
Screw_Terminal_01x04
UART3_TX
UART3_RX
SW1
SW_SPDT
R2
10k
BOOT0
Hardware Reset
J2
USB_B_Micro
VBUS
D+
D-
ID
Shield
USB_CONN_D+
USB_CONN_D-
U4
USBLC6-2SC6
USB_D+
USB_D-
J6
Screw_Terminal_01x11
PA4
PA5
PA6
PA7
PC4
PC5
PB0
PB1
PB2
H1
MountingHole_Pad
H2
MountingHole_Pad
H3
MountingHole_Pad
H4
MountingHole_Pad
U1
STM32F405RGTx
VBAT
VDD
VDDA
VCAP_1
VCAP_2
C2
2.2u
C4
2.2u
HSE_IN
HSE_OUT
LED_STATUS
STEP_1-1
STEP_1-2
STEP_1-3
STEP_1-4
STEP_2-1
STEP_2-2
STEP_2-3
STEP_2-4
SWDIO
SWCLK
SWO
I2C1_SCL
I2C1_SDA
UART3_TX
UART3_RX
VSS
VSSA
D1
BLUE
R1
1k5
U5
ULN2003A
COM
STEP_1-1
STEP_1-2
STEP_1-3
STEP_1-4
J5
Screw_Terminal_01x05
U6
ULN2003A
STEP_2-1
STEP_2-2
STEP_2-3
STEP_2-4
J8
Screw_Terminal_01x05
U3
MPU-6050
VDDIO
VDD
SDA
SCL
AD0
FSYNC
CLKIN
INT
AUX_SDA
AUX_SCL
CPOUT
REGOUT
C10
0.1uF
C12
2.2nF
C11
0.1uF
R5
2k2
R6
2k2
Darren Chiu
Sheet: /
File: STMboard.sch
Title: Astromech 1.1
Size: USLetter
Date: 2020-12-24
Rev: 1.1
KiCad E.D.A. kicad (5.1.8)-1
Id: 1/1