DESIGN, ANALYSIS, FABRICATION AND TESTING OF THRUST VECTOR CONTROL MODEL ROCKET

(Submitted in partial fulfilment of the requirements.)

For the degree of

Bachelor of Technology

Aerospace Engineering

Final year project

Submitted by

SOHAM KARHADKAR (A70405520011)

DARSH BUTALA (A70405520001)

TANISH SHETTY (A70405520009)

TUSHANK BISHT (A70405520021)

Under the Guidance of

Dr. SWAGATA PAUL

AMITY SCHOOL OF ENGINEERING AND TECHNOLOGY

AMITY UNIVERSITY MAHARASHTRA

2023-24

DECLARATION

We dedicate our dissertation work to our family and friends. A special feeling of gratitude to our loving parents, whose words of encouragement and push for tenacity ring in our ears and have never left our side and are incredibly special.

We also dedicate this dissertation to our many friends and family who have supported us throughout the process. We will always appreciate all they have done, especially in helping us develop our technology skills, for the many hours of proofreading.

We dedicate this work and give special thanks to our **Prof. Dr. Amol G. Kamble, Prof. Swagata Paul** for being there for us throughout the entire bachelor program. You have been our best supporter and motivation.

Soham Karhadkar
A70405520011

Tanish Shetty
A70405520009

Tushank Bisht
A70405520021

Darsh Butala
A70405520001

APPROVAL

This is to certify that **Mr. Soham Karhadkar**, **Mr. Tanish Shetty, Mr. Darsh Butala** & **Mr. Tushank Bisht** have successfully completed their project (Final stage) on **"Design, Analysis, Fabrication & Testing of Thrust vector model rocket"**. During the academic term 2023-24 and his report is approved for final submission.

Examinator

- - - - - - - - - - - - - - - -

- -

Date:

Place:

Amity School of Engineering & Technology

Bachelor of Technology – (Aerospace Engineering)

Semester - (VIII)

This is to certify that the project entitled **"Design, Analysis Fabrication & Testing of Thrust Vector Control Model Rocket"** is a bonafide work of **Mr. Soham Karhadkar, Mr Darsh Butala, Mr Tanish Shetty and Mr. Tushank Bisht** submitted to the **Amity School of Engineering and Technology, Amity University Mumbai** in partial fulfilment of the requirement for the degree of **Bachelor of Technology in Aerospace Engineering**.

(Supervisor)

(Coordinator, Department)

(Director, ASET)

ACKNOWLEDGEMENTS

Throughout the journey of this work till that date we realized more strongly how much selfless efforts and goodwill of others have helped. It is a matter of gratification for us to pay our respect and acknowledgement to all those who have imparted knowledge and helped us to complete our report. Firstly, we would like to acknowledge the great contribution and support we received in this endeavor from our project guide **Prof Swagata Paul** for this project **"Design, Analysis, Fabrication & Testing of Thrust Vector Control Rocket"**.

Our special thanks to **Dr. Srikant Charhate, Dean Academics-AUM**, Director- ASET for his encouragement during the project.

We are always grateful for motivation and support that received from **Prof Dr Amol G Kamble and Prof Rajinikanth Kelakeri.** We are also thankful to all the teaching and non-teaching staff of the Department.

Finally, we thank all the unmentioned names and invisible hands who helped us in bringing this project report to the present form.

ABSTRACT

To achieve a successful Thrust Vector Controlled launch and potentially a vertical landing, several factors must be considered, including the rocket's structural design, the selection of the appropriate motor and sensors and the development of a flight computer and software. Furthermore, it is necessary to model the rocket's physical behaviour and simulate the flight to find and fine-tune the optimal values for the PID controller. However, the process does not end with the launch; data logging during the flight is essential to analyse the rocket's performance and identify areas for improvement. By analysing the data, one can gain insights into the rocket's stability and response to different conditions. This thesis presents a comprehensive overview of the necessary steps involved in designing and launching a TVC rocket, including practical demonstrations of the process. The findings demonstrate the usage of TVC for model rocketry and highlight the importance of careful planning and execution in achieving a successful launch. The techniques outlined in this thesis provide practical guidance for those interested in implementing TVC in their projects.

Keywords: Thrust Vector Control, 3D Modelling, Flight Computer Design, PID Controller.

OBJECTIVES

This bachelor thesis aims to delve into the design and development of a Thrust Vector Controlled (TVC) model rocket. The TVC model rocket is a unique type of rocket that utilizes a control system to alter the direction of thrust, providing stability and control during flight. The following steps will be covered in this paper:

1. Develop a thrust vector control (TVC) mechanism capable of altering the trajectory of a model rocket during flight.

2. Develop a comprehensive flight simulation model to accurately replicate the trajectory and performance of model rocket system.

3. Investigate and implement various control strategies, focusing on optimizing response time, stability, and precision in adjusting the model rocket's trajectory.

4. Fabricate a model rocket prototype ensuring the integration of the thrust vector control (TVC) mechanism and other components in accordance with design specifications.

5. Conduct the final flight test of the thrust vector control (TVC) model rocket to assess its performance, trajectory, and stability under real-world launch conditions, thereby validating the effectiveness of the design, simulations, and control mechanisms.

LIST OF TABLES

TABLE 1 MATERIAL USED IN ROCKET BODY 33

TABLE 2 BAROMETER SPECIFICATIONS 48

TABLE 3 BAROMETER TECHNICAL DATA 49

TABLE 4 SD CARD SPECIFICATIONS 57

TABLE 5 SERVO MOTOR SPECIFICATIONS 61

TABLE OF CONTENTS

ACKNOWLEDGEMENTS 5

ABSTRACT 6

OBJECTIVES 7

LIST OF TABLES 8

1. INTRODUCTION 14

1.1 Motivation 15

2. LITERATURE REVIEW 16

2.1 Introduction 16

2.2 Design of TVC rocket 16

2.3 Avionics 18

2.4 Flight software and control system development 19

2.5 Landing legs 20

2.6 Conclusion 20

3.ROCKET MOTOR 21

3.1 Working 21

3.2 Components of a rocket motor 22

3.3 Choosing Solid rocket motor. 22

3.4 Classification of solid motor 23

4.THRUST VECTOR CONTROL 26

4.1 Introduction 26

4.2 Rocket stability 27

5. ROCKET BODY 30

5.1 Introduction 30

5.2 Body weight 32

5.3 Design and Dimensions 33

5.3.1 Rocket tube 33

5.3.2 Nose Cone 34

5.3.3 Motor Mount 34

5.3.4 Outer Gimbal 35

5.3.5 Inner Gimbal 35

5.1 Printer setting 35

5.5 Building the rocket body 37
5.5.1 TVC Mount 37
5.5.2 Calibration 39
5.5.3 Moment of Inertia 39
5.5.4 Landing legs 41
6.1 Introduction 44
6.2 Barometer 47
6.3 INERTIAL MEASUREMENT UNIT 50
6.4 3-Axis Gyroscope 51
6.5 3-Axis Accelerometer 52
6.6 Specification of MPU6050 Sensor 53
6.7 MOSFET 55
6.8 SD Card Module 56
6.9 ARDUINO NANO 58
6.10 Communication 59
7.FLIGHT SOFTWARE 62
7.1 Working of Arduino IDE 64
7.2 Schematic Diagram 65
7.3 PCB Design 66
7.4 Example of code 67
8. Developing a Control Algorithm and Simulation for Thrust Vector Controlled Rockets. 72
8.1 Introduction 73
8.2 Control Theory 74
8.3 PID controller 76
8.4 Simulink Parameters 77
9.Rocket launch 81
9.1 Expected flight phases. 81
9.2 Result and conclusion 83
9.3 Future scope 85
References 87

LIST OF FIGURES

FIGURE 1: DIFFERENT ORIENTATIONS OF TVC MODEL ROCKET 14

FIGURE 2 TVC ROCKET DESIGN FROM FUSION 360 14

FIGURE 3 SOLID ROCKET ENGINE MECHANISM (HALL, 2021) 21

FIGURE 4 SOLID ROCKET MOTOR COMPONENTS (APOGEEROCKETS, 2019) 22

FIGURE 5 ESTES MOTOR THRUST VS TIME CURVES (LUKAS, 2023) 24

FIGURE 6 E6-3 MOTOR THRUST VS TIME CURVES 25

FIGURE 7 ROCKET STABILITY (DASILVA, 2023) 27

FIGURE 8 EXAMPLES OF CONTROLS (DASILVA, 2023) 28

FIGURE 9 TVC MOUNT DESIGN 29

FIGURE 10 ROCKET BODY (NAME - GARUD) 31

FIGURE 11BODY TUBE 33

FIGURE 12 NOSE CONE 34

FIGURE 13 MOTOR MOUNT 34

FIGURE 14 OUTER GIMBAL 35

FIGURE 15 INNER GIMBAL 35

FIGURE 16 ULTIMAKER CURA PRINTER SETTINGS 36

FIGURE 17 TVC MOUNT 38

FIGURE 18 CALIBRATED CIRCUIT 38

FIGURE 19 CALIBRATED CIRCUIT WITH TVC MOUNT 39

FIGURE 20 STRUTS 41

FIGURE 21 LANDING LEG 41

FIGURE 22 ATTACHMENT RING 41

FIGURE 23 LANDING LEGS 42

FIGURE 24 INSIDE OF THE ROCKET BODY 43

FIGURE 25 AVIONICS 46

FIGURE 26 BAROMETER 47

FIGURE 27 MPU 6050 51

FIGURE 28 POLARITY OF MPU 6050 51

FIGURE 29 3 AXIS ACCELEROMETER TILTING 52

FIGURE 30 MOSFET 55

FIGURE 31 SD CARD 57

FIGURE 32 ARDUINO NANO 59

FIGURE 33 SERVO MOTOR 61

FIGURE 34 CALIBRATION OF ARDUINO NANO ALONG WITH MPU 6050 63

FIGURE 35 SCHEMATIC DIAGRAM OF ARDUINO NANO 65

FIGURE 36 PCB DESIGN 66

FIGURE 37 PID EQUATION (ITURREGUI, 2022) 75

FIGURE 38 PID CONTROLLER SIMULINK 77

FIGURE 39 TWO STAGE CONTROL SYSTEM 78

FIGURE 40 DELAY MECHANISM 79

FIGURE 41 GRAPH OUTPUT 80

FIGURE 42 LAUNCH READY GARUD 82

FIGURE 43 IGNITION STAGE OF THE ROCKET 83

FIGURE 44 ELECTRONIC PARTS OF THE ROCKET BODY AFTER THE LAUNCH 84

FIGURE 45 CANARD CONTROL (SHANG, 2022) 86

ABBREVIATIONS

TVC	Thrust vector control
CAD	Computer aided design
PCB	Printed circuit board
COM	Centre of mass
PLA	Polylactic acid
PID	Proportional Integral derivative
IMU	Inertial measuring unit
D	Degrees per second
MEM	micro-electromechanical system
USB	Universal serial bus
LED	Light-emitting diode
MATLAB	Matrix laboratory

1. INTRODUCTION

Thrust Vector Control (TVC) constitutes the deliberate manipulation of rocket thrust direction to govern the rocket's attitude, or orientation, during flight. In contrast to conventional fixed-nozzle rockets, which rely solely on aerodynamic fins or external mechanisms for stabilization, TVC provides a dynamic approach to altering the rocket's trajectory by redirecting engine thrust.

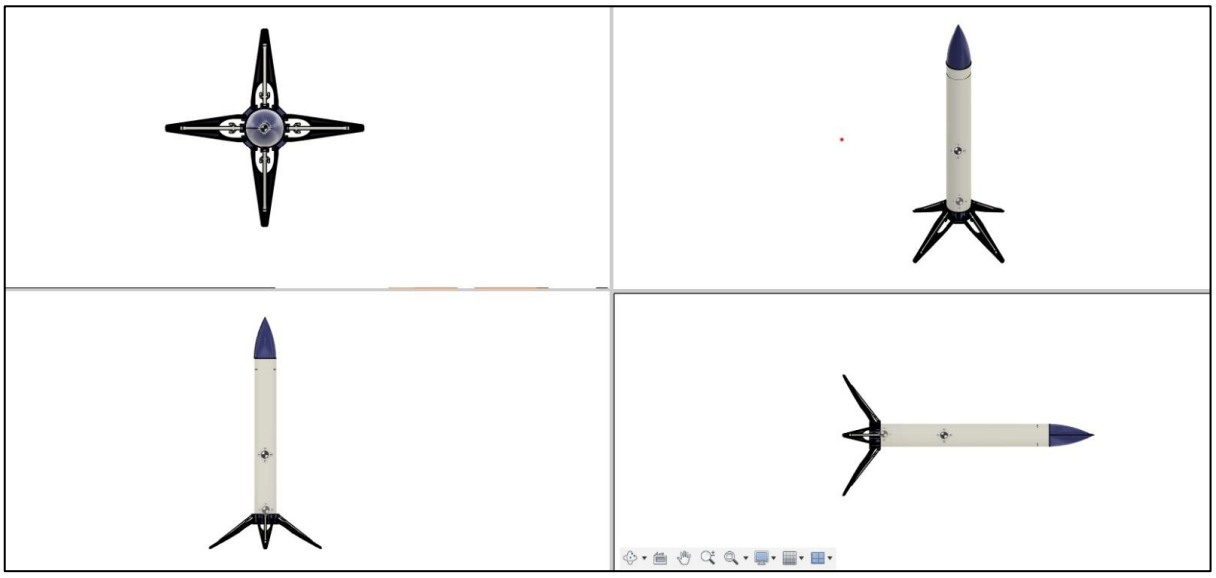

Figure 1: Different orientations of TVC model rocket

The figure mentioned above represents the different orientations of TVC rocket design for this project.

For reusable rockets, TVC emerges as an attractive solution to the complexities associated with controlled descent and landing. Through precise adjustments in thrust direction, these rockets can effectively counter external forces such as wind or atmospheric disturbances, thereby facilitating safe and accurate landings.

1.1 Motivation

Thrust vector control (TVC) act as the kingpin in model rocket engineering it enhances the prospects of solid motor-powered rockets and fearlessly addressing new problems. My years of studying at the university epitomized the symbiosis of theoretical knowledge and practical skills that finally led to the creation of the rocket and the implementation of a software product. This odyssey has also been a process of growth, for I had to explore into new areas for me such as 3D modelling and assembling a PCB.

However, this is not simply a cursory investigation of the problem at hand; instead, it goes to the heart of understanding the mechanics of TVC in model rocketry. Not only does the successful ability and achievement in controlling and setting down mini rockets indicate a measure of success in the mission but also opens doors for further attempts at using larger rockets in the future.

In this domain, the perturbations such as the fluctuations in wind gust, rocket drag and air density are reduced, thereby creating a stronger and prepared system in preparation for the next tests. Hence, each flight is all demonstration, which in turn provides a push towards increased achievements and expanded realms in rocketry discovery.

2. LITERATURE REVIEW

2.1 Introduction

The main motivation behind this work is the development of thrust Vector Control (TVC) technology as the actuation method and aims to control the rocket's pitch and yaw angles. The roll angle is assumed to be controlled by an additional roll control system whose design is out of the scope of this work. In the realm of actuation methods, the utilization of Thrust Vector Control (TVC), often abbreviated as thrust vectoring, emerges as a prevalent choice among launch vehicles. This technique operates by dynamically altering the direction of the thrust vector, thereby generating a control torque. When juxtaposed with alternative actuation techniques such as actively controlled fins, TVC boasts a distinct advantage: it offers a broader spectrum of operational conditions and yields superior efficiency.

By harnessing the versatility of TVC, launch vehicles can adapt swiftly to varying flight parameters, ensuring optimal performance across a wide array of scenarios. This dynamic responsiveness not only enhances operational flexibility but also bolsters overall mission success rates. Thus, within the realm of aerospace engineering, the adoption of TVC stands as a testament to innovation and efficiency, propelling the boundaries of possibility ever further.

The main idea of thrust vectoring was inspired by SpaceX's Falcon series missions particularly the Falcon 9 and its successful thrust vector control and landing. Although the latter was done on a very large scale and reasonably high costs.

2.2 Design of TVC rocket

The design of the TVC gimbaled is classified in 2 parts inner and outer gimbal where both with the aid of the actuation system consisting of 2 servo motors control the thrust produced by motor and vector it in a way that the rocket trajectory remains stable. The TVC

unit vector is controlled mainly in 2 directions that is the z and the y directions according to the given frame of reference:

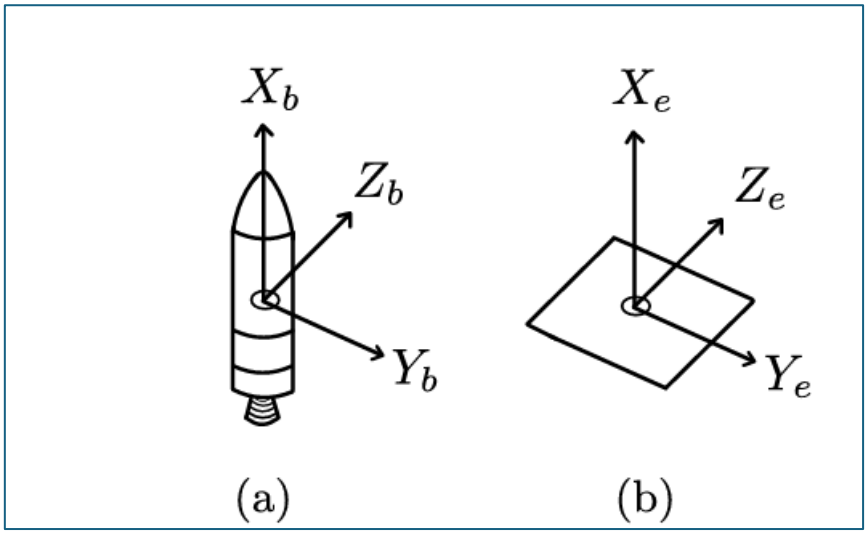

Figure 2: Reference frames *(Lukas, 2023)*

The x-axis (Xb) is along the rocket's longitudinal axis, while the z-axis (Zb) and y-axis (Yb) complete the orthogonal reference frame. As for the inertial space-fixed reference frame, given that neither the curvature nor the rotational motion of the Earth is considered, a simple orthogonal frame centred in the launch location is used. The x-axis (Xe) is pointing upwards, so that for a zero inclination launch the x-axes of both reference frames are aligned; and the other two axes (Ye and Ze) are prefer ably aligned with a pair of cardinal directions.

The first step to conduct such a complicated design and install it in a working model must be undergone through necessary steps. These include:

1. Developing a CAD model (Fusion 360) and fine tuning the dimensions taking in consideration the 3D printed model.
2. After rendering and successfully uploading the file on Ulti maker Cura software 3D printed models are generated

3. The design will be having COM and other properties.
4. The material in which the model is 3D printed is PLA which include the TVC unit, landing legs and the rocket material includes a cardboard tube as well as a nose cone of the same material.

2.3 Avionics

The data for all the stages could be stored in a so-called ready to use flight computer which costs around 30k INR but drastically exceeds our budget therefore the avionics team had to develop its own codes for separate stages and integrate them using Arduino IDE and develop its own Flight Computer.

When it comes to developing the FC, starting with a breadboard or protoboard is more forgiving, especially for initial attempts, allowing for easier modifications and testing. Once the design is finalized, transitioning to a PCB offers advantages such as reduced weight, improved performance, and a cleaner look. The PCB was designed using Eagle IDE.

The components used in flight computer are as follows whose details would be discussed in a different section of this paper:

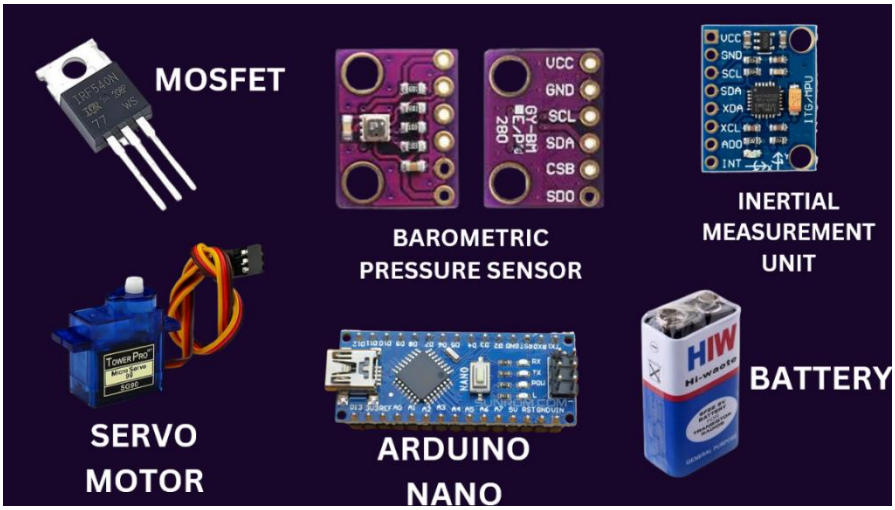

Figure 3: Avionics components

2.4 Flight software and control system development

The rocket parameters such as thrust, weight, number of motors and its preliminary design were designed in Open Rocket.

Rocket trajectory once launched needs to be stable for safety and obvious reasons. This job is done by the TVC mount installed at the bottom of the interior of the rocket. For this TVC to work efficiently the fine tuning of the rocket trajectory by using control theory and overall use of PID controllers.

The basic idea behind a PID controller is to read a sensor, then compute the desired actuator output by calculating proportional, integral, and derivative responses and summing those three components to compute the output. Before we start to define the parameters of a PID controller, we shall see what a closed loop system is and some of the terminologies associated with it.

Closed Loop System

In a typical control system, the process variable is the system parameter that needs to be controlled, such as temperature (ºC), pressure (psi), or flow rate (litres/minute). A sensor is used to measure the process variable and provide feedback to the control system.

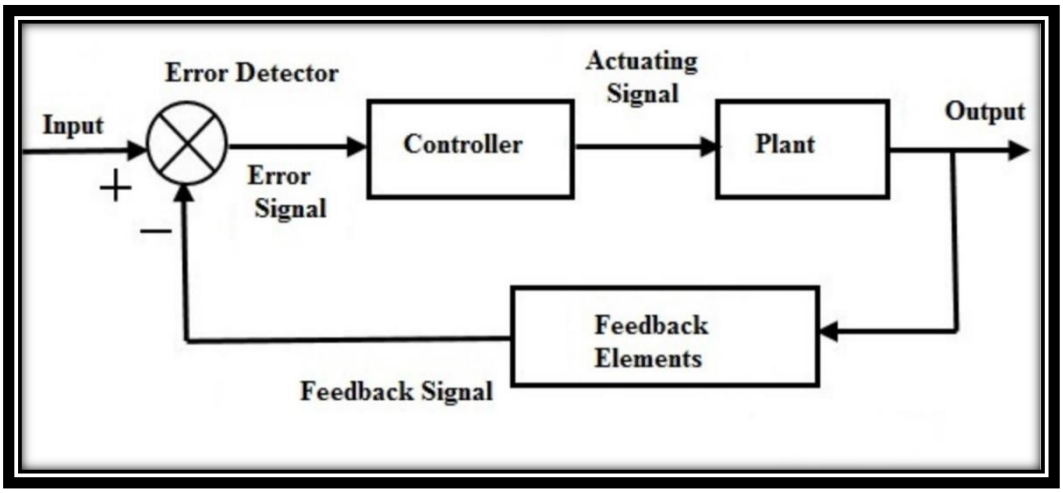

Figure 4: Control loop system

2.5 Landing legs

The landing legs selected for this project are retractable ones and made up of PLA. These are deployable legs and once the rocket is about to land these legs are deployed which aid in safe landing by using its shock absorption ability.

The landing legs used in bigger scale rockets like SpaceX's Falcon 9 use helium gases in their struts as the gases help in shock absorption. The landing legs are straight tied up to the rocket body when not in use and as the rocket reaches the ground the barometer signals the Arduino board and pyro gets fired and the legs are deployed at a maximum angle of 115 degrees.

The mechanism of landing is an important and robust task as the rocket's safety and reusability completely depends on it.

2.6 Conclusion

This paper guided by extensive research on TVC, landing mechanisms, avionics and flight software, highlights the future potential of these technologies. TVC systems are crucial for enhancing flight stability and control, paving the way for more precise and manoeuvrable rockets.

3.ROCKET MOTOR

3.1 Working

Rockets ascend through propellant combustion and gas expulsion, following Newton's Third Law of Motion, resulting in propulsion based on an equal and opposite reaction, quantified by Newton's Second Law of Motion. While seemingly straightforward, the physics underlying rocket propulsion is in fact highly complex, involving numerous interrelated factors that affect the performance of the rocket motor, such as the shape and size of its nozzle and the amount and composition of the propellant. Additionally, the characteristics of the surrounding environment, such as atmospheric pressure and wind resistance, can also impact the rocket's performance, further underscoring the intricacy of the physics involved.

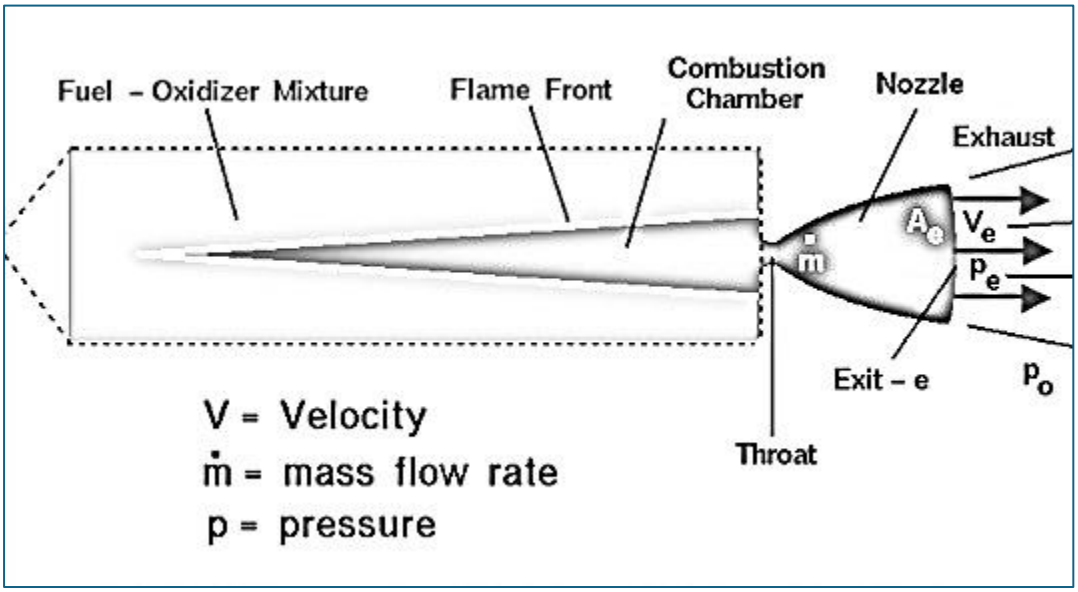

Figure 3 Solid rocket engine mechanism *(Hall, 2021)*

The choice of a motor is critical since the rocket is specifically designed for the rocket motor dimensions, and it directly affects the rocket's ideal weight. Moreover, if the motor is too powerful, and the rocket reaches a high maximum altitude, will need to use recovery systems.

3.2 Components of a rocket motor

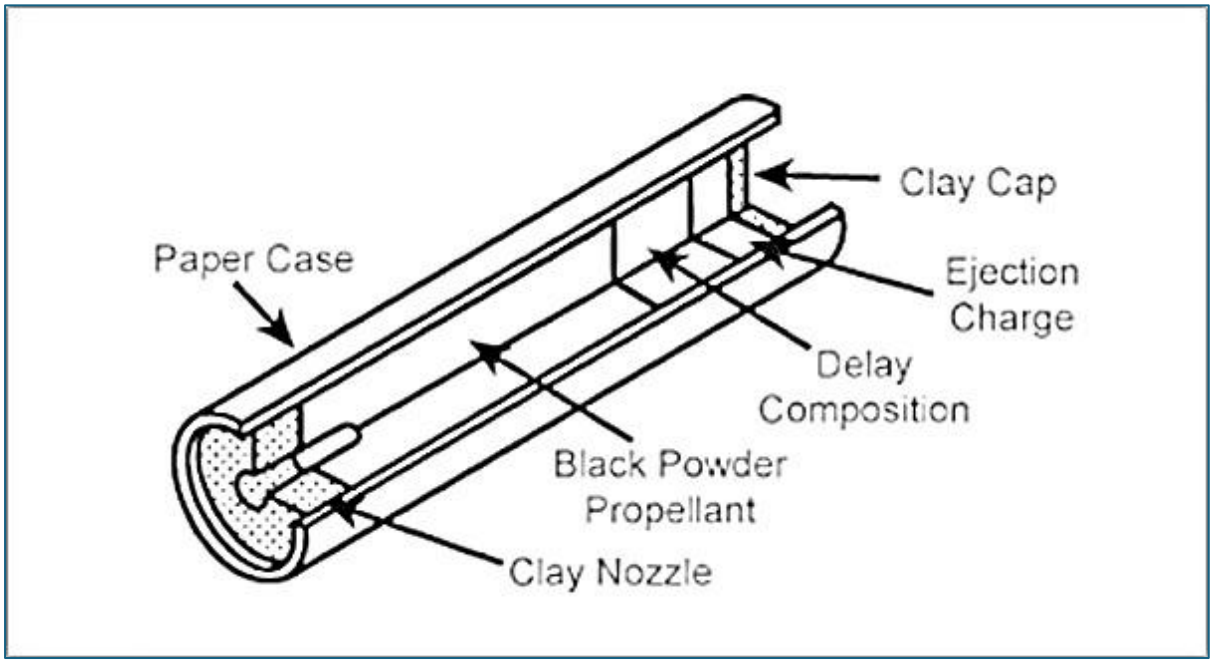

Figure 4 Solid rocket motor components (apogeerockets, 2019)

3.3 Choosing Solid rocket motor.

The primary goal of this endeavour is to engineer a reusable rocket endowed with a robust structure capable of enduring the rigors of flight. The overarching objective revolves around optimizing liftoff weight while extending burn time to its utmost limit, facilitating rigorous experimentation with active stabilization, and maximizing airborne duration.

An optimal scenario entails achieving a burn profile that spans as close to the ground as feasible, thereby obviating the necessity for a dedicated recovery system. To streamline the development process and circumvent the complexities and weight constraints associated with liquid propellant motors, the project will harness the simplicity and efficiency of solid motor technology. Through meticulous design and meticulous execution, this venture aspires to carve new pathways in rocketry, pushing the boundaries of what's achievable in terms of flight duration and operational efficiency.

Total impulse is the total amount of impulse produced by the rocket motor, measured in Newton-seconds. Thrust is the force produced by the rocket motor, which can vary depending on factors such as motor design, propellant type, and nozzle configuration. Burn time is the duration of a rocket motor burn, influenced by motor design, propellant quantity, and other factors.

3.4 Classification of solid motor

The following are the numbers and restrictions for each motor class:

• Motor class A: Total impulse range of 0.3125 - 0.625 Ns.

• Motor class B: Total impulse range of 1.25 - 2.50 Ns.

• Motor class C: Total impulse range of 5.0 - 10.0 Ns

• Motor class D: Total impulse range of 10.0 - 20.0 Ns

• Motor class E: Total impulse range of 20.0 - 40.0 Ns

If for example we have a motor class whose description is B4-2, it suggests that the code B4-2 is a class B motor with an average thrust of 4 N and a delay time of 2 seconds. If the delay is zero, there is no delay mixture for ejection.

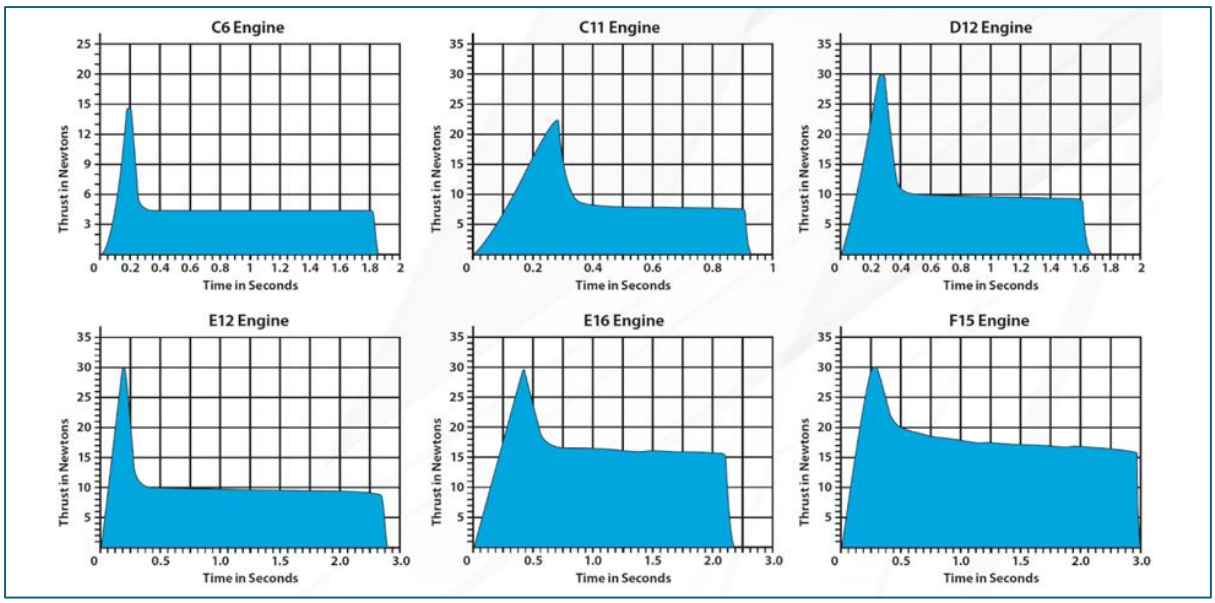

Figure 5 Estes motor thrust vs time curves *(Lukas, 2023)*

The motor that we will be using is the E6-3 motor from the renowned Aerosport Association. "The rocket motor is a significant part of any model rocket and has important role in making rockets fly. The toy rocket motors for various classes are used for launching flying model rockets. They are designed and developed specifically for model rockets kit as per the international standard by the Aero sports Association Vadodara. The model rockets are available in classes A, B, C, D and E in packs of three motors."- by Aerosport Association regarding the product's description.

Every solid rocket motor has a set thrust time graph one without the flight data and one with flight data. Following is the arbitrary graph between thrust and time of the E6-3 motor which is used for our rocket:

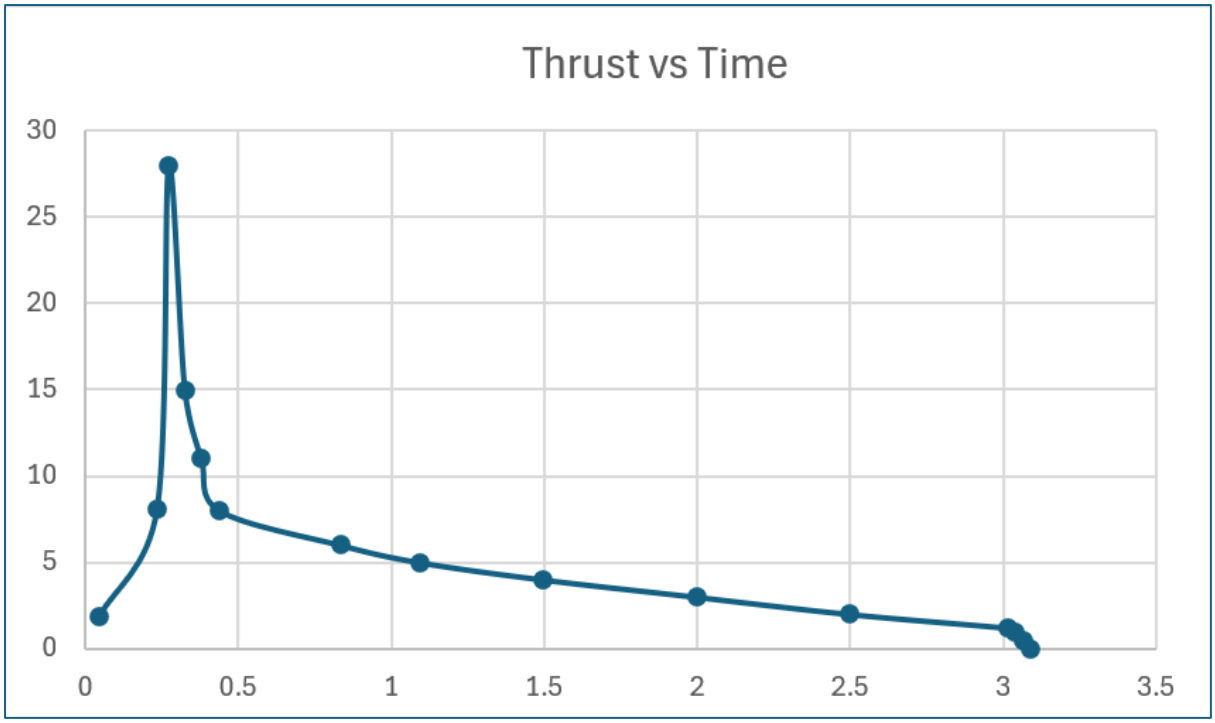

Figure 6 E6-3 Motor Thrust vs time curves

After multiple simulations and incorporating flight data every time testing the rocket motor the PID will be optimized for a better performance. These measurements are of utmost importance when simulating rocket behaviour, as they allow us to accurately predict the ideal mass and flight altitude.

The end goal is to achieve a height of 10-15 m also maintaining the stability to ensure safe speed when the rocket leaves the launch rail.

The reason for selecting this motor for our design is that it suits our launch range and type of rocket as well. The time required by the motor until it reaches the apogee is around 5 sec, the burnout time of the motor is 3.094 and the total time of the flight would be around 6 - 7 sec(s).

Finally, there will be usage of 2 rocket motors where one will support the ascent phase and the other will be ignited for the descent phase.

4.THRUST VECTOR CONTROL

4.1 Introduction

In the realm of rocket dynamics, the rotation occurs around the centre of gravity, while lift and drag forces exert their influence on the rocket's centre of pressure.

The Center of Pressure (CP) serves as an abstract focal point where the cumulative effect of all aerodynamic forces converges. It encapsulates the combined impact of various aerodynamic elements, from fins to the body and tip, simplifying the analysis of the rocket's behaviour by treating them as a unified force. Notably, its position is solely determined by the rocket's shape.

Conversely, the Centre of Gravity (CG), interchangeably referred to as the Centre of Mass (COM), represents the point where the rocket's weight can be concentrated. This pivotal point marks the equilibrium where gravitational forces acting on all parts of the rocket are in perfect balance and opposition.

The precise placement of the CG holds paramount importance as it dictates the stability of the rocket during flight. Should the CG be excessively forward, the rocket risks becoming nose-heavy, potentially leading to instability. Conversely, an overly rearward CG can render the rocket tail-heavy, also compromising its stability. Thus, maintaining the CG within a specific range is imperative to ensure the rocket's stability and straight trajectory.

Fundamentally, the rocket's stability hinges on the interplay between the centre of pressure and centre of gravity. When the centre of pressure lies beneath the centre of gravity, a restoring force manifests, compelling the rocket to revert to its original orientation following any minor deviation. This stability criterion can be physically validated by suspending the rocket from a string tied at its centre of gravity and observing its behaviour during oscillation.

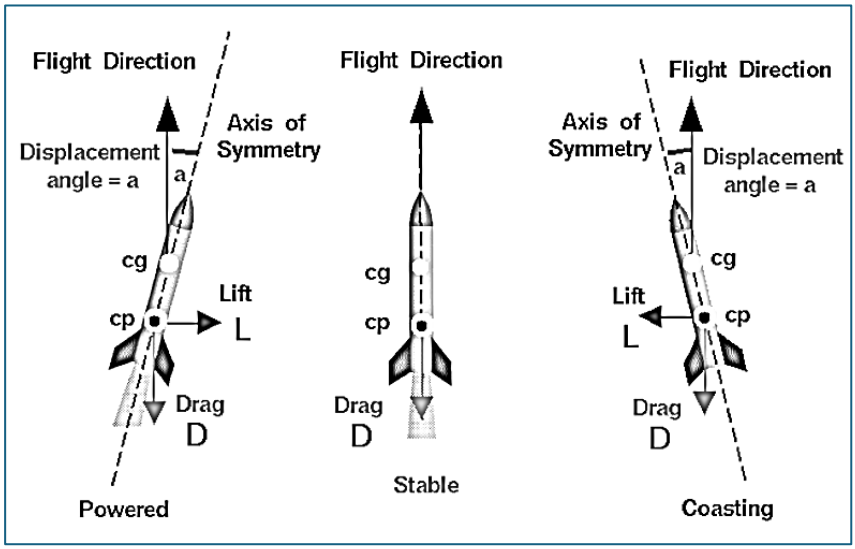

Figure 7 Rocket stability *(Dasilva, 2023)*

The image described above gives an example of rocket stability in model rockets where fins are attached, and stability is achieved. Due to the weight constraints the attachment of fins to the model rocket is beyond the scope of this project.

4.2 Rocket stability

The absence of fins during the initial peak of the flight would cause instability, resulting in the centre of pressure moving above the centre of gravity and making it difficult for the rocket to fly straight. This is particularly crucial since tuning the PID controller for the frequently changing thrust curve during the initial peak with the TVC locked can be a daunting task.

Following image represents the different examples of thrust vector control.

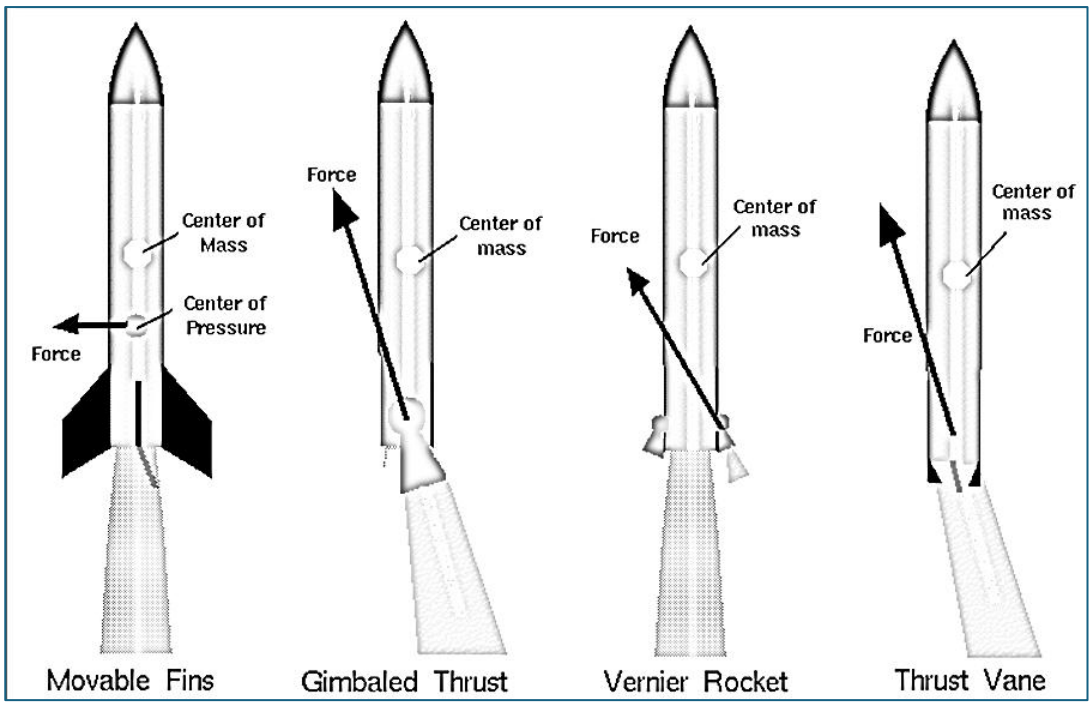

Figure 8

Examples of controls (Dasilva, 2023)

The intricacies of Thrust Vector Control (TVC) delve into the manipulation of both the rocket's Centre of Gravity (CG) and Centre of Pressure (CP). Through the deliberate adjustment of thrust vectoring, it becomes feasible to dynamically shift the positions of the CG and CP, thus refining the rocket's flight stability. This manipulation is realized by orchestrating the redirection of motor thrust in precise directions, inducing a moment that influences the rocket's mass. Consequently, this moment triggers rotational motion, effectively altering the rocket's trajectory to desired specifications.

Moreover, the versatility of TVC extends beyond mere trajectory adjustments. It serves as a potent tool for mitigating external forces encountered during flight, such as crosswinds or turbulence. By adeptly redirecting the thrust vector, TVC can counteract these formidable forces, preserving the rocket's intended flight path and enhancing overall control and stability.

Thus, TVC emerges not only as a mechanism for trajectory refinement but also as a strategic asset for navigating the unpredictable elements encountered in the aerospace domain.

The thrust vector mount that this project is using is designed on Fusion 360 software and 3D printed with the help of Ulti maker Cura software and the material PLA.

The thrust vector control mount is bound to correct the angle of the unit up to plus minus 5 degrees during its flight. This change in trajectory of the rocket aids in overall stability and continues linear movement of the rocket in the vertical direction against gravity. The diagram in the figure represents the type of TVC this project is using, i.e., the gimbaled thrust. The design makes use of 2 gimbals for the servo to function and tilt the rocket in two directions x and z.

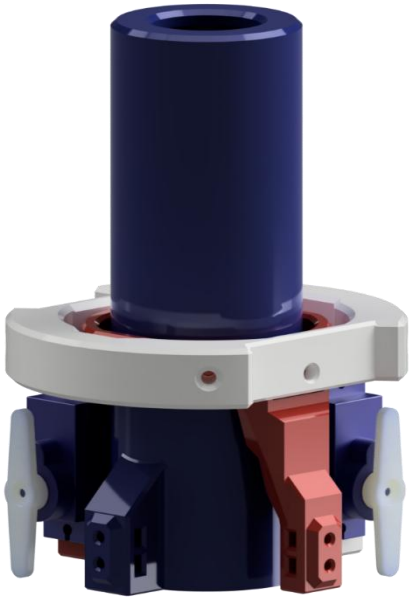

Figure 9 TVC Mount Design

Although the current model of the TVC Mount is suitable for the testing phase, there are several areas that could be improved to achieve a perfect design. By addressing these issues and implementing the suggested improvements, the TVC Mount can be optimized for better performance, functionality, and ease of assembly.

5. ROCKET BODY

5.1 Introduction

The rocket comprises a meticulously crafted ensemble of critical components, each playing a pivotal role in ensuring its successful flight:

• Rocket Body: The spatial relationship between the Thrust Vector Control (TVC), centre of mass, and flight computers exerts a profound influence on PID tuning and overall rocket stability, underscoring the importance of precise alignment.

• Flight Computer: Positioned as the central nervous system of the rocket, the flight computer orchestrates active control mechanisms and supervises servo movements with astute precision.

• TVC Mount with Servos: This dynamic component assumes responsibility for dynamically adjusting the direction of motor thrust, thus empowering precise rocket control and manoeuvrability.

• Rocket Motor: Tailored to meet our specific operational demands, the Klima solid Motor D3-P emerges as the optimal choice, boasting a burnout time of 6 seconds to facilitate our mission objectives seamlessly.

• Stand (Launch Pad): Serving as the steadfast anchor point prior to liftoff, the stand, ingeniously equipped with rocket screws, ensures the secure insertion of the rocket, laying the foundation for a successful launch.

Within the rocket body lies a symphony of five distinct segments:

• Cone: Crafted with aerodynamic finesse, the cone's sleek design minimizes air resistance, while tools like Open Rocket offer invaluable insights into the rocket's behaviour at lofty altitudes.

• Upper Tube: This segment serves as the bastion for the Flight Computer, providing a stable mounting platform for optimal functionality.

• Middle Tube: Elevating the rocket to greater heights, this segment enhances its overall stature, contributing to improved aerodynamic performance.

• Bottom Tube Up: Encompassing the servo mechanism, this section boasts ample width to facilitate unrestricted servo movement within the TVC Mount, ensuring seamless operation.

• Bottom Tube Down: Playing host to the TVC Mount, this segment serves as the fulcrum of thrust vector control, enabling precise adjustments to rocket trajectory with finesse and accuracy.

Figure 10 Rocket body (Name - GARUD)

5.2 Body weight

After the initial designs in FUSION 360 the thrust vector control, the body weight came around up to 680 g, i.e.,0.68 kg. For a vertically accelerating vehicle such as a rocket, the weight needs to be minimum as possible. This is one of the problems that modern day engineers stumble upon as they constantly look for materials which are anisotropic (strength to weight ratio is high).

The ideal weight of the thrust vector for a model rocket depends on various factors such as the size and weight of the rocket, the power of the engine, and the desired flight characteristics. The thrust vectoring system is typically designed to provide stability and control during flight by altering the direction of the rocket's thrust.

For a model rocket, the weight of the thrust vectoring system should be kept as low as possible to minimize the impact on the rocket's performance. It should also be strong and stable enough to withstand the forces experienced during flight.

There isn't a specific weight that applies universally since it varies depending on the specific design and requirements of the rocket. Designers typically aim to keep the weight of the thrust vectoring mechanism as a small percentage of the overall weight of the rocket, often aiming for less than 5-10% of the total weight.

Ultimately, the ideal weight will be determined through testing and iteration during the design and development process to ensure that the thrust vectoring system provides the necessary control without compromising the performance of the rocket.

The second design came with change in thrust vector unit as we go with a lighter version. Now the changed and estimated weight is 600 g, i.e.,0.6 kg.

The materials which we select for the body:

Table 1 Materials used in rocket body.

Sr.no.	Part of the rocket body	Material used
1.	Body tube	Cardboard
2.	Nose cone	PLA
3.	Thrust vector mount	PLA
4.	Landing legs	PLA
5.	Struts	PLA

5.3 Design and Dimensions

5.3.1 Rocket tube

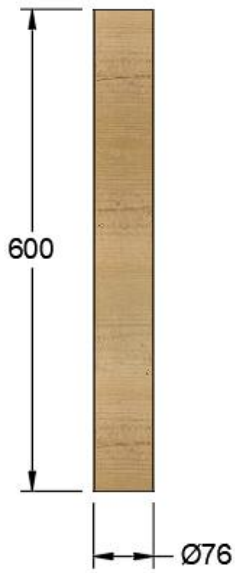

Figure 11Body Tube

5.3.2 Nose Cone

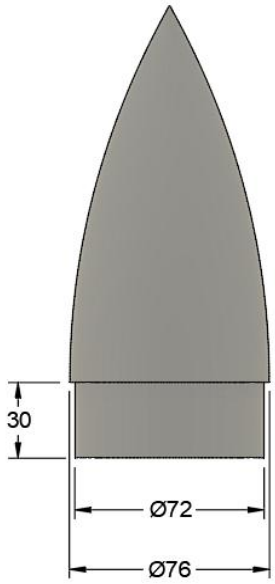

Figure 12 Nose Cone

5.3.3 Motor Mount

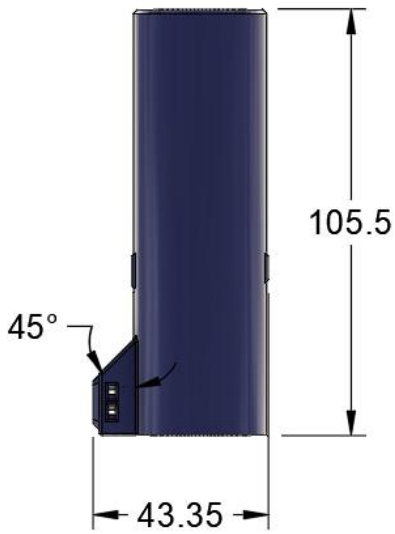

Figure 13 Motor Mount

5.3.4 Outer Gimbal

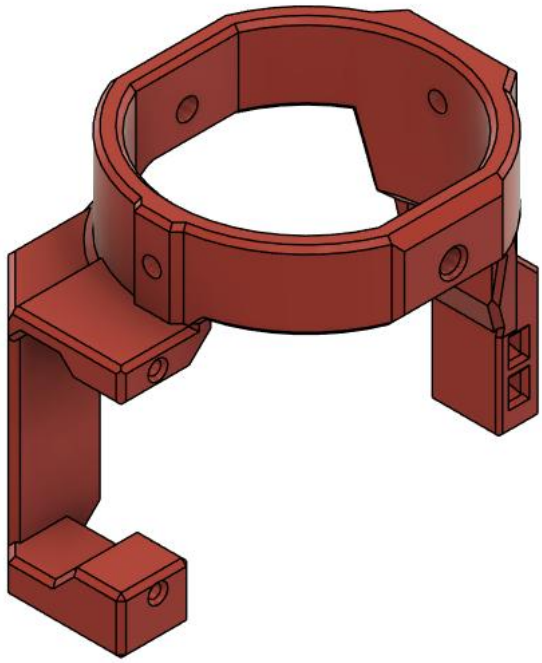

Figure 15 Inner Gimbal

5.3.5 Inner Gimbal

5.1 Printer setting

The next step in the printing process involved setting up the printer with the appropriate parameters. For printing with PLA, temperature range of 190-210°Cwas used, with the heating bed set to 50°C for the initial layer.

To ensure maximum strength, 50% infill was used for the TVC. However, for the holder and test stand, a 20% infill was sufficient. The choice of layer width depends on the printer, but for the TVC, it is recommended to use a smaller width to achieve accurate details and precise fit. A layer width of 0.2mm for the TVC was used. It is worth noting that smaller layer widths result in better detail but longer printing times. The rocket body was also printed with a

diameter of 0.2mm, resulting in a slightly rougher surface when using PLA, but it did not affect its functionality.

During the printing process, the speed was limited to a maximum of 60 m/s to minimize noise.

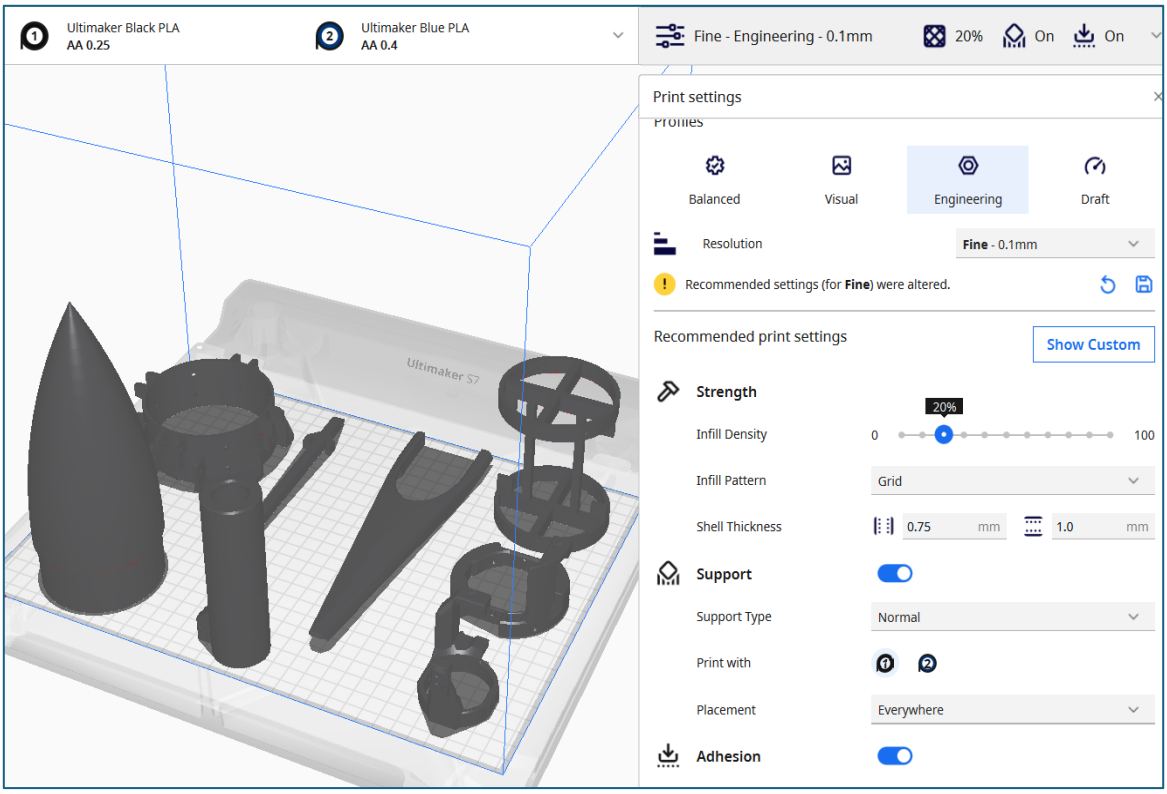

Figure 16 Ultimaker Cura Printer Settings

The image above represents settings for various components which were 3D printed by using PLA.

5.5 **Building the rocket body**

5.5.1 TVC Mount

To craft your TVC mount with precision, meticulously follow these steps:

To guide you in building your TVC mount with accuracy, it is important that each of these construction steps is undertaken with care:

1. First, care must be taken to ensure the bearings requiring fixing are closely inserted into the impressions created on the inner gimbal.
2. Then place the motor correctly at the place marked on the body of the robot the screws drive the motor tight making it stable and enabling the part to perform optimally.
3. Gently and carefully, align the bearings, through the outer gimbal so that they would provide the robot with the proper momentum that it needs to function as expected.
4. Next, the inner gimbal, which is equipped with bearing, have to be aligned with the outer gimbal part, designed specifically for this purpose and is capable of connecting the two parts without needing further fastening.
5. Tighten the screw to the outer gimbal to guarantee that it is firmly attached to work and at the same time, guarantee that the assembly you are making can withstand at least some amount of weight.
6. Fix the servos to their respective holders in a manner that would allow firm holding so as to avoid the servos to get misfit as well as having a proper connection.
7. : First, to simplify the work done at the next steps, you have to temporarily dismantle the arms of the servo at least for the time being.
8. Make sure to slide the push rods to the servo arms and then thread it through the motor tube and the inner gimbal as seen in the animation below.

9. Last of all, place the servo arms appropriately to the places where they were cut and screw the servo arms back into the servos to complete another important connection of this portion of the plane.
10. Install the motor within the motor tube with the help of thin slices of the paper to accurately position the motor, as well as enhance the overall functioning of the motor and its stability.

When organized methodically, each step will transform your TVC mount to replicate the arrangement shown in the following illustration as you prepare for the actual integration of the model into your rocketry activities.

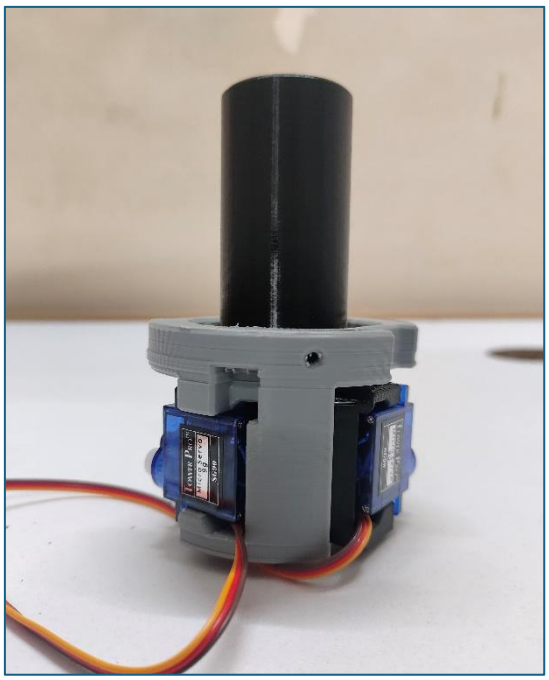

Figure 17 TVC mount

5.5.2 Calibration

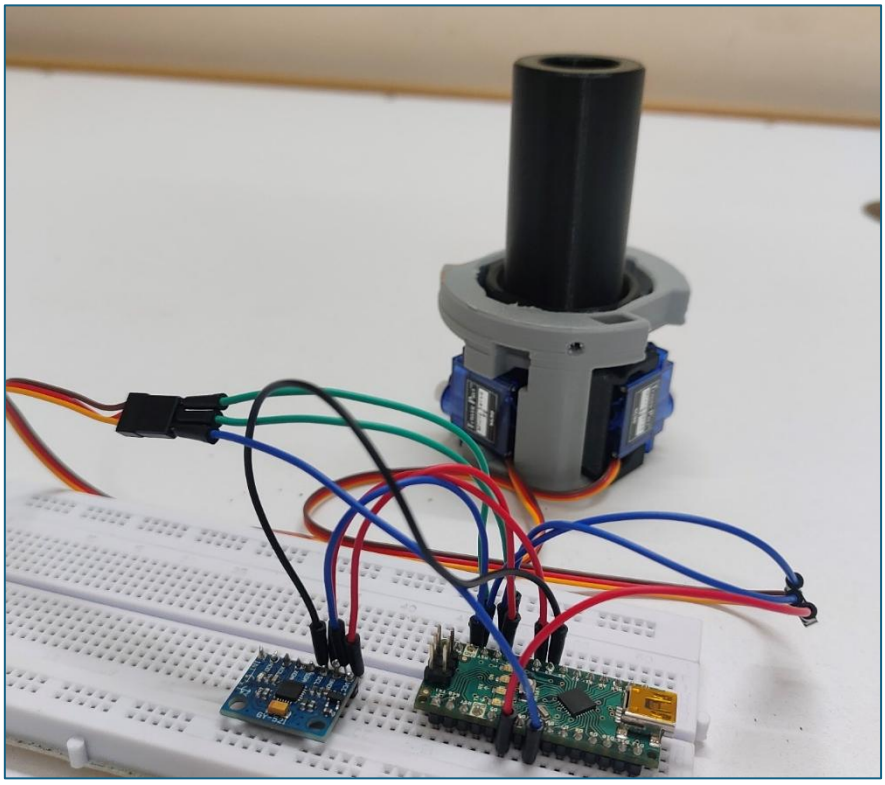

Figure 19 Calibrated Circuit with TVC Mount

The figure shows the connection between Arduino Nano, MPU6050 and TVC mount's servo motors and exact connection of the jumper wires, for e.g. GND to GND, VCC to D5, etc.

5.5.3 Moment of Inertia

Determining the Moment of Inertia for PID tuning requires a meticulous process with a fully assembled rocket prepared for flight. Here's a unique procedure tailored for accurate measurements:

Rocket Weight Assessment: Begin by meticulously weighing the entire rocket, inclusive of all components. This comprehensive measurement ensures precise data acquisition. Any discrepancies, such as missing batteries, can significantly impact flight dynamics.

Centre of Mass Identification (COM): Establish the centre of mass by systematically balancing the rocket at various points until stability is achieved. Once pinpointed, mark this pivotal spot with a distinctive indicator like duct tape or a suitable marker.

Vertical Suspension Setup: Employ a dual-string suspension mechanism to suspend the rocket vertically. Guarantee that both strings maintain equal distance from the COM, providing robust support to the rocket.

COM Distance Measurement: Precisely measure and document the distances from the COM to each string. These measurements are pivotal for discerning the moments exerted on the rocket during flight.

String-to-Surface Distance Determination: Accurately measure the gaps between the strings and the supporting surface (e.g., table) from which the rocket hangs. This data serves as a critical component in the calculation of moments around the centre of mass.

Oscillation Duration Determination: Initiate a controlled rotation of the rocket around its COM while maintaining the COM's stationary position. Observe and record the time required for a singular complete oscillation. For enhanced precision, capture the time for multiple oscillations and subsequently compute the average duration for one oscillation.

Moment of Inertia Computation: Utilize the amassed measurements and data to execute the requisite calculations. Incorporate mathematical methodologies to derive the Moment of Inertia, a fundamental parameter essential for PID tuning.

5.5.4 Landing legs

The mechanism which will aid in securing a safe landing of the rocket is that of the landing legs. The landing legs mainly comprise of the following:

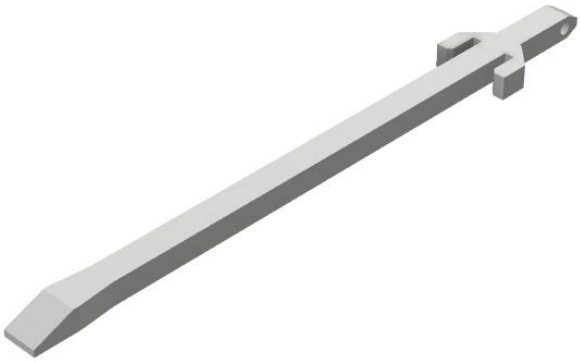

Figure 20 Struts

Figure 21 Landing Leg

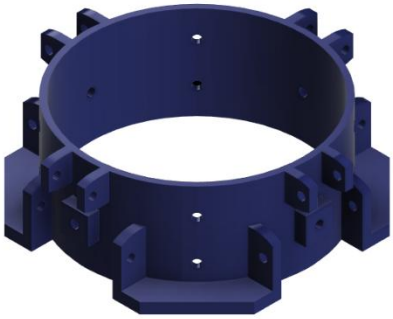

Figure 22 Attachment ring

Figure 23 Landing legs

As seen in figure 23, the landing legs deploy upon firing the rope and all the above-mentioned parts are assembled beforehand using screws and nuts. The main factor in selecting this design was to ensure level padding and safe landing of the TVC model rocket.

These components are assembled with the help of screws and the material used is PLA.

Figure 24 Inside of the Rocket body

The assembly of the rocket body goes as follows:

- Breadboard assembly which includes Arduino Nano, MPU 6050, BMP280 and SD card.
- The jumper wires are attached to each port according to the PCB design.
- This is held together using a support which is designed on FUION 360, and 3D printed using the material PLA.
- Next is TVC, where we assemble the servo motors and fit the mount along with the 2 motors.

  Note: The motors are friction fit together using a PLA slot.

6. AVIONICS

6.1 Introduction

Avionics in a TVC (Thrust Vector Control) model rocket serve a critical role in managing and optimizing its flight dynamics, offering precise control and stability adjustments during ascent and descent. Here's a detailed exploration of avionics integration tailored specifically for a TVC model rocket:

When a TVC (Thrust Vector Control) model rocket in the air, avionics become indispensable in commanding the flight and making necessary adjustments to the attitude and the position, providing for better precision and manoeuvrability during the ascent and the descent. Here's a detailed exploration of avionics integration tailored specifically for a TVC model rocket: Here’s a detailed exploration of avionics integration tailored specifically for a TVC model rocket.

1. TVC Actuation and Control: indeed, avionics systems in a TVC model rocket system are designated for managing thrust vector control brightened mechanism. Feedback mechanism based on the different sensors like gyroscopes, accelerometers, and magnetometers regulates the variations from the preset flight path. Though the avionics compute control commands in no time, that responds to the real time feedback, alluding in the rocket stays on target course.

2. Feedback Loop Optimization: Throughout the flight, avionics constable the spacecraft's orientation, and motion. As they send this data to the closed-loop system, the lunar lander automatically responds to disruptive forces. Such algorithms, which are deep within the avionics, read the information collected from the sensors to generate corresponding corrective commands, and in real time, alter the direction of the rocket's thrust vector so it can resist the impacts and maintain the stability.

3. Real-Time Attitude Estimation: Computers in aircraft hold highly advanced algorithms to determine spacecraft attitude in three dimensions. Through fusion of inputs from number of sensors such as gyroscopes and accelerometers, the control systems use this data to calculate the rocket's pitch, yaw, and roll angles to they can guide the actuator sensors appropriately.

4. Thrust Modulation and Optimization: The avionic systems bring more enhancement and control over the rocket's thrust output at finer resolution, the power of which can be adjusted according to a mission's requirements and the surrounding environment conditions. An avionics system controls thrust magnitude and adjusts direction based on the information from sensors. This way, the propulsion is optimized, and the flight can be made more efficient all the time during the whole flight.

5. Stability Augmentation: Avionics with stability augmentation algorithms introduced to facilitate the rocket's full control range against the shock uplifts or atmospheric turbulence that may arise from the external forces comes in. Using variable propulsion systems, whose vector of thrust is responsive precisely to the appearance of perturbations, one can get stability and accuracy of trajectory realization. In this case the mission will always be successful.

6.Fail-Safe Mechanisms: Avionics are the systems that are used to make the aviation industry safe by ensuring the availability of in-the-air mistake reduction or failure detection mechanisms. Provision of excess sensors, actuators, and repairers of control logic is achieved, with those protecting against possible system breakdowns that may require activation of emergency procedures or flight termination.

7.Mission-Specific Profiles: The avionics enable the development of the unique flight geometry corresponding to the defined purpose of the mission where different task could

be chosen including altitude optimization, trajectory targeting, and payload deployment, etc. Programmable hurt frame guidelines allow any flight performance to be suitably adjusted to accommodate specific mission needs.

8. Data Logging and Analysis: Avionics permit data logging and linkage features which record the flight data as well as various performance metrics like flying time, engine performance, etc. for post-flight analysis. This data thus allows engineers and researchers to appraise the efficacy of TVC control systems, tune the FCS parameters, and continuously develop these systems.

9. It is a cutting-edge flying model rocket that is configured with the most sophisticated avionics systems possible, aiding its agility, ability to manoeuvre, and increase in flexibility above the other platforms. This makes the model rocket the most accommodating for research, exploration, and education in rocketry and aerospace engineering.

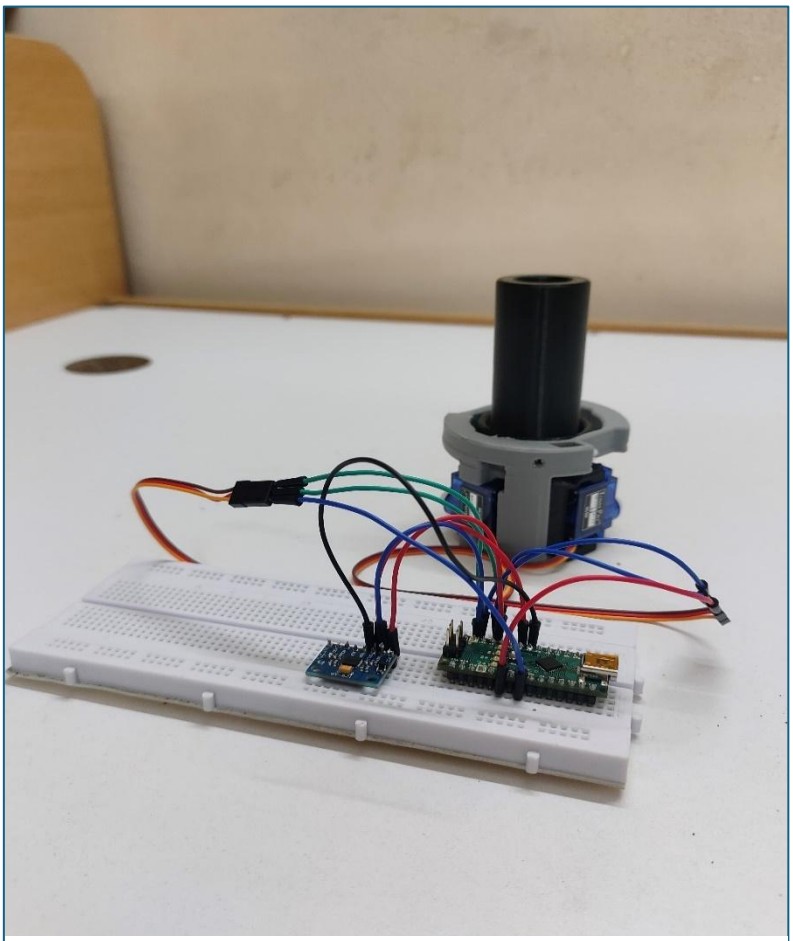

Figure 25 Avionics

6.2 Barometer

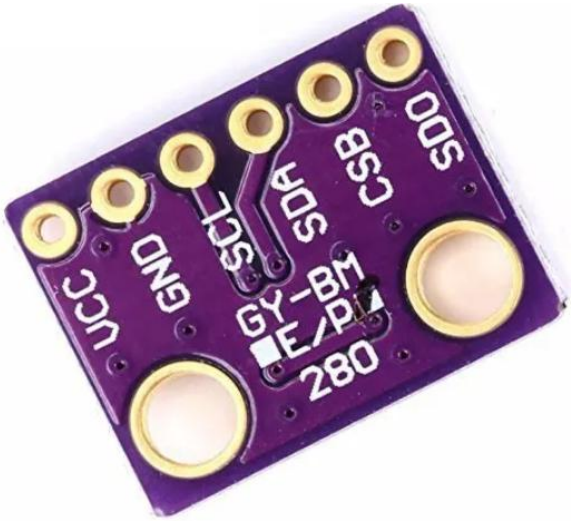

Figure 26 Barometer

This module uses an environmental sensor manufactured by Bosch with temperature, a barometric pressure sensor that is the next generation upgrade to the popular BMP085/BMP180/BMP183 Sensor. This sensor is great for all sorts of weather sensing and can even be used in both I2C and SPI; This precision sensor from Bosch is the best low-cost, precision sensing solution for measuring barometric pressure with ±1 hPa absolute accuracy, and temperature with ±1.0°C accuracy. Because pressure changes with altitude and the pressure measurements are so good; you can also use it as an altimeter with ±1 meter accuracy.

The BMP280 is the next-generation of sensors and is the upgrade to the BMP085/BMP180/BMP183 – with a low altitude noise of 0.25m and the same fast conversion time. It has the same specifications but can use either I2C or SPI. For simple easy wiring, go with I2C. If you want to connect a bunch of sensors without worrying about I2C address collisions, go with SPI.

Table 2 Barometer specifications

Length (mm):	15
Width (mm):	12
Height (mm):	2
Weight (g):	2
Shipping Weight	0.005 kg
Shipping Dimensions	9 × 7 × 5 cm

Table 3 Barometer technical data

Parameter	Technical data
Operation range	Pressure: 300...1100 hPa Temperature: -40…85°C
Absolute accuracy **(950...1050 hPa, 0…+40°C)**	~ ±1 hPa
Relative accuracy **p = 700…900hPa** **(Temp. @ 25°C)**	± 0.12 hPa (typical) equivalent to ±1 m
Average typical current consumption (1 Hz data rate)	3.4 µA @ 1 Hz
Average current consumption (1 Hz data refresh rate)	2.74 µA, typical (ultra-low power mode)
Average current consumption in sleep mode	0.1 µA
Average measurement time	5.5 msec (ultra-low power preset)
Supply voltage VDDIO	1.2 ... 3.6 V
Supply voltage VDD	1.71 ... 3.6 V
Resolution of data	Pressure: 0.01 hPa (< 10 cm) Temperature: 0.01° C
Temperature coefficient offset **(+25°…+40°C @900hPa)**	1.5 Pa/K, equiv. to 12.6 cm/K
Interface	I²C and SPI
Package dimensions	8-Pin LGA with metal 2.0 x 2.5 x 0.95 mm³

6.3 INERTIAL MEASUREMENT UNIT

MPU-6050 Triple-Axis Accelerometer & Gyroscope Module

The MPU6050 is an IMU (Inertial Estimation Unit) sensor, a portion of the Micro-Electro-Mechanical Systems (MEMS) family. It highlights a 3-axis accelerometer and a 3-axis gyroscope. The MPU6050 module in addition called a magnetometer sensor.

It can identify acceleration up in three measurements (X, Y, and Z) and measure angular velocity around those axes. This motion-tracking device is often used in applications such as detecting the orientation of a device, detecting movement, and measuring angular velocity. The Inertial measurement unit sensor contains some additional circuitry for interfacing with a microcontroller or other device.

The MPU6050 offers precise tracking for both quick and gradual movements. It includes a user-programmable gyroscope with a full-scale range of ±250, ±500, ±1000, and ±2000°/sec (DPS). Additionally, it features a user-programmable accelerometer with a full-scale range of ±2g, ±4g, ±8g, and ±16g.

Key Features of MPU 6050 Module:

- I2C Digital Output of 6/9-axis Motion Fusion data in various formats such as Euler Angle, Quaternion, Rotation Matrix, or Raw Data.
- Chip built-in 16-bit AD converter, 16-bit data output.
- Voltage Range: 2.3V to 3.4V.
- Selectable Jumpers: CLK, FSYNC, AD0.
- Gyro: ±250 to ±2000dps sensitivity.
- Accelerometer: ±2g to ±16g programmable range.

- DMP™ Engine: Offloads Motion Fusion, sync, and gesture detection.
- Embedded Algorithms: Run-time bias and compass calibration.
- Digital Temperature Sensor: Output for temperature monitoring.

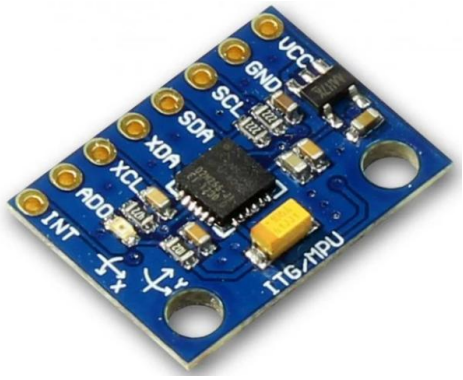

Figure 27 MPU 6050

6.4 3-Axis Gyroscope

The MPU6050 consist of 3-axis Gyroscope with Micro Electromechanical System (MEMS) technology. It is used to detect rotational velocity along the X, Y, Z axes as shown in below figure.

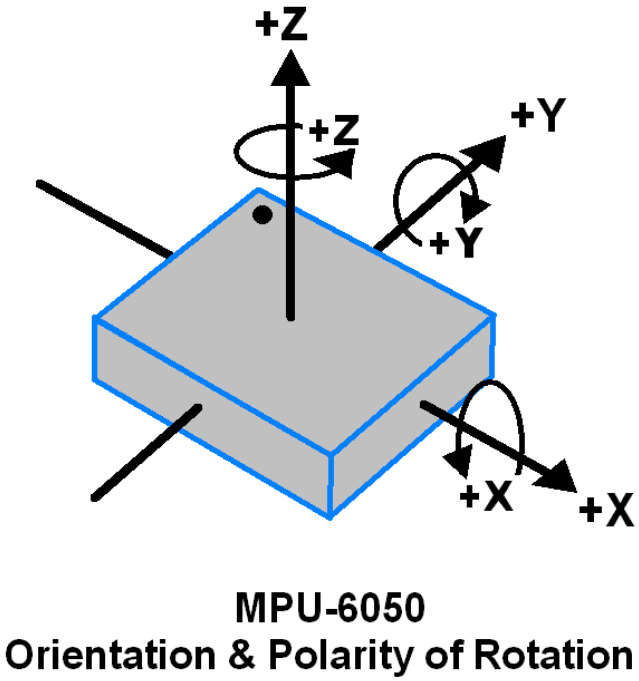

Figure 28 Polarity of MPU 6050

- When the gyros are rotated about any of the sense axes, the Coriolis Effect causes a vibration that is detected by a MEM inside MPU6050.
- The resulting signal is amplified, demodulated, and filtered to produce a voltage that is proportional to the angular rate.
- This voltage is digitized using 16-bit ADC to sample each axis.
- The full-scale range of output are +/- 250, +/- 500, +/- 1000, +/- 2000.
- It measures the angular velocity along each axis in degree per second unit.

6.5 3-Axis Accelerometer

The MPU6050 consist of 3-axis Accelerometer with Micro Electromechanical (MEMs) technology. It used to detect angle of tilt or inclination along the X, Y and Z axes as shown in below figure.

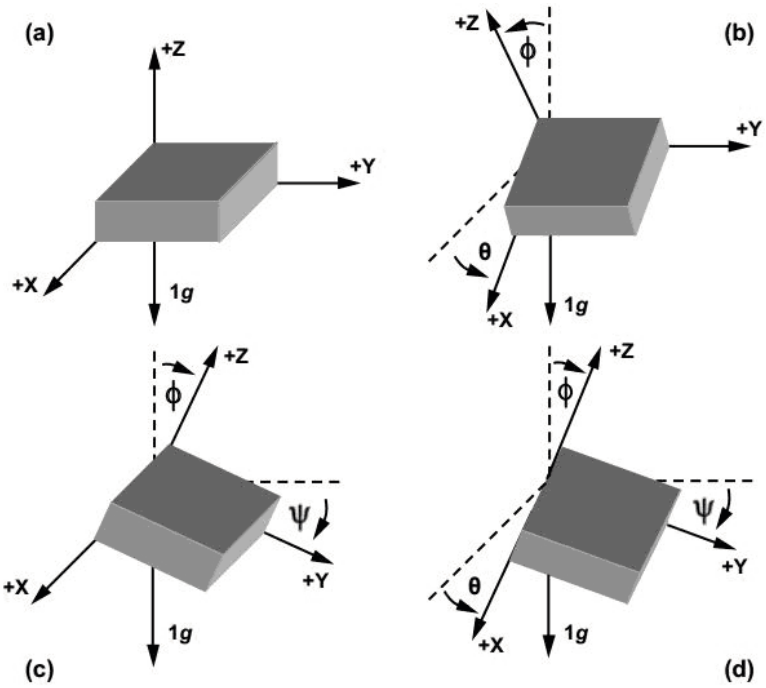

Figure 29 3 Axis accelerometer tilting

- Acceleration along the axes deflects the movable mass.

- This displacement of moving plate (mass) unbalances the differential capacitor which results in sensor output. Output amplitude is proportional to acceleration.

- 16-bit ADC is used to get digitized output.

- The full-scale range of acceleration are +/- 2g, +/- 4g, +/- 8g, +/- 16g.

- It measured in g (gravity force) unit.

- When device placed on flat surface it will measure 0g on X and Y axis and +1g on Z axis.

6.6 Specification of MPU6050 Sensor

Gyroscope:

- 3-axis sensing with a full-scale range of ±250, ±500, ±1000, or ±2000 degrees per second (dps)
- Sensitivity of 131, 65.5, 32.8, or 16.4 LSBs per dps
- Output data rate (ODR) range of 8kHz to 1.25Hz

Accelerometer:

- 3-axis sensing with a full-scale range of ±2g, ±4g, ±8g, or ±16g
- Sensitivity of 16384, 8192, 4096, or 2048 LSBs per g
- ODR range of 8kHz to 1.25Hz
- Temperature Sensor:
- Operating range of -40°C to +85°C
- Sensitivity of 340 LSBs per degree Celsius
- Accuracy of ±3°C

- Operating voltage range of 2.375V to 3.46V for the MPU-6050, and 2.375V to 5.5V for the MPU-6050A
- Communication Interface:
- I2C serial interface with a maximum clock frequency of 400kHz
- 8-bit and 16-bit register access modes

Other Features:

- Digital Motion Processor (DMP) for complex motion processing
- On-chip 16-bit ADCs for accurate analogue-to-digital conversion
- Programmable digital filters for improved noise performance
- Interrupts for triggering events based on specific motion conditions.
- Low-power consumption (3.9mA for full operation)

6.7 MOSFET

An advanced HEXFET power MOSFET like IRF540N is from International Rectifier that uses very complex processing methods to attain very low on-resistance for each 'Si' area. The main advantage is the quick switching speed, strong device design, and provide a very efficient, reliable device to the designer to use in different applications.

The TO-220 package is commonly chosen for commercial-based industrial applications. The fewer packages cost and less thermal resistance of this package will give to its broad acceptance all over the industry.

Figure 30 MOSFET

This IC is very flexible through its voltage and current switching capacities, so it is perfect for several electronic applications.

The working principle of IRF540 MOSFET is very simple, it includes three terminals namely source, drain & gate. Once we apply the signal at the transistor's Gate terminal, then both the terminals like drain & gate will be shorted. Whenever the Drain & the Gate gets shorted, then only we can get the preferred results, or else it will generate unnecessary outputs.

Features & Specifications

The **features and Specifications of IRF540N MOSFE**T include the following.

- N-Channel MOSFET with small signal
- Completely resistant against peak surge/ avalanche currents.
- Drain current (ID) is continuous like 33A at 25°c.
- The tolerance capacity of operating temperature is high like 175oCelsius.
- Pulsed Drain Current is 110A.
- Switching capacity is very quick.
- Gate threshold voltage Min is 2V.
- The technology used in this IC is cutting-edge, sophisticated.
- Gate threshold voltage Max is 4V.
- It is accessible in the To-220 package.
- Voltage from Gate to Source VGS is ±20V.
- It is used with the Arduino board because of its fewer thresholds current.
- Voltage from Drain to Source VDS is 100V.
- Very less resistance
- Time to Turn ON & OFF as 35ns.

6.8 SD Card Module

The module (MicroSD Card Adapter) is a Micro SD card reader module and the SPI interface via the file system driver, and microcontroller system to complete the Micro SD card read and write files. Users can directly use the Arduino IDE that comes with an SD card to complete the library card initialization and read-write. 3.3V voltage regulator circuit: LDO regulator output is 3.3V level converter chip, Micro SD card supply.

Level conversion circuit: Micro SD card into the direction of the signal is converted to 3.3V, MicroSD card interfaces to control the direction of the MISO signal is also converted into 3.3V, and a general AVR microcontroller system can read the signal. Micro SD card connector: a self: bomb deck, easy card insertion. Positioning holes: 4 M2 screws positioning hole diameter is 2.2mm, the positioning of the module is easy to install, to achieve inter-module combination.

Figure 31 SD Card

Table 4 SD card specifications

Power supply	4.5V – 5.5V, 3.3V
Positioning holes	4 M2 screws positioning hole diameter of 2.2mm
Control interface	GND, VCC, MISO, MOSI, SCK, CS
Dimension	45 x 28mm
Weight	6g

6.9 ARDUINO NANO

The **Arduino Nano** is an open-source breadboard-friendly microcontroller board based on the Microchip ATmega328P microcontroller (MCU) and developed by Arduino.cc and initially released in 2008. It offers the same connectivity and specs of the Arduino Uno board in a smaller form factor.[1]

The Arduino Nano is equipped with 30 male I/O headers, in a DIP-30-like configuration, which can be programmed using the Arduino Software integrated development environment (IDE), which is common to all Arduino boards and running both online and offline. The board can be powered through a type-B mini-USB cable or from a 9 V battery.

Specifications

- Microcontroller: Microchip ATmega328P
- Operating voltage: 5 volts
- Input voltage: 5 to 20 volts
- Digital I/O pins: 14 (6 optional PWM outputs)
- Analog input pins: 8
- DC per I/O pin: 40 mA
- DC for 3.3 V pin: 50 mA
- Flash memory: 32 KB, of which 2 KB is used by bootloader
- SRAM: 2 KB
- EEPROM: 1 KB
- Clock speed: 16 MHz
- Length: 45 mm
- Width: 18 mm

- Mass: 7 g
- USB: Mini-USB Type-B

6.10 Communication

The Arduino Nano has several facilities for communicating with a computer, another Arduino, or other microcontrollers. The ATmega328 provides UART TTL serial (5V) communication, which is available on digital pins 0 (RX) and 1 (TX).

An FTDI FT232RL on the board channels this serial communication over USB and the FTDI drivers (included with the Arduino firmware) provide a virtual com port to software on the computer. The Arduino software includes a serial monitor which allows simple textual data to be sent to and from the Arduino board. The RX and TX LEDs on the board flash when data is being transmitted via the FTDI chip and the USB connection to the computer (but not for serial communication on pins 0 and 1). A Software Serial library allows for serial communication on any of the Nano's digital pins. The ATmega328 also supports I2C and SPI communication. The Arduino software includes the Wire library to simplify use of the I2C bus.

Features:

1. 1 pair of TTL level serial transceiver ports RX / TX
2. Using Atmel Atmega328P-AU MCU
3. There is a bootloader installed in it.
4. Support USB download and Power.
5. Support for external 5V ~ 12V DC power supply.
6. It Supports power supply by a 9V battery.
7. Support ISP download.
8. Automatic reset during program download.
9. Power OK blue LED on the bottom.

Figure 32 Arduino Nano

10. Green (TX), red (RX), and orange (L) LED.
11. +5V to AREF jumper.
12. Autosensing/switching power input.
13. Small mini-B USB for programming and serial monitor.
14. ICSP header for direct program download.
15. Standard 0.1” spacing DIP (breadboard friendly).
16. Manual reset switch.

6.11 Servo motor

A servo motor is a closed-loop system that uses position feedback to control its motion and final position. There are many types of servo motors, and their main feature is the ability to precisely control the position of their shaft.

In industrial type servo motors the position feedback sensor is usually a high precision encoder, while in the smaller RC or hobby servos the position sensor is usually a simple potentiometer. The actual position captured by these devices is fed back to the error detector where it is compared to the target position. Then according to the error, the controller corrects the actual position of the motor to match with the target position.

The SG90 servo is a popular, small-sized, and inexpensive servo motor often used in robotics, RC (remote control) projects, and other DIY electronics projects.

Features:

- Lightweight and compact: Ideal for small-scale projects where space and weight are crucial.
- Cost-effective: One of the most affordable servo motors available.

- Easy to control: Compatible with various microcontrollers like Arduino, Raspberry Pi, and others.

Table 5 Servo motor specifications

Stall Torque	1.2kg·cm @4.8V, 1.6kg·cm @6V,
Operating Voltage	3.5 – 6V
No Load Current	100mA
Stall Current	650mA
Max Speed	60 degrees in 0.12s
Weight	9g

Figure 33 Servo motor

7. FLIGHT SOFTWARE

This chapter majorly focuses on the different software used by the rocket components and their functioning and integration which leads to successful testing and launch of the rocket body:

- Arduino IDE
- PID simulation
- EAGLE

The Arduino Integrated Development Environment (IDE) is a software toolkit that is used to literally write out the code that will be executed on an Arduino microcontroller. Besides, it provides a working environment in which a programmer can write the required code and compile as well as upload the same code to Arduino boards. Here's an overview of how it works: Here is the description of the process that will help to understand how it works:

Key Components of the Arduino IDE

1. Editor: This is the place where all your writing takes place it is described as sketches or where all the codes are written. Such tools use features like syntax highlighting, Smart I-Code, bracket navigator, auto indent for improved coding styles and easy coding.

2. Message Area: This is the part that displays any messages that are appropriate for the user to be told for example, errors.

3. Text Console: It has multitasking feature which creates different output of IDE carries number of lines, error message with appropriate Debugging report.

4. Toolbar: In general, it consists of check, upload, new, open, and save current sketch option link often present in the toolbar.

5. Sketchbook: The following is an optional directory within its structure, which is supposed to store all the sketches you have drawn with the aid of the application. From here, you can go to several other pages related to the WebStar project and govern your projects for it.

6. Menus: It should have options for further flexibility which in fact involves the possibilities to select the board type, the port, and the libraries.

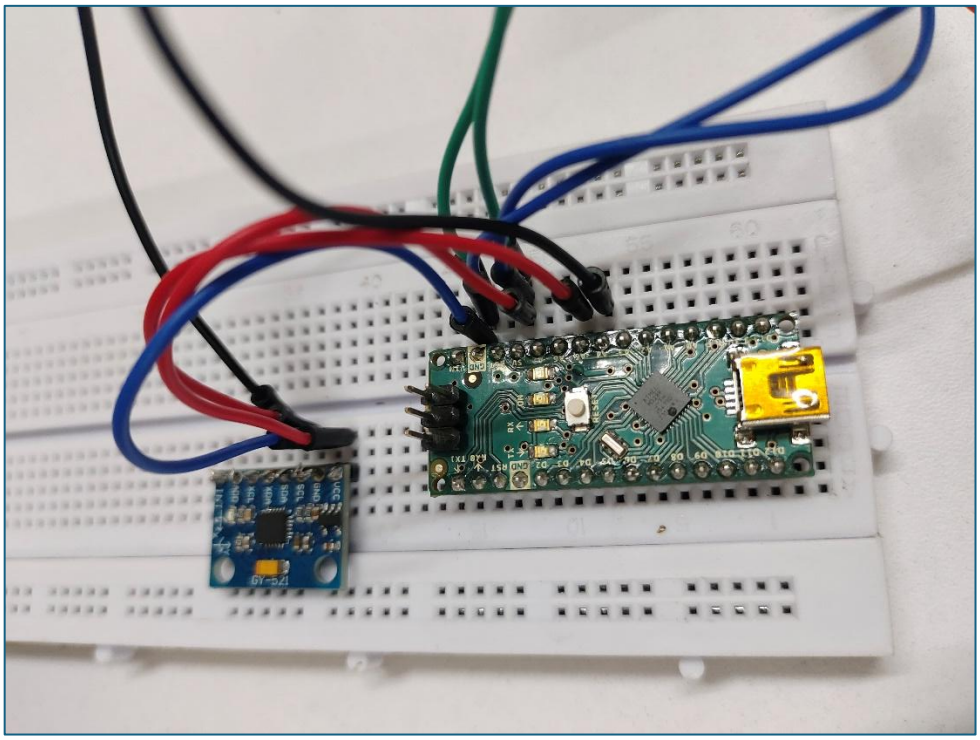

Figure 34 Calibration of Arduino Nano along with MPU 6050

7.1 Working of Arduino IDE

The Arduino boards need codes from its own language system to function. Arduino uses a variant of the C++ programming language. The code is written in C ++ with an addition of special methods and functions. Moreover, when you create a sketch (the name given to code files in this language, it is processed and compiled in machine language.

Table 6 Arduino Nano board specifications

Microcontroller	ATmega328
Architecture	AVR
Operating voltage	5 V
Flash Memory	32 KB of which 2KB used by bootloader
SRAM	2 KB
Clock speed	16 MHz
Analog IN pins	8
EEPROM	1 KB
DC current per I/O Pins	2 mA (I/0 Pins)
Input voltage	7-12 V
Digital I/O pins	22 (6 of which are PWM)
PWM Output	6
Power consumption	19 mA
PCB Size	18 × 45 mm
Weight	7 g

This table describes the specifications of Arduino Nano board E that is used in this TVC model rocket.

The main factor for using this board is its lightness, low power consumption and cost effective.

7.2 Schematic Diagram

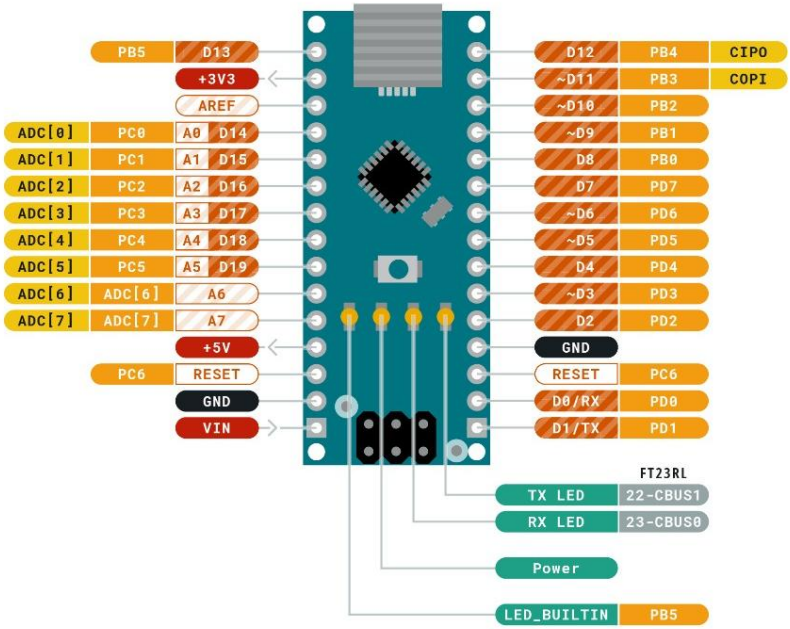

Figure 35 Schematic diagram of Arduino Nano

The diagram details the functions of each pin on the board, color-coded for clarity.

- *Ground (GND)*: Black

- *Power (VIN, +5V, +3.3V) *: Red

- *Analog Pins (A0-A7) *: Yellow

- *Digital Pins (D0-D13) *: Orange

- *Internal Pins*: Gray

- *LED Indicators (TX, RX, LED_BUILTIN) *: Green

- *Microcontroller Ports*: Brown

- *Other Pins (AREF, RESET) *: Pink

Each pin is labelled with its corresponding analog or digital identifier and microcontroller port name, facilitating the connection and programming of various components and sensors.

7.3 PCB Design

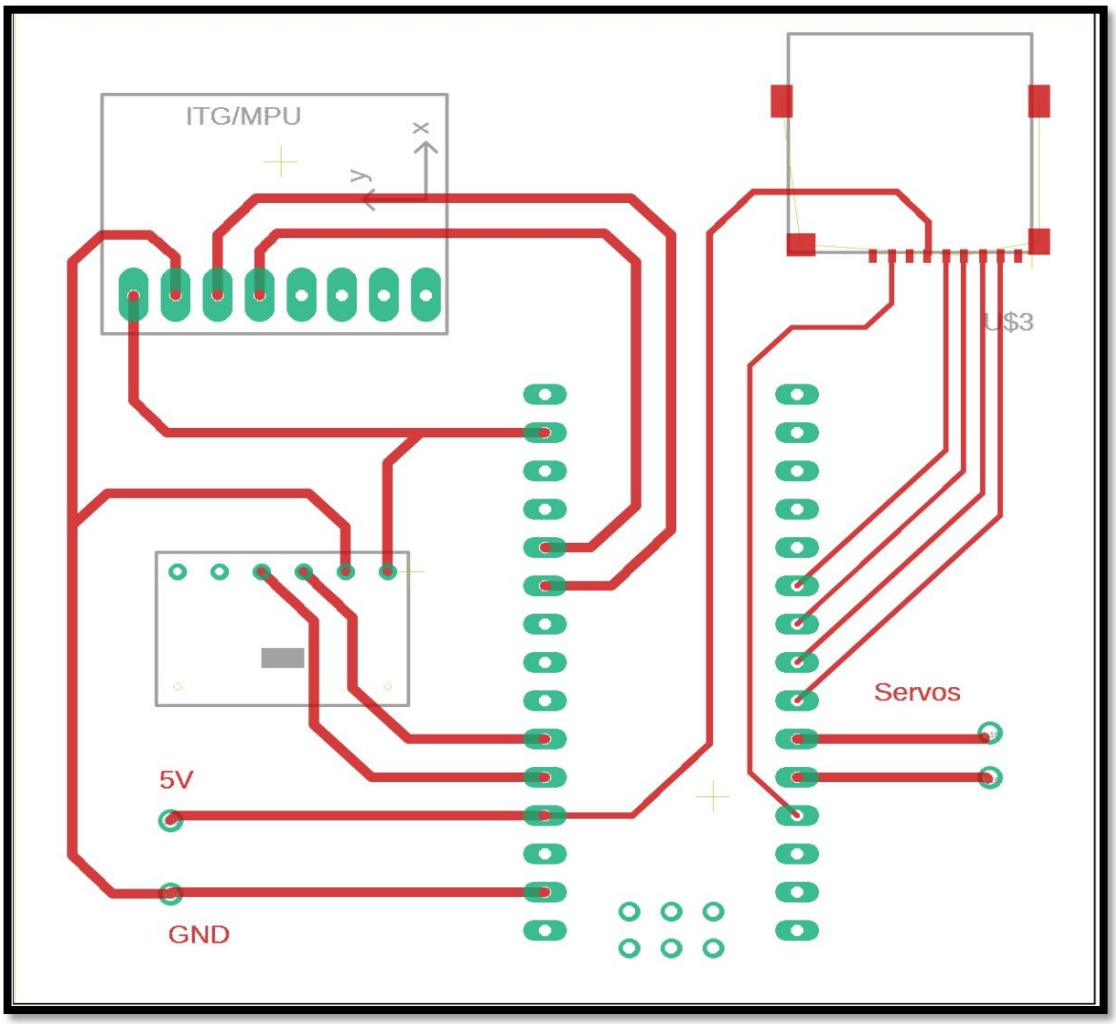

Figure 36 PCB Design

This image describes the layout diagram of PCB and helps as a reference to assemble different components on the breadboard and compile the code on Arduino IDE and test the working of every component.

7.4 Example of code

The Arduino IDE uses its own language to configure and calibrate the components via different codes. For example:

```
#include <Wire.h>
#include <I2Cdev.h>
#include <MPU6050.h>
#include <Servo.h>

MPU6050 mpu.
Servo servo1.
Servo servo2.

const int mosfetPin = 6.
const int pyroPin = 7.

int16_t ax, ay, az.
int16_t gx, gy, gz.

struct MyData {
  byte X.
  byte Y.
  byte Z.
};
```

```
MyData data.

int previous_errorX = 0.
int integralX = 0.
int errorX, errorY.
int proportionalX, derivativeX, proportionalY, derivativeY.
int outputX, outputY.

int previous_errorY = 0.
int integralY = 0.

float Kp = 1.0.
float Ki = 0.1.
float Kd = 0.1.

unsigned long startTime.

void setup () {
  Serial.begin(9600).
  Wire.begin().
  mpu. initialize();

  servo1.attach(3).
```

```
  servo2.attach(5).

  pinMode (mosfetPin, OUTPUT);
  pinMode (pyroPin, OUTPUT);

  if (! mpu.testConnection()) {
    Serial.println(F ("MPU6050 connection failed!"));
    while (1).
  }

  startTime = millis ();

  delay (1200000);
  digitalWrite (pyroPin, HIGH);
}

void loop () {
  unsigned long currentTime = millis ();
  float elapsedTime = (currentTime - startTime) / 1000.0.

  if (elapsedTime < 2.75) {
    digitalWrite (mosfetPin, HIGH);
  }
```

```
mpu. getMotion6(&ax, &ay, &az, &gx, &gy, &gz);

data.X = map (ax, -17000, 17000, 0, 255);

data. Y = map(ay, -17000, 17000, 0, 255);

data. Z = map(az, -17000, 17000, 0, 255);


Serial.print("MPU6050 - Axis X = ").

Serial.print(data.X).

Serial.print(“ Axis Y = ");

Serial.print(data. Y);

Serial.print(“ Axis Z = ");

Serial.println(data. Z);


int setpointX = 127.

errorX = setpointX - data.X.

proportionalX = errorX.

integralX = integralX + errorX.

derivativeX = (errorX - previous_errorX).

outputX = Kp * proportionalX + Ki * integralX + Kd * derivativeX.

previous_errorX = errorX.


int setpointY = 127.

errorY = setpointY - data. Y;

proportionalY = errorY.

integralY = integralY + errorY.
```

```
derivativeY = (errorY - previous_errorY).
outputY = Kp * proportionalY + Ki * integralY + Kd * derivativeY.
previous_errorY = errorY.

if (outputX < 50) {
  servo1.write(outputX + 90).
} else {
  servo1.write(50).
}

if (outputY < 50) {
  servo2.write(outputY + 90).
} else {
  servo2.write(50);
}

Serial.print("Servo1 position: ");
Serial.print(outputX);
Serial.print("  Servo2 position: ");
Serial.println(outputY);

delay(200)
```

This represents the flight computer of the whole TVC rocket.

8. Developing a Control Algorithm and Simulation for Thrust Vector Controlled Rockets.

Rocket modelling is the next step of precise manufacturing and the updated technology, which connected CAD app with 3D printing. Our masterpiece is endowed with a truly ground-breaking drooping nozzle system which, coupled with the flexibility of changing the thrust vector of up to 5 degrees in any direction, provides it with a leadership position in the field of propulsion controlling technologies.ID (Proportional-Integral-Derivative) controller, which is the core of the control architecture, is especially chosen for the ease of use, productivity, and adaptability. This highly effective control unit becomes a basis for trajectory maintenance by identification and suitable reaction on numerous flight conditions.

To enhance the rocket's onboard intelligence, we have a sophisticated flight computer, designed to the core to flawlessly operate the PID algorithm and to read, record and download flight data, and also oversee the engine mount control. Nonetheless, our voyage of simulation and optimization is the way to really take the advantage of the PID controller. Immerse into our customized MATLAB Simulink simulation which incorporates accurate modelling of airplane dynamics to recreate real-world flight conditions. Informing this digital reality, we fill out parameters like rocket mass and environmental parameters like wind speed thereby enabling us to come up with the most accurate flight trajectories.

As iterative simulation run, we start searching the most appropriate PID parameters within which we have received the highest stability, responsiveness, and performance while the flight is real. The last process is the fine-tuning stage which is the confluence between theory and practice allowing us to squeeze just enough efficiency out of our control system. Fundamentally, our strategy revolves around combining cutting-edge modelling with in-person tests in ensuring that every element of our rocket's functioning is honed to the highest optimal level. From CAD design to 3D printing and from the PID control to Simulink simulation,

trajectory of our development that we have taken has been incessant excellence in the aerospace engineering.

8.1 Introduction

Combination of rocket engines with gimbals, which is a substantial achievement, allows for several applications such as the precision control of the thrust Vector in experiments executed on different rocket platforms. Nevertheless, this is system complexity imposed by command and control of these gimbals, in addition to extremely severe conditions, such as high aircraft speed, heavy masses, and very high precision, which drives engineers' greatest challenges ever.

In this toil of developing software for controls of gyroscopes and rockets very sophisticated and multidimensional problems must be met. The mixing of immense velocities, precisely massive objects, and exact dependency on commands due to a limited time demands complex algorithms and sturdy control architectures. While voyages on drifting of currents of exploration are stretching out more and more spacecraft, complications in software become more numerous not by far, but by software design.

Moreover, the process of setting these feedback controllers makes this task more complex. Rocket flight is a true multi-factor phenomenon rather than an event performed in a strictly controlled environment with known influencing factors. For example, the factor can be atmosphere conditions, weight configuration, engine performance as well as engine trajectory, besides others. Every variable brings up a spinning wheel that has to be gone through, making the tuning procedure both hard and resource consuming.

Though, most commonplace, the TVC, the line between the idea, and implementation, is difficult to follow. The control system structure and tuning design constitute the most daunting obstacles, precisely since this ought to be carefully balanced between the consideration for improving performance and that for feasibility.

8.2 Control Theory

For the development of the GNC systems of the rockets we are analysing the possibility of using the PID controller, which really works entirely on a need-to-know basis, as its role here is evident and its vast application in the many industries makes the PID controller the key component of the control systems.Initially introduced as a feedback control device designed for use with the steam engines during the industrial r evolution, the modern controller which is known as PID has since become omnipresent and as a result it helped to considerably improve the efficiency of windmills, industrial processes and it served as a foundation and even a part of the autopilot system in commercial aircrafts. What deserves to be appraised is its unfailing manner that sometimes acts as the synonym to firmness and continuity in the processes that is dominated by the motions.

At the heart of the PID controller's efficacy lies its elegantly simple yet powerful algorithm, which governs system behaviour by dynamically adjusting three key parameters: featuring feedback gains, a horizontal input response curve, and stages of programming like proportional, integral, and derivative control. These values simultaneously work as separate levers to control the selective reaction component in the rocket constructing system. Thus, every rocket is assured to achieve its intended goal with accuracy.

The PID-Controller's distinguishing features are simplicity in structure with great adaptability qualities, therefore it is effective for using it in the rocket integrated guidance and navigation control process. Moreover, there are easy ways of tuning him by a change of the three sets of PID parameters and thus the efficiency and ability to conduct specific tasks are more manageable.

In fact, the method by which it marries the simplicity and efficiency is through PID controller that establishes a stable platform for making the complexity and dynamics found more manageable in the field of rocketry It is to demonstrate its dominant role in operation compared to other searching processes, hence builds on the pioneer control theory fundamental concepts which in turn creates the space for innovation and exploration in aerospace technology.

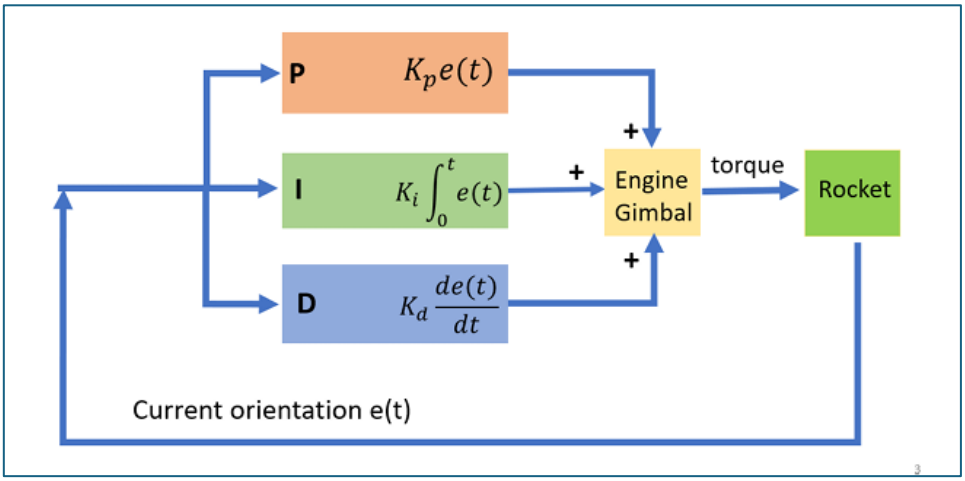

Figure 37 PID Equation (Iturregui, 2022)

This control algorithm allows for a simple integration and tuning process for all rockets of various sizes and purposes by adjusting three values. The PID controller is defined as

$$\mathbf{U(t) = K_p e(t) + K_i \int e\,(t)\,\Delta t + K_d \frac{de}{dt}}$$

Each time the flight computer goes through its control loop is what is its current angle with the vertical. If we say the rocket is pitched by ± 5 degrees so there's an error based on our reference

So when we look at our proportionality so there is a difference of 5 then we multiply by p gain and then internal gain is going to slow down and build up over time, so if we are 5 degrees for 10 then we would integrate 5 degrees pitch over 10 seconds and lastly our D term is our derivative and so that term is going to be looking at the change in error over time.

8.3 PID Controller

Among the coveted control instruments which the control engineers have in their knowledge chest, the PID (Proportional – Integral – Derivative) controller comes into the limelight since it is the controller that is mostly used for the regulation of critical process variables like temperature, flow, pressure, and speed in an industrial control system. A PID controller, that utilizes the principles of feedback mechanism and a loop, is a highly accurate, and stable phenomenon in modern control theory.

PID control is one of the best in industry known for its versatility and effectiveness. It acts like a hinge in the system by pushing drive system towards preset set points or parameters across the whole spectrum of settings. Its permeation goes beyond the individual global endeavours to incorporate industries, chemical processes, scientific experiments and automation projects.

On another note, PID consoles are a galaxy of solutions for meeting the needs of seeking the strict specification for positions and control parameters in precision applications, businesses, and systems. Its sustained discernibility and massive penetration highlight that structure as a prime component of today's Control Engineering Industry where it serves to improve operational effectiveness and process efficiency.

8.4 Simulink Parameters

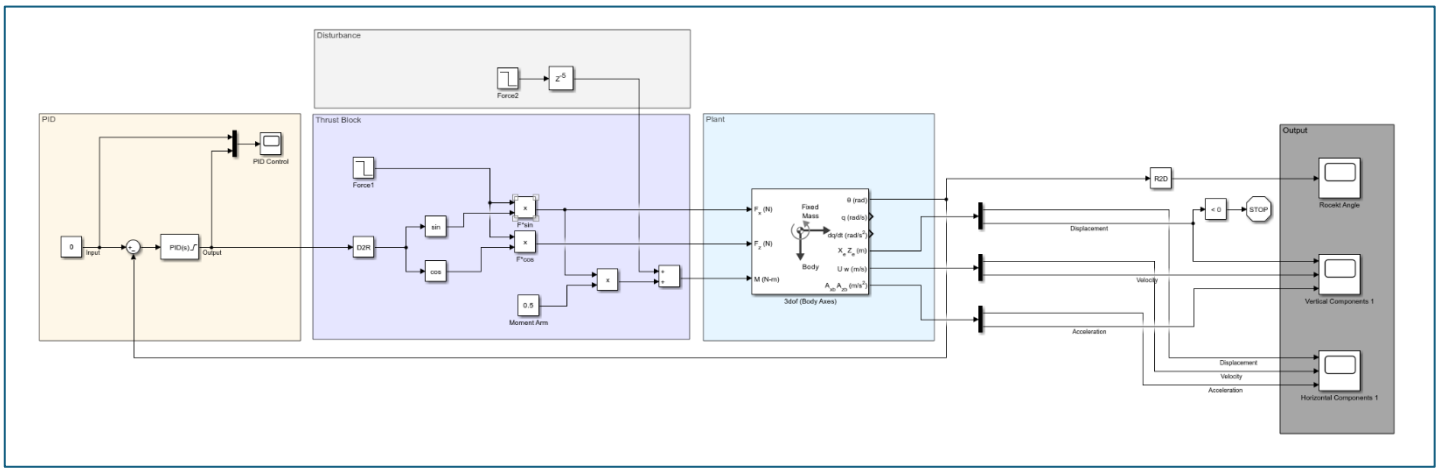

Figure 38 PID controller Simulink

The visual picture shown in this diagram is displaying a precisely formed Simulink scheme named elite system which is like a high complexity architecture. Ranging from controlling the dynamics of the system to the analysis of the behaviours with spot-on precision, the system elements work like a symphony of an orchestra bringing the regulating function of the system to the pinnacle.

This control model is deeply cantered on the PID (Proportional Integral Derivative) controller that is finely tuned to best regulate the system and meet with the already determined performance requirements. Employing more sophisticated feedback policy, the PID controller is indeed a paragon of control theory – both providing absolute robustness and making totally trustworthy at desired operating condition.

In the area right beside the PID controller the thrust block emerges as the main element that determine the precise computation of the moments and forces within the system. It is this essential element that gives the PI some sort of pelvic tilt, which enables the system to be manoeuvrable and prompt.

Our cybernetic model has plant inside it. The plant model is a complex system embodiment of how the physical system is interconnected. The plant model, which is based on the extreme minute detail and complexity of interactions, showcase in as much details as possible how the system behaves and reacts to different conditions.,Also, the imbalance block takes the critical role to simulate the foreign force that can be the representant of the outside influences that might jeopardize the system' equilibrium. By using small effects, it this part makes it possible to carry out a multi-level assessment of system's capabilities to stand and survive the real stresses and strains. The output block that completes the ensemble must be the standard of neural network robustness. From the lens of the block, the critical metrics are illustrated in a way that high-fidelity is guaranteed. Fire angle to displacement is among specific metrics that offer the in-depth deep insights into the system’s performance, allowing engineers to act upon the received data and make necessary changes and modifications.

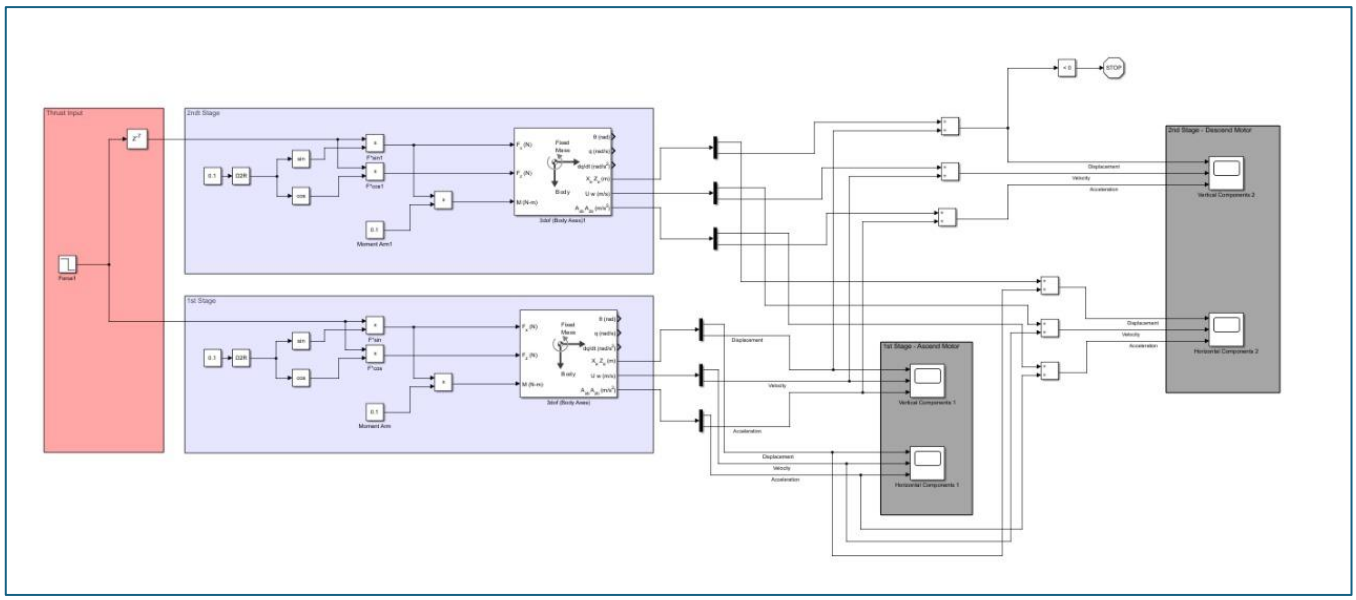

Figure 39 Two Stage control system

This image depicts a Simulink model of a two-stage control system. The model features a thrust input block that feeds into two stages: the first stage (bottom) and the second stage (top). Each stage includes blocks for calculating the forces and moments acting on the system, using trigonometric functions to resolve these forces into their components. Both stages are represented as rigid bodies with fixed masses, computing the system's displacement, velocity, and acceleration in response to the inputs.

The output blocks display key metrics for each stage, including vertical and horizontal components of displacement, velocity, and acceleration. This model aims to simulate and analyse the dynamic behaviour of a multi-stage system in response to thrust inputs.

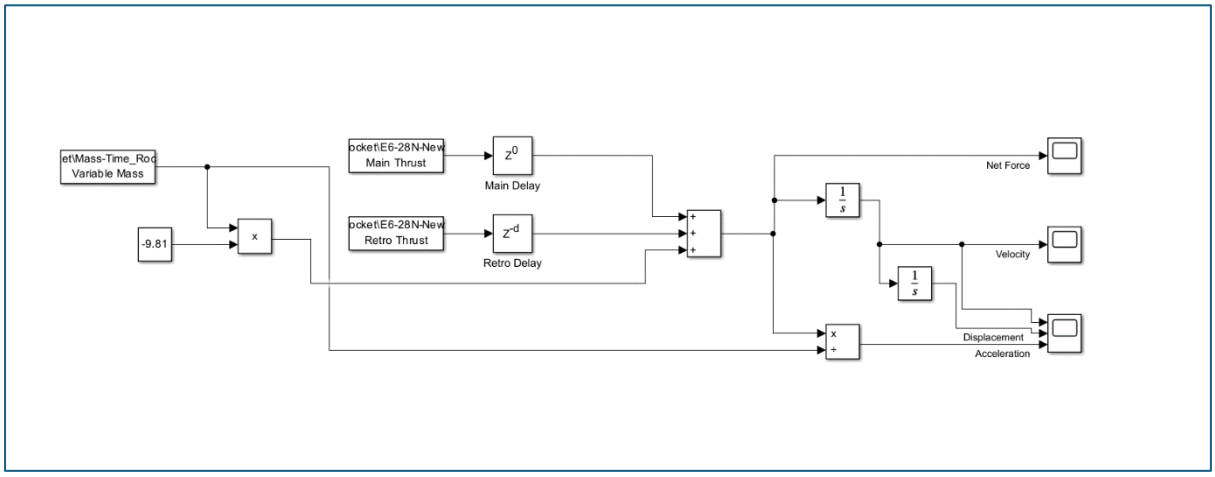

Figure 40 Delay Mechanism

The provided diagram is a Simulink block model representing the dynamics of a rocket with variable mass, subjected to main thrust, retro thrust, and gravity. Here's a detailed description of the system components and their interconnections:

The model is designed to simulate the dynamic behaviour of a rocket under the influence of variable thrusts and gravity, considering the delay in the thrust application and the changing

mass of the rocket over time. The outputs provide insights into the rocket's net force, velocity, displacement, and acceleration. Following image describes the output graph of the above

Simulink model:

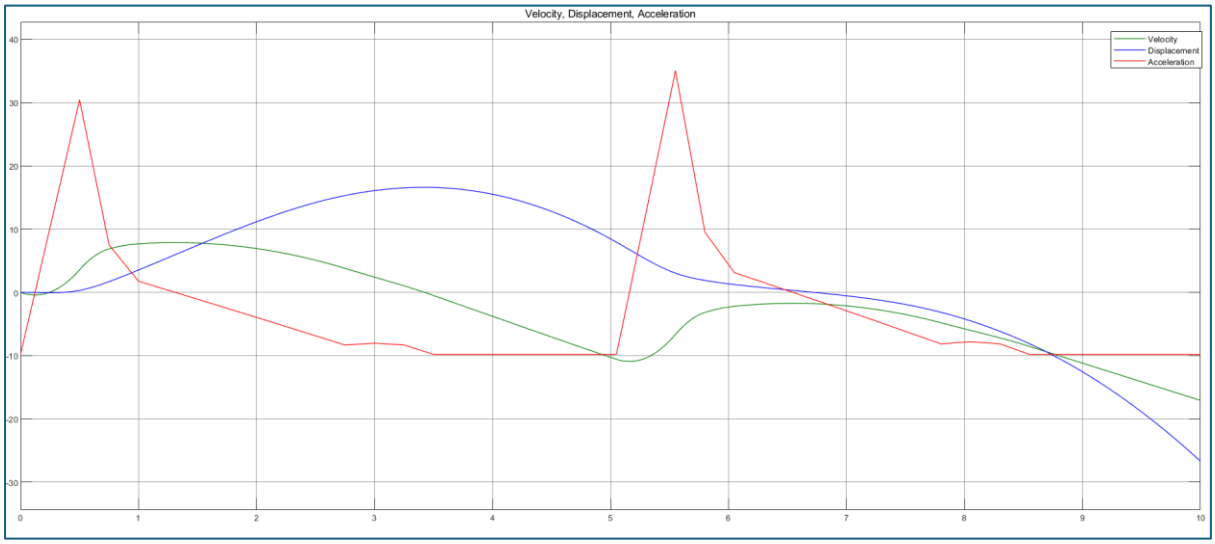

Figure 41 Graph Output

9.Rocket launch

9.1 Expected flight phases.

The flight is divided into five phases, including a landing phase. The points below illustrate an ideal flight.

• PHASE I – Liftoff: At this moment, the solid motor ignites, producing the highest thrust

throughout the flight. The rocket begins ascending towards its apogee.

• PHASE II – Apogee: The rocket reaches its highest point during the flight. The motor thrust peak.

is over, and the rocket starts a gradual descent.

• PHASE III – Descent: The rocket slowly descends while maintaining upright stability.

• PHASE IV – Burnout: The rocket's motor ceases burning, indicating that the rocket is close to the

ground.

• PHASE V – Landing: The rocket contacts the ground.

Before moving to the launchpad, the following tasks need to be completed:

1. Verify the centre position of the motor.
2. Check that the data is logging correctly.
3. Place the battery inside the rocket on the opposite side of the servos.
4. Ensure both servos are moving the motor within the range of -5° to +5°
5. Check whether the battery is fully charged.
6. Set up the cameras for each axis to record the flight.
7. Use measuring tools to ensure the stand is perfectly facing up, do not rely on visual estimation.
8. Assemble the rocket without inserting the SD Card.

9. Double-check that the rocket is assembled correctly.
10. Insert the SD Card.
11. Cover the SD Card with tape.
12. Connect the battery.
13. Secure the cables to prevent them from getting stuck in the TVC mount.
14. Reconfirm that the rocket is assembled correctly.
15. Calibrate BNO055 by moving the rocket in all directions.
16. Insert rocket inside the stand.
17. Immediately after the landing save the log file.

Figure 42 Launch ready GARUD

9.2 Results and Conclusion

The launch test of TVC model rocket GARUD was conducted on 30/5/24 at 11:13 am IST.

The estimated height through simulation was expected to be 11m but the rocket achieved an approximate height of 0.5 m during the launch.

The probable reason for not achieving expected results was found out to be accidental ignition of both the rocket motors simultaneously.

Figure 43 Ignition stage of the rocket

The captured image of GARUD during the ignition displays the high ignition that took place during the launch.,

Figure 44 Electronic Parts of the rocket body after the launch

As seen in the mentioned figure the electronic parts of the rocket body got burned up due to the high ignition.

9.3 Future scope

Thrust Vector Control (TVC) in model rockets offers several exciting future opportunities and developments, both in educational and practical aerospace engineering contexts. Here are some potential future scopes for TVC in model rockets:

1. Educational Advancements

- **Enhanced Learning Tools**: Developing more sophisticated TVC model rockets for educational purposes can provide hands-on learning experiences in physics, control systems, and aerospace engineering.
- **STEM Outreach**: TVC model rockets can be used in STEM outreach programs to inspire young students to pursue careers in science and engineering by demonstrating advanced control techniques in a tangible and engaging way.

1. Motor average thrust must be more, and peak thrust must be less. If the TVC rocket is able to achieve this, it will lead to better stability. Also, the time taken by the motor to completely burn out could be increased for better results.
2. Integrating a reaction wheel into a Thrust Vector Control (TVC) model rocket can significantly enhance its control capabilities. A reaction wheel is a type of actuator used to control the orientation of a spacecraft or rocket without using external thrusters. Here’s an overview of the potential benefits, implementation strategies, and future scope of using reaction wheels in TVC model rockets.
3. Auxiliary vanes, also known as control fins or aerodynamic surfaces, are additional control surfaces attached to a rocket to provide stability and control during flight. When combined with a Thrust Vector Control (TVC) system, auxiliary vanes can significantly enhance the manoeuvrability and precision of a model rocket. Here's a

detailed look at the potential benefits, implementation strategies, and future scope of using auxiliary vanes in TVC model rockets.

4. Canard control is an advanced aerodynamic control method that can significantly enhance the manoeuvrability and stability of a Thrust Vector Control (TVC) model rocket. Canards are small, forward-mounted fins or wings that can be actively controlled to influence the rocket's flight dynamics.

Figure 45 Canard control (Shang, 2022)

References

[1] apogeerockets, 2019. Cutaway of a solid rocket motor.

[2] Dasilva, M., 2023. Rocket Stability. *beginners-guide-to-aeronautics/rocket-stability*, 20 November.

[3] Hall, N., 2021. Solid Rocekt Engine. 13 May.

[4]Hall, N., 2021. Solid Rocekt Engine. *Nasa.gov.in*, 13 May.

[5]Iturregui, D. K. &. A., 2022. PID Equation. *Developing a Control Algorithm and Simulation for Thrust Vector Controlled Rockets*, 6 April, p. 4.

[6]Lukas, M., 2023. Estes Rocket motor curves. *Thrust Vector controlled Model rocket (Bachelor's Thesis),* p. 93.

[7] Shang, L., 2022. *Canard control vertical recovery guidance technology experimental rocket development.* s.l., s.n.

Products-

1.https://robu.in/product/towerpro-sg90-9g-mini-servo-9-gram/

2.https://howtomechatronics.com/how-it-works/how-servo-motors-work-how-to-control-servos-using-arduino/#google_vignette

3.https://robu.in/product/arduino-nano-board-r3-with-ch340-chip-wo-usb-cable-solderedarduino-nano-r3-wo-usb-cable-soldered/?gad_source=1&gclid=CjwKCAjw3NyxBhBmEiwAyofDYUe2-tYLfHQ64l_BH1JRcFrBmJq0e8PrR1PA-DaxcXDjT2CxECbKURoCuEwQAvD_BwE

4.https://docs.arduino.cc/hardware/nano/

5.https://www.elprocus.com/irf540n-mosfet/

6.https://alltransistors.com/mosfet/transistor.php?transistor=2422#google_vignette

7.https://dspace.cvut.cz/bitstream/handle/10467/109193/F3-BP-2023-Malek-Lukas-Vektorovani_tahu_modelu_rakety.pdf?sequence=-1&isAllowed=y

Theory-

1. https://supercomputingchallenge.org/21-22/finalreports/47/Supercomputing%20Final%20Report.pdf
2. https://digital.wpi.edu/show/c821gn050
3. https://www.omega.com/en-us/resources/pid-controllers#:~:text=A%20PID%20(Proportional%20%E2%80%93%20Integral%20%E2%80%93,variables%20in%20industrial%20control%20systems.
4. https://www.grc.nasa.gov
5. https://bps.space/
6. https://www.spacerecta.o-r.kr/