CIA – 3

PROJECT TITLE

DYNAMIC MODELING AND PERFORMANCE STUDY OF A DC MOTOR FOR DRONE USE

Course:
Drone Technologies and its Transformative Applications

DEPT:
ROBOTIC AND MECHATRONICS ENGINEERING

Submitted by:

RAVI TEJA	2362863
CHINMAY K	2362864
KRISHNA VAMSI	2362865
DARSHAN R	2362866

AIM :

To develop a mathematical model and simulate the speed–torque characteristics of a DC motor used in drone propulsion using simulation software and analyze motor behavior under different load conditions.

Introduction :

Drones have become an important technology in many modern applications such as aerial photography, agriculture monitoring, surveillance, delivery systems, and disaster management. The performance of a drone mainly depends on its propulsion system, which generates the thrust required for flight. A reliable and efficient motor is therefore a key component in drone design.

A DC motor is commonly used in small aerial vehicles because of its simple construction, easy control, and good speed–torque characteristics. The motor converts electrical energy from the battery into mechanical rotation, which drives the propellers of the drone. The rotation of the propellers produces thrust that allows the drone to lift off, hover, and move in different directions.

However, during flight the motor operates under different load conditions. Changes in air resistance, payload, and propeller dynamics can affect the load torque acting on the motor shaft. These variations influence the motor speed and overall performance of the drone.

Mathematical Model of DC Motor :

Electrical Equation

$V = L\,(di/dt) + Ri + Ke\omega$

Mechanical Equation

$J\,(d\omega/dt) = Kt\,i - TL$

Where:

V = Applied Voltage
R = Armature Resistance
L = Armature Inductance
i = Armature Current Ke
= Back EMF constant
Kt = Torque constant
J = Rotor inertia TL
= Load torque
ω = Angular speed

Simulation Model :

The simulation model of the DC motor is developed using electrical and mechanical components. The model consists of:

- Voltage Source
- DC Motor
- Load Torque
- Inertia
- Speed Sensor
- Output Graph

The voltage source supplies electrical energy to the motor. The motor converts electrical energy into mechanical rotation. Load torque represents the propeller load of the drone

Simulation Procedure :

1. Open the simulation software
2. Create a new model workspace.
3. Insert the DC motor model.
4. Add voltage source to supply input voltage.
5. Connect mechanical load to the motor shaft.
6. Add sensors to measure motor speed.
7. Set motor parameters.
8. Apply different load torque values.
9. Run the simulation.
10. Observe speed–torque characteristics.

Motor Parameters Used:

PARAMETER	MEANING	VALUE
R	Armature resistance	1Ω
L	Armature inductance	0.5H
Kt	Torque constant	0.01Nm/A
Ke	Back EMF constant	0.01V/(rad/s)
J	Rotor inertia	0.01 kg·m²
B	Viscous friction co-efficient	0.1 N·m·s

Results :

The simulation results show that the speed of the motor decreases when the load torque increases. This relationship represents the typical speed–torque characteristic of DC motors. Understanding this behavior helps in selecting suitable motors for drone propulsion systems.

EXPECTED OUTPUTS:

FIG: 1
BLOCK DIAGRAM

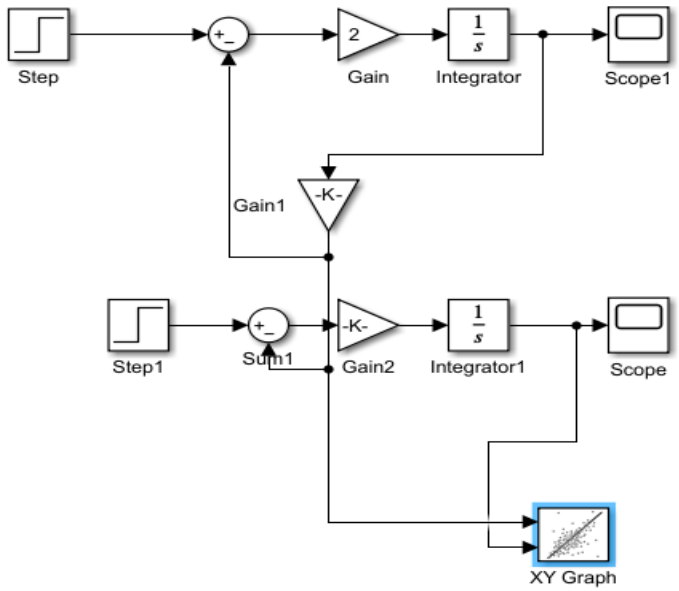

FIG: 2
SPEED VS TIME

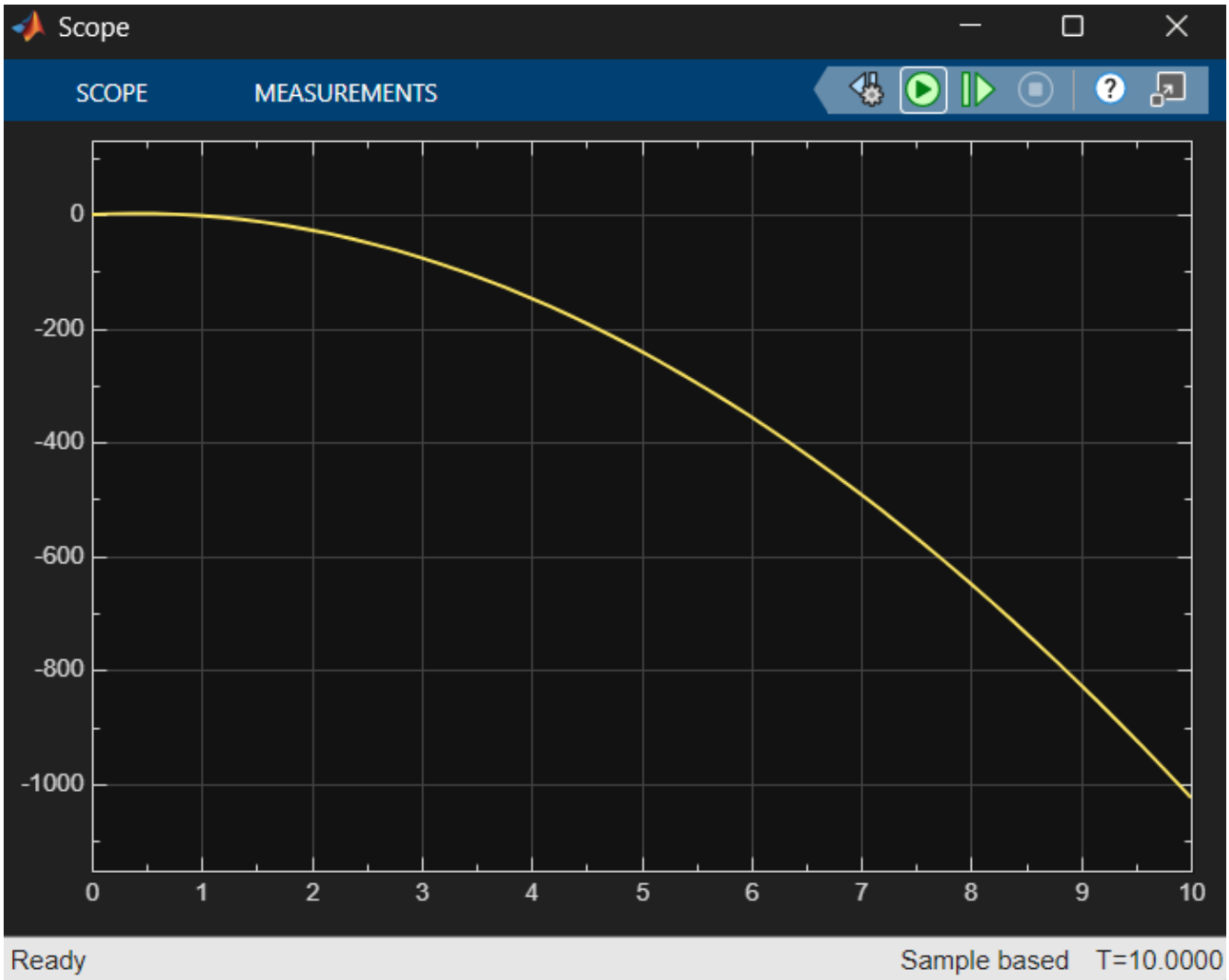

FIG: 3
CURRENT VS TIME

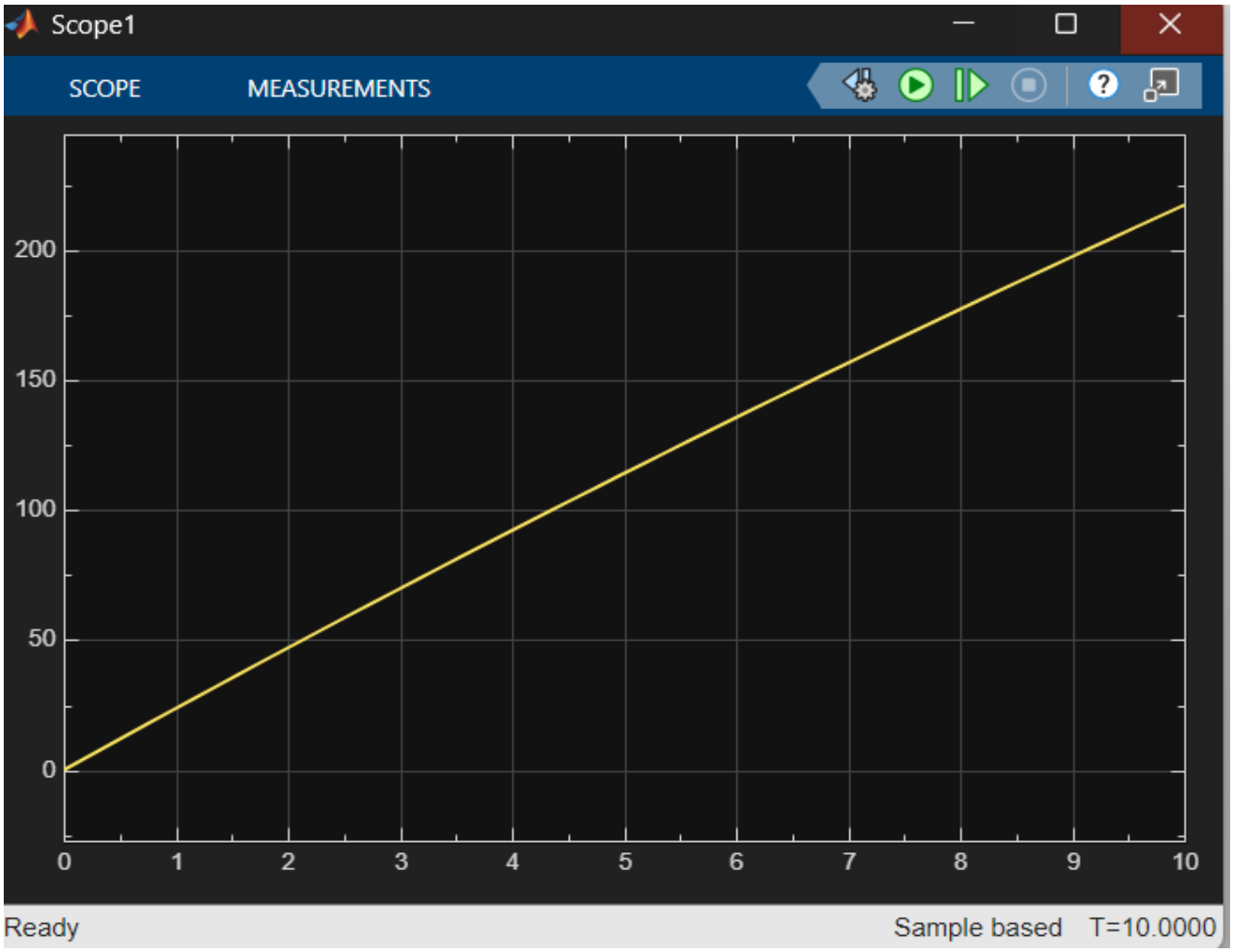

FIG: 4
TORQUE VS SPEED

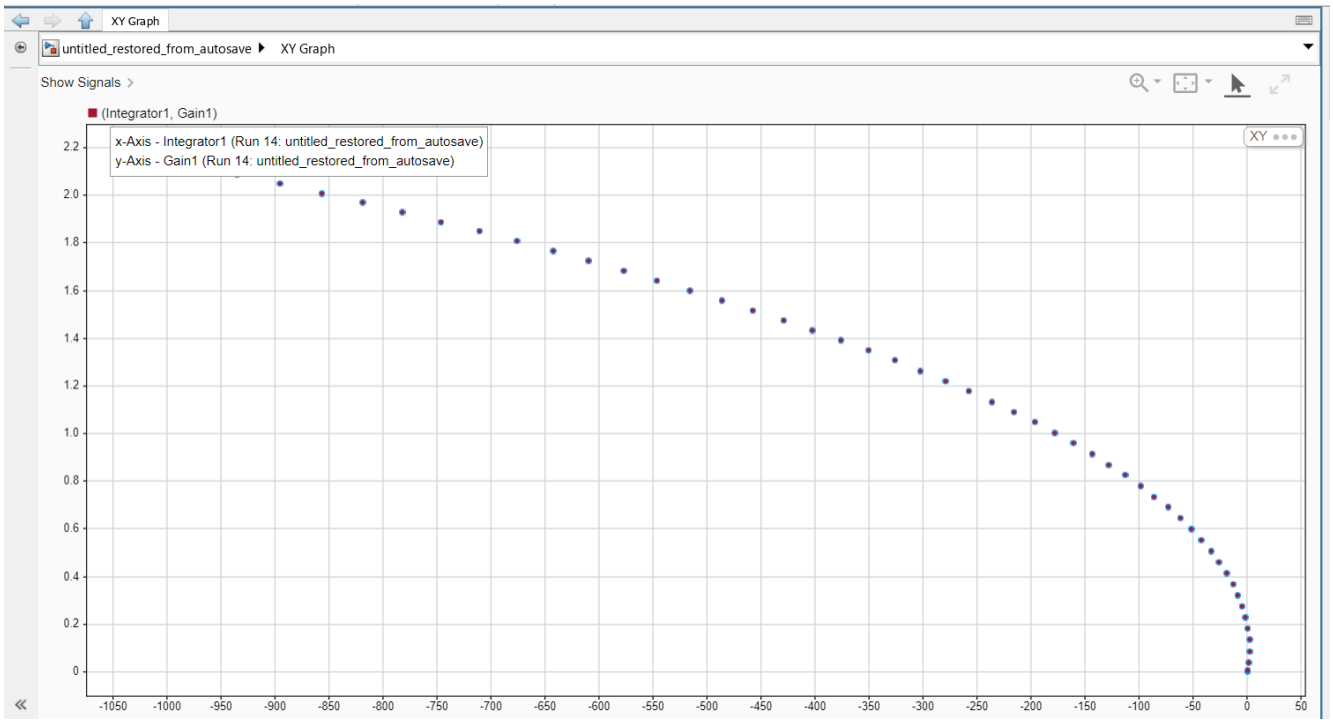

Discussion :

The simulation was carried out to study the dynamic behavior of a DC motor used for drone propulsion. By applying a constant input voltage and varying the load torque, the motor performance was analyzed in terms of speed and torque characteristics.

The results obtained from the simulation show that the motor speed initially increases when voltage is applied and then reaches a steady state after a short period of time. This behavior represents the normal starting response of a DC motor. During the starting stage, the motor draws higher current to overcome inertia and begin rotation.

When different load torques are applied to the motor shaft, noticeable changes in motor speed are observed. As the load torque increases, the speed of the motor decreases. This happens because the motor needs to produce more torque to overcome the additional load. As a result, the motor current increases and the rotational speed slightly reduces until a new steady operating condition is reached.

This behavior demonstrates the typical speed–torque characteristic of DC motors, where speed is inversely related to load torque. Such analysis is very important in drone propulsion systems because the propeller load may change during flight due to air resistance, payload variation, or environmental conditions.

The simulation model helps in understanding how the motor reacts to these changes without performing physical experiments. By observing the speed response under

different load conditions, engineers can determine whether the selected motor is suitable for drone operation and ensure stable and efficient performance.

CONCLUSION:

In this project, a DC motor model was developed and simulated using MATLAB/Simulink to study its dynamic behavior. The motor was modeled by considering both the electrical and mechanical equations. The electrical part represents the armature circuit, while the mechanical part represents the rotor dynamics.

By applying a step voltage input to the motor, the responses of current, speed, and torque were observed using scope blocks and an XY graph. The simulation results showed that the motor current increases initially and then stabilizes as the motor reaches steady state. Similarly, the motor speed increases gradually with time until it reaches a constant value.

The torque–speed characteristic obtained from the XY graph illustrates the relationship between torque and speed, where torque decreases as speed increases. This behavior matches the theoretical characteristics of a DC motor.

Thus, the MATLAB/Simulink model successfully demonstrates the performance and dynamic characteristics of a DC motor. The simulation results help in understanding the motor response under different operating conditions and provide a useful tool for analysis and design of motor control systems.