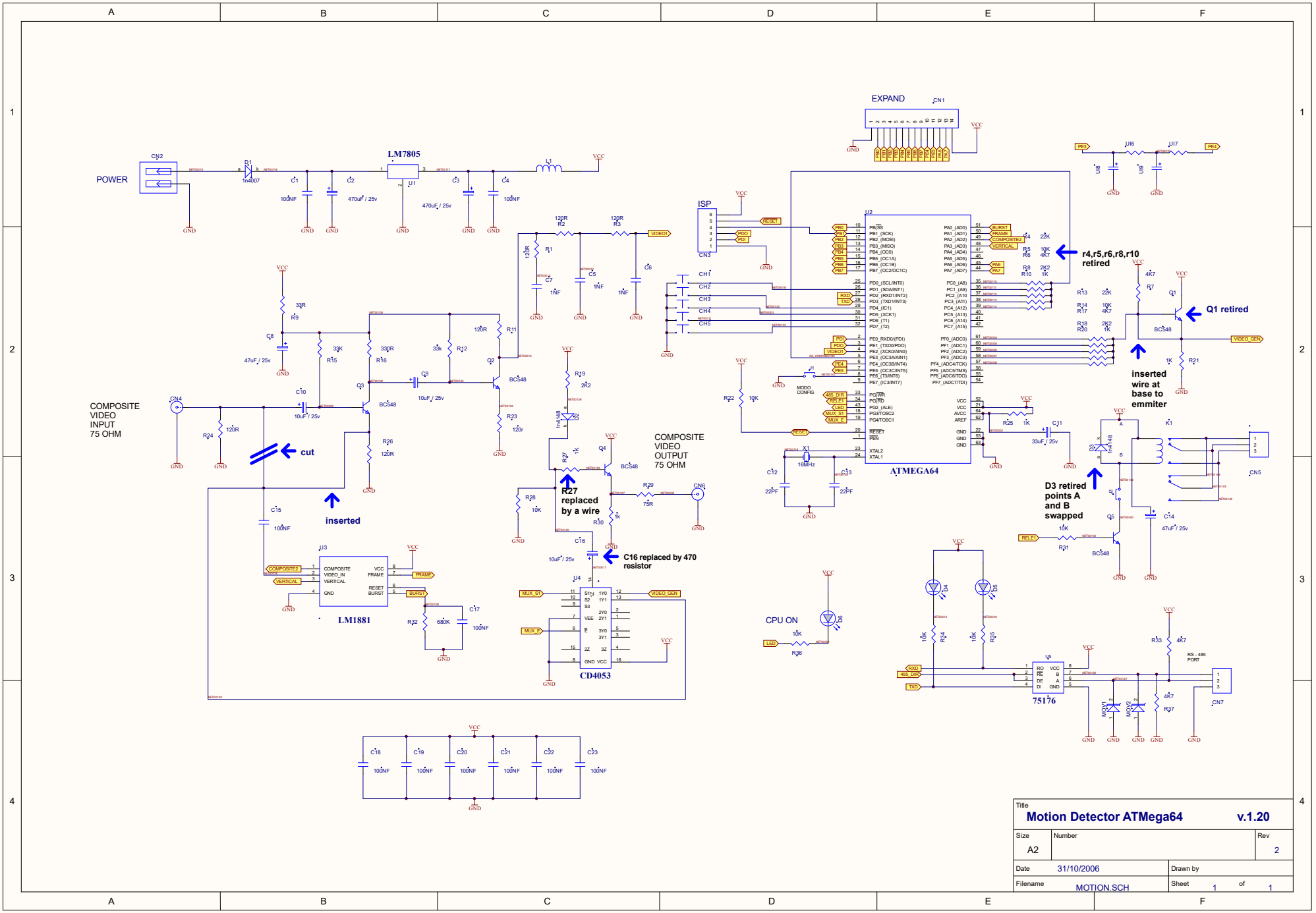

Title	**Motion Detector ATMega64**	**v.1.20**
Size A2	Number	Rev 2
Date 31/10/2006	Drawn by	
Filename MOTION.SCH	Sheet 1 of 1	