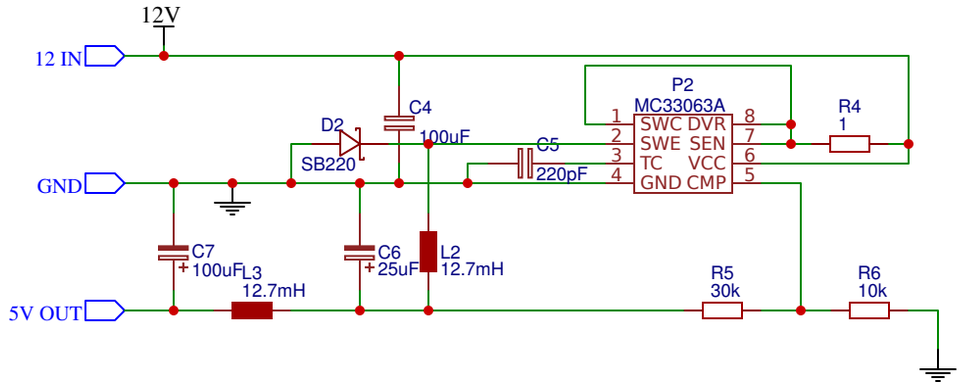

TITLE: 12V to 5V PowerStage	REV: 1.0
Date: 2018-07-28	Sheet: 1/1
EasyEDA V5.6.15	Drawn By: darthcoder1

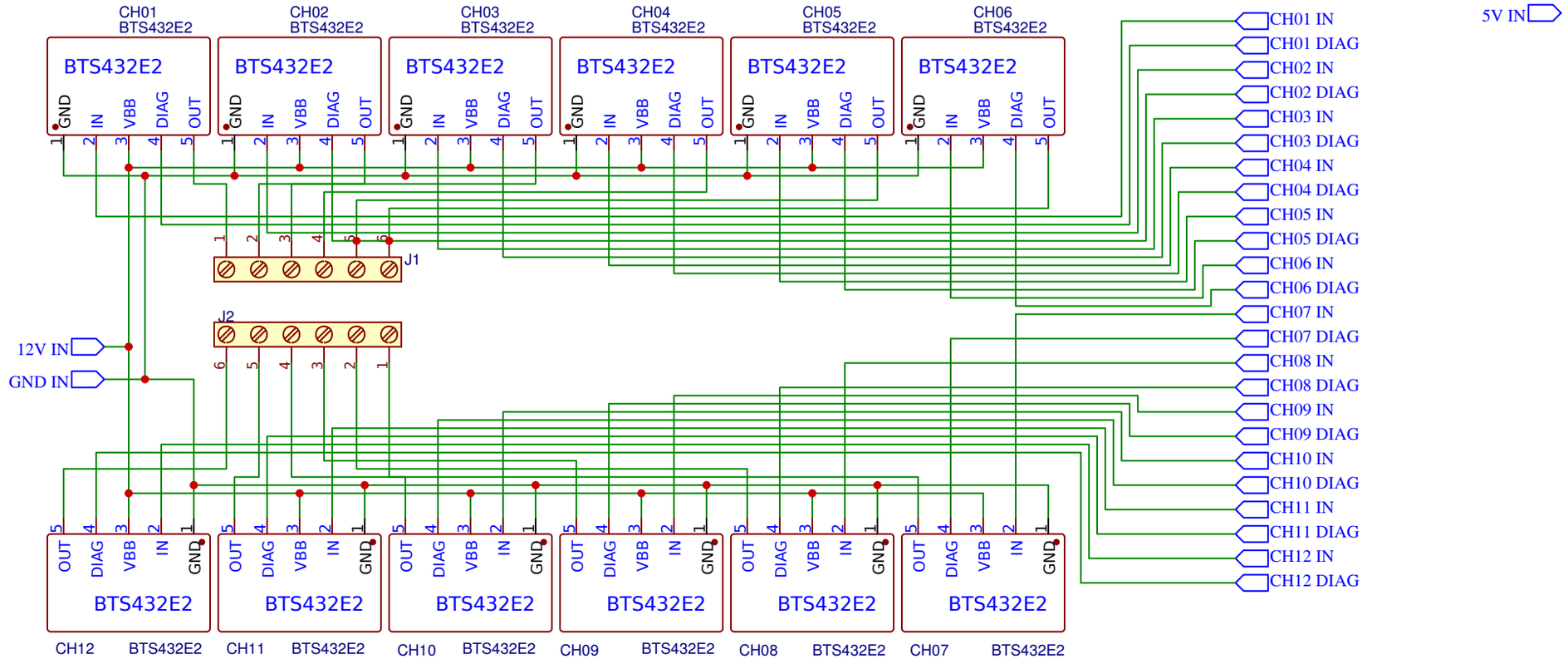

TITLE: Ouput stage		REV: 1.0
Date: 2018-07-28	Sheet: 1/1	
EasyEDA V5.6.15	Drawn By: darthcoder1	