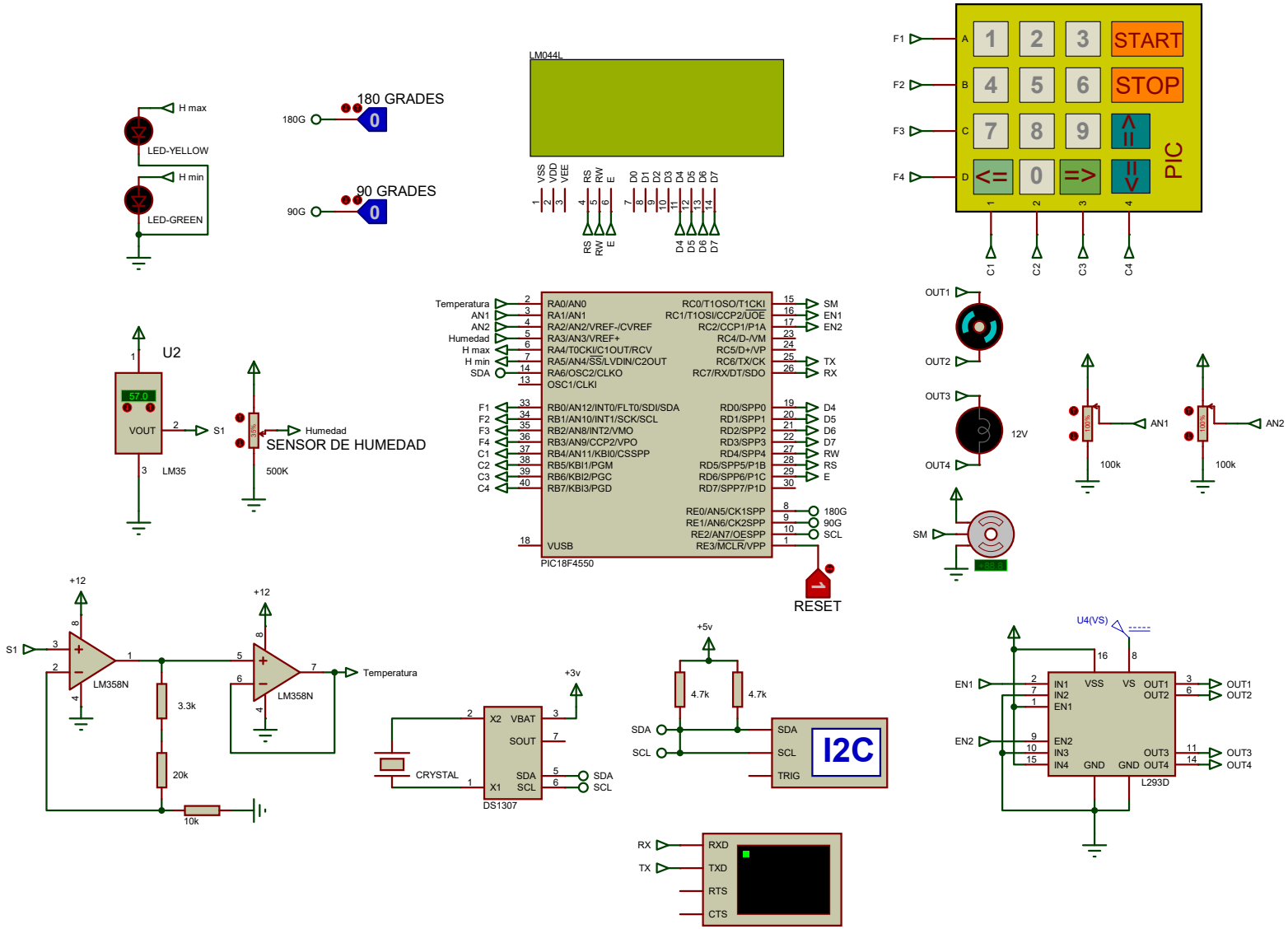
H max
LED-YELLOW
H min
LED-GREEN
180 GRADES
180G
90 GRADES
90G
LM044L
VSS VDD VEE RS RW E D0 D1 D2 D3 D4 D5 D6 D7
F1 F2 F3 F4
A B C D
1 2 3 START
4 5 6 STOP
7 8 9
<= 0 =>
PIC
C1 C2 C3 C4
U2
57.0
VOUT
LM35
S1
Humedad
SENSOR DE HUMEDAD
500K
Temperatura
AN1
AN2
Humedad
H max
H min
SDA
RA0/AN0
RA1/AN1
RA2/AN2/VREF-/CVREF
RA3/AN3/VREF+
RA4/T0CKI/C1OUT/RCV
RA5/AN4/SS/LVDIN/C2OUT
RA6/OSC2/CLKO
OSC1/CLKI
RC0/T1OSO/T1CKI
RC1/T1OSI/CCP2/UOE
RC2/CCP1/P1A
RC4/D-/VM
RC5/D+/VP
RC6/TX/CK
RC7/RX/DT/SDO
SM
EN1
EN2
TX
RX
F1
F2
F3
F4
C1
C2
C3
C4
RB0/AN12/INT0/FLT0/SDI/SDA
RB1/AN10/INT1/SCK/SCL
RB2/AN8/INT2/VMO
RB3/AN9/CCP2/VPO
RB4/AN11/KBI0/CSSPP
RB5/KBI1/PGM
RB6/KBI2/PGC
RB7/KBI3/PGD
RD0/SPP0
RD1/SPP1
RD2/SPP2
RD3/SPP3
RD4/SPP4
RD5/SPP5/P1B
RD6/SPP6/P1C
RD7/SPP7/P1D
D4
D5
D6
D7
RW
RS
E
RE0/AN5/CK1SPP
RE1/AN6/CK2SPP
RE2/AN7/OESPP
RE3/MCLR/VPP
180G
90G
SCL
VUSB
PIC18F4550
RESET
OUT1
OUT2
OUT3
OUT4
12V
AN1
AN2
100k
100k
SM
+12
S1
LM358N
3.3k
20k
10k
+12
LM358N
Temperatura
+3v
X2
VBAT
SOUT
CRYSTAL
SDA
SCL
X1
DS1307
+5v
4.7k
4.7k
SDA
SCL
SDA
SCL
TRIG
I2C
RX
TX
RXD
TXD
RTS
CTS
U4(VS)
EN1
EN2
IN1
IN2
EN1
EN2
IN3
IN4
VSS
VS
GND
GND
OUT1
OUT2
OUT3
OUT4
L293D
OUT1
OUT2
OUT3
OUT4