Nixie Board

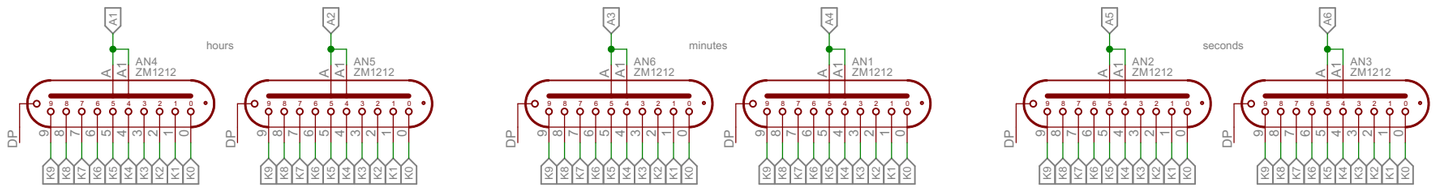

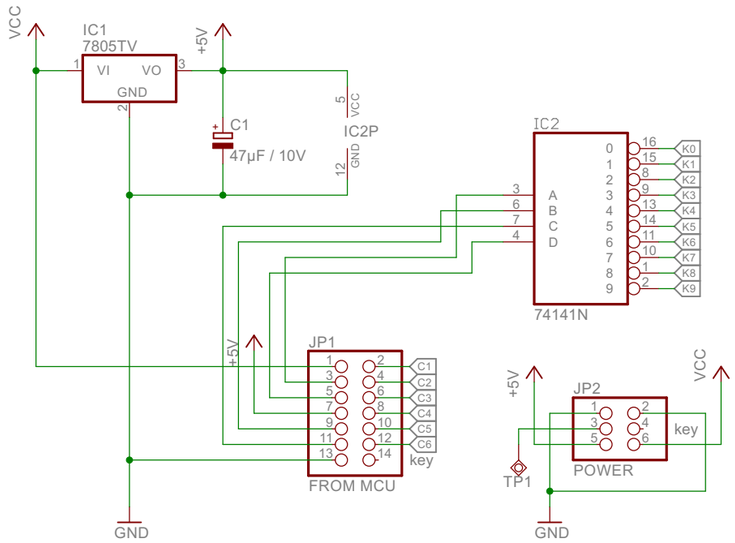

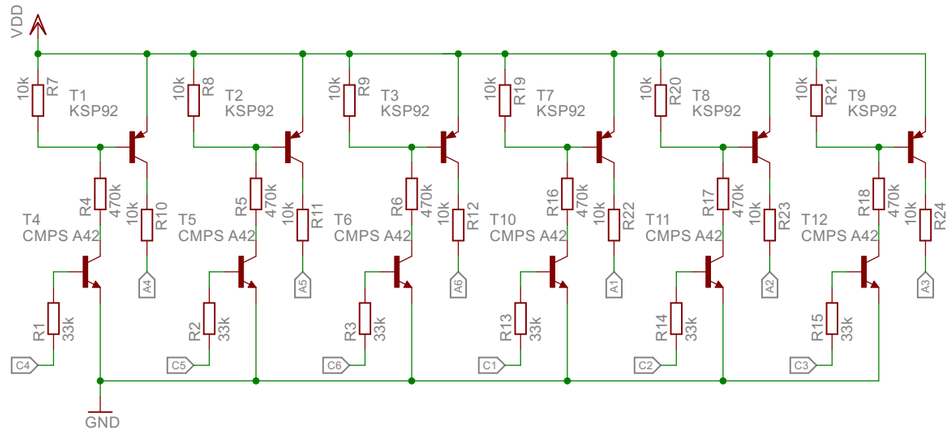

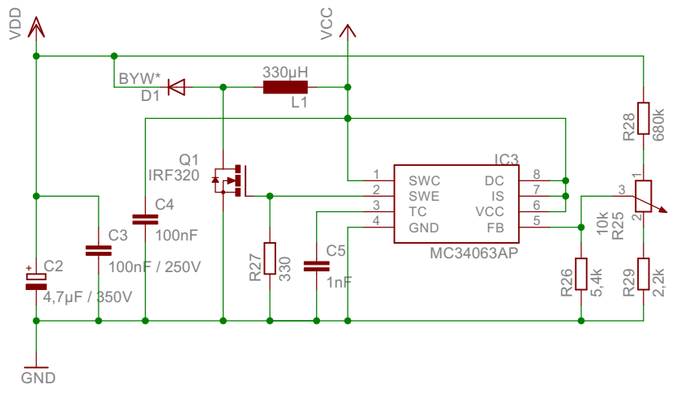

MCU Board

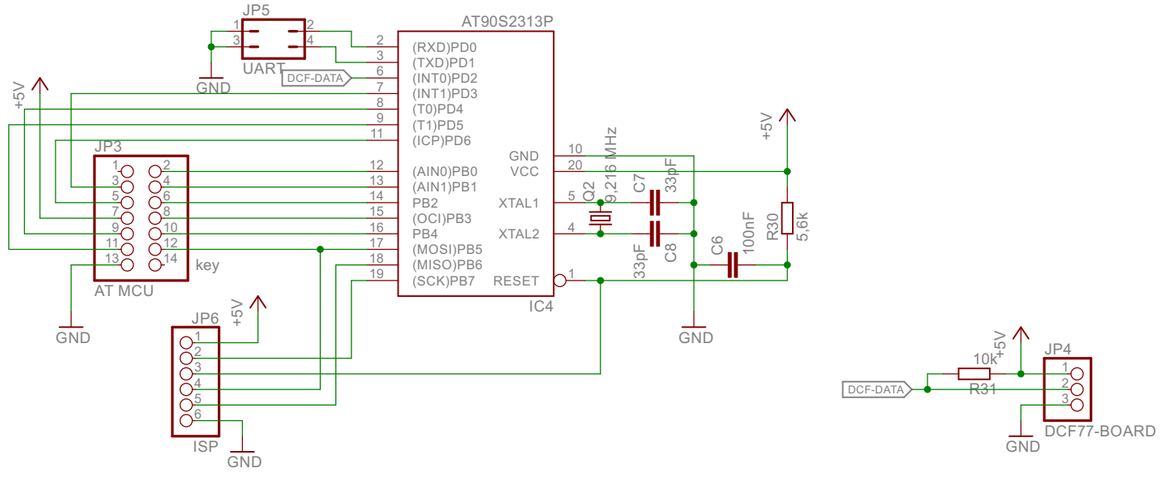

	nixie-uhr
	21.08.15 12:04
	Sheet: 1/1