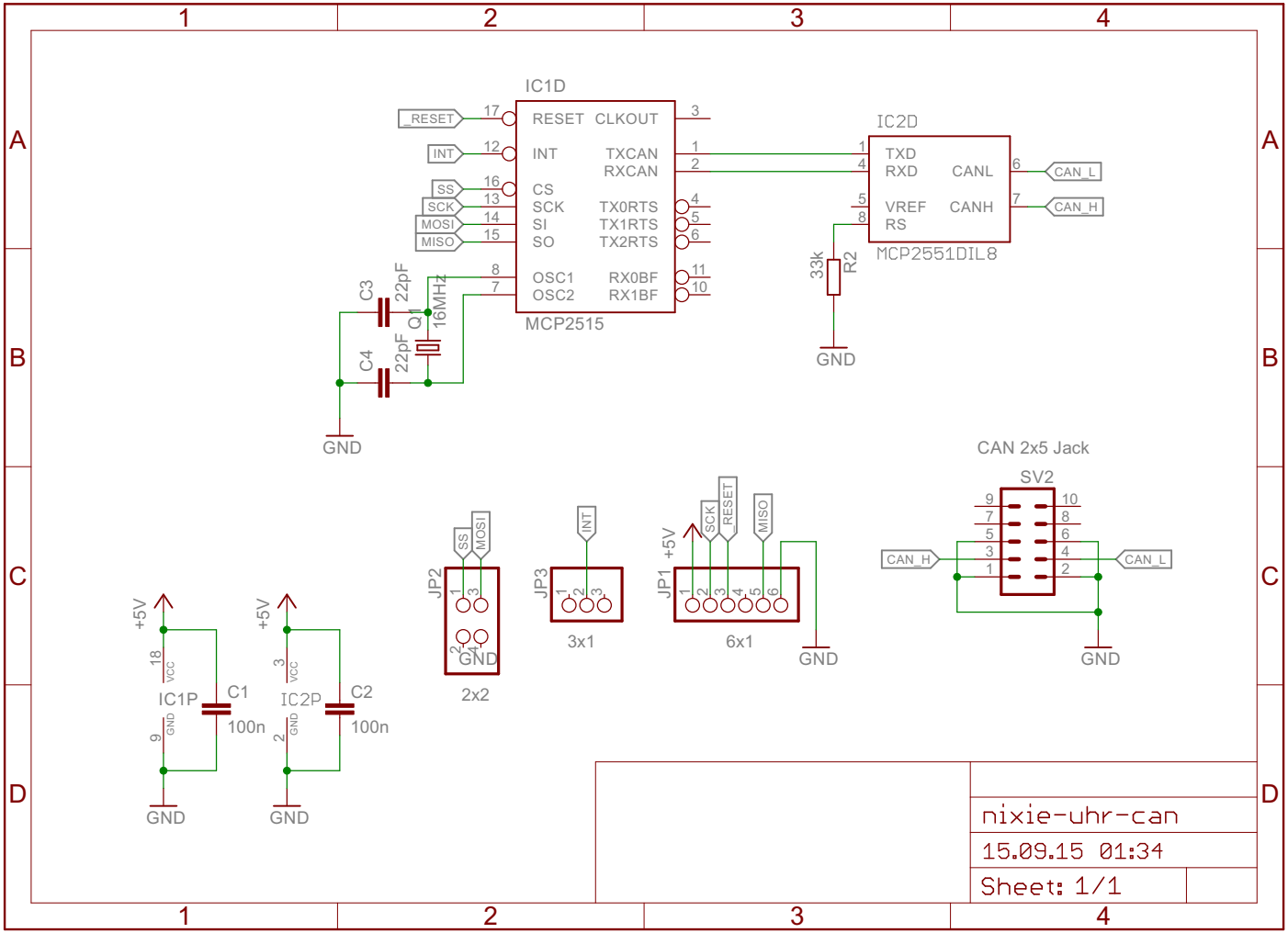
IC1D
MCP2515
RESET
CLKOUT
INT
TXCAN
RXCAN
CS
SCK
SI
SO
TX0RTS
TX1RTS
TX2RTS
OSC1
OSC2
RX0BF
RX1BF
_RESET
INT
SS
SCK
MOSI
MISO
C3
22pF
C4
22pF
Q1
16MHz
GND
IC2D
MCP2551DIL8
TXD
RXD
CANL
VREF
CANH
RS
CAN_L
CAN_H
33k
R2
GND
CAN 2x5 Jack
SV2
CAN_H
CAN_L
GND
JP2
SS
MOSI
GND
2x2
JP3
INT
3x1
JP1
+5V
SCK
_RESET
MISO
6x1
GND
+5V
VCC
IC1P
GND
C1
100n
GND
+5V
VCC
IC2P
GND
C2
100n
GND
nixie-uhr-can
15.09.15 01:34
Sheet: 1/1