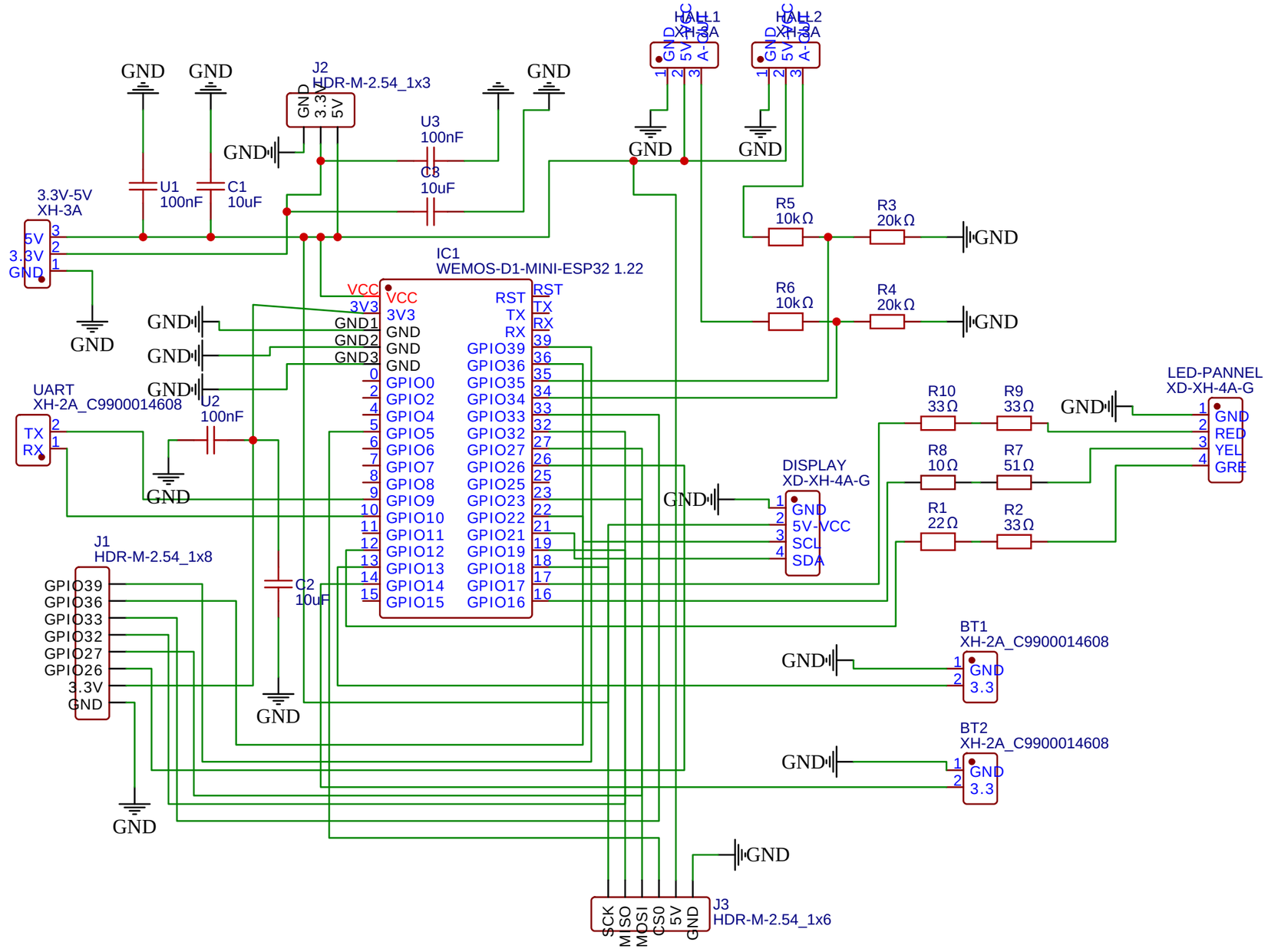

TITLE: ESP32		REV: 1.0
EasyEDA	Company: Your Company	Sheet: 1/1
	Date: 2023-12-07 Drawn By: daslicht	