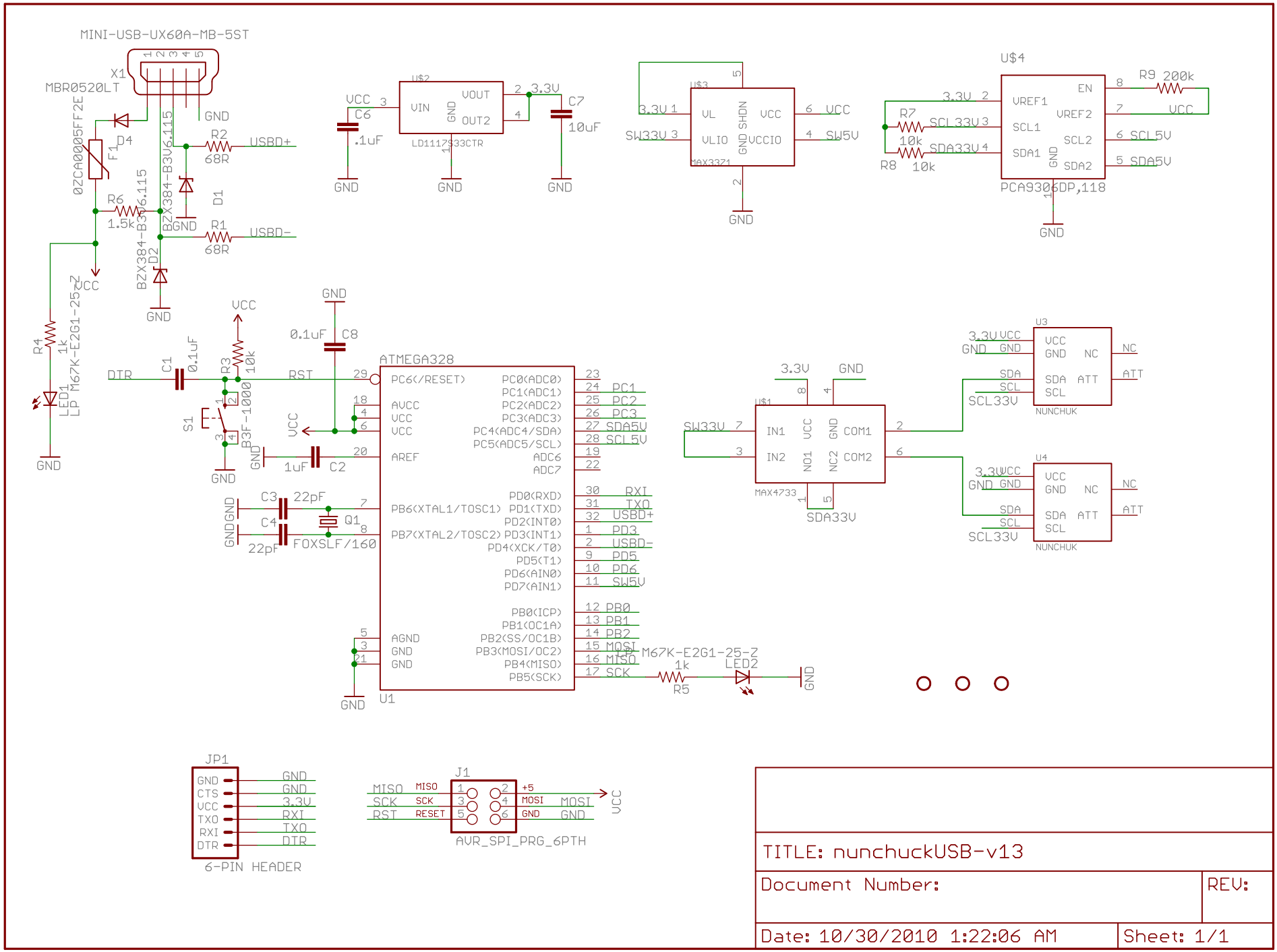

TITLE: nunchuckUSB-v13

Document Number:

REV:

Date: 10/30/2010 1:22:06 AM

Sheet: 1/1