Practice Set - Mathematical Physics

JEST Previous Year Question

(2012 To 2020)

S.NO	Topic	Number of Question
1.	Vector Analysis	7
2.	Ordinary Differential Equations	5
3.	Linear Algebra Matrices	9
4.	Fourier Series	1
5.	Complex Numbers and Analysis	9
6.	Laplace Transforms	2
7.	Fourier Transforms	2
8.	Dirac Delta Function	5
9.	Infinite Series	5
10.	Numerical Technique	1
11.	Probability Distribution	9
12.	Maxima and Minima	2
13.	Special Function	3
14.	Group Theory	2
15.	Dimensional Analysis	2
16.	Other	2
Total Number of Question		66

1. Vector Analysis

Q1. The vector field $xz\hat{i} + y\hat{j}$ in cylindrical polar coordinates is

(a) $\rho\left(z\cos^2\phi + \sin^2\phi\right)\hat{e}_\rho + \rho\sin\phi\cos\phi(1-z)\hat{e}_\phi$

(b) $\rho\left(z\cos^2\phi + \sin^2\phi\right)\hat{e}_\rho + \rho\sin\phi\cos\phi(1+z)\hat{e}_\phi$

(c) $\rho\left(z\sin^2\phi + \cos^2\phi\right)\hat{e}_\rho + \rho\sin\phi\cos\phi(1+z)\hat{e}_\phi$

(d) $\rho\left(z\sin^2\phi + \cos^2\phi\right)\hat{e}_\rho + \rho\sin\phi\cos\phi(1-z)\hat{e}_\phi$

JEST-2013

Q2. Given the condition $\nabla^2\phi = 0$, the solution of the equation $\nabla^2\psi = k\vec{\nabla}\phi.\vec{\nabla}\phi$ is given by

(a) $\psi = \dfrac{k\phi^2}{2}$ (b) $\psi = k\phi^2$ (c) $\psi = \dfrac{k\phi\ln\phi}{2}$ (d) $\psi = \dfrac{k\phi\ln\phi}{2}$

JEST-2016

Q3. What is the equation of the plane which is tangent to the surface $xyz = 4$ at the point $(1,2,2)$?

(a) $x + 2y + 4z = 12$ (b) $4x + 2y + z = 12$

(c) $x + 4y + z = 0$ (d) $2x + y + z = 6$

JEST-2017

Q4. Suppose $\psi\vec{A}$ is a conservative vector, $\vec{A}$ is a non-conservative vector and ψ is non-zero scalar everywhere. Which one of the following is true?

(a) $\left(\nabla\times\vec{A}\right)\cdot\vec{A} = 0$ (b) $\vec{A}\times\nabla\psi = \vec{0}$

(c) $\vec{A}\cdot\nabla\psi = 0$ (d) $\left(\nabla\times\vec{A}\right)\times\vec{A} = \vec{0}$

JEST-2019

Q5. Which one of the following vectors lie along the line of intersection of the two planes $x + 3y - z = 5$ and $2x - 2y + 4z = 3$?

(a) $10\hat{i} - 2\hat{j} + 5\hat{k}$ (b) $10\hat{i} - 6\hat{j} - 8\hat{k}$

(c) $10\hat{i} + 2\hat{j} + 5\hat{k}$ (d) $10\hat{i} - 2\hat{j} - 5\hat{k}$

JEST-2019

Q6. What is the angle (in degrees) between the surfaces $y^2 + z^2 = 2$ and $y^2 - x^2 = 0$ at the point $(1, -1, 1)$

JEST-2019

Q7. Let $\vec{r}$ be the position vector of a point on a closed contour C. What is the value of the line integral $\oint \vec{r} \cdot d\vec{r}$?

(a) 0 (b) $\frac{1}{2}$ (c) 1 (d) π

JEST-2019

---

1. Vector Analysis (Solution)

Ans. 1: (a)

Solution: $\vec{A} = xz\hat{i} + y\hat{j} \Rightarrow A_x = xz, \quad A_y = y, \quad A_z = 0$

$$A_\rho = \vec{A}\cdot\hat{e}_\rho = A_x\left(\hat{x}\cdot\hat{e}_\rho\right) + A_y\left(\hat{y}\cdot\hat{e}_\rho\right) + A_z\left(\hat{z}\cdot\hat{e}_\rho\right)$$

$$\Rightarrow A_\rho = \rho\cos\phi z\left(\cos\phi\right) + \rho\sin\phi\left(\sin\phi\right) + 0 \Rightarrow A_\rho = \left(\rho\cos\phi^2 z + \rho\sin^2\phi\right)\hat{e}_\rho$$

$$A_\phi = \vec{A}\cdot\hat{e}_\phi = A_x\left(\hat{x}\cdot\hat{e}_\phi\right) + A_y\left(\hat{y}\cdot\hat{e}_\phi\right) + A_z\left(\hat{z}\cdot\hat{e}_\phi\right)$$

$$\Rightarrow A_\phi = \rho\cos\phi\left(-\sin\phi\right)z + \rho\sin\phi\cdot\cos\phi \Rightarrow A_\phi = \rho\cos\phi\cdot\sin\phi\left(1-z\right)\hat{e}_\phi$$

$$\vec{A} = A_\rho\hat{e}_\rho + A_\phi\hat{e}_\phi + A_z\hat{e}_z = \rho\left(z\cos^2\phi + \sin^2\phi\right)\hat{e}_\rho + \rho\cos\phi\sin\phi\left(1-z\right)\hat{e}_\phi$$

Ans. 2: (a)

Solution: $\nabla^2\phi = 0 \Rightarrow \vec{\nabla}.\left(\vec{\nabla}\phi\right) = 0 \Rightarrow \vec{\nabla}.\left(\vec{\nabla}\phi\right) = 0 \Rightarrow \vec{\nabla}\phi = \alpha\hat{x} + \beta\hat{y} + \gamma\hat{z} \Rightarrow \phi = \alpha x + \beta y + \gamma z$

$$k\vec{\nabla}\phi.\vec{\nabla}\phi = k\left(\alpha^2 + \beta^2 + \gamma^2\right)$$

If $\psi = \dfrac{k\phi^2}{2} = \dfrac{k}{2}\left(\alpha x + \beta y + \gamma z\right)^2$

$$\Rightarrow \nabla^2\psi = \frac{\partial^2\psi}{\partial x^2} + \frac{\partial^2\psi}{\partial y^2} + \frac{\partial^2\psi}{\partial z^2} = k\left(\alpha^2 + \beta^2 + \gamma^2\right) \Rightarrow \nabla^2\psi = k\vec{\nabla}\phi.\vec{\nabla}\phi$$

Ans. 3: (d)

Solution: The surface equation is given by

$$\phi = xyz = 4$$

The normal vector to the surface is

$$\vec{n} = \vec{\nabla}\phi = yz\hat{x} + xz\hat{y} + xy\hat{z}$$

At point $\left(1,2,2\right)$,

$$\vec{n} = \left(4\hat{x} + 2\hat{y} + 2\hat{z}\right),\ \hat{n} = \frac{\vec{n}}{\left|\vec{n}\right|} = \frac{\left(4\hat{x} + 2\hat{y} + 2\hat{z}\right)}{\sqrt{16+4+4}} = \frac{\left(2\hat{x} + \hat{y} + \hat{z}\right)}{\sqrt{6}}$$

The equation of plane at point $\left(1,2,2\right)$ is

$$\left[\left(x-1\right)\hat{x} + \left(y-2\right)\hat{y} + \left(z-2\right)\hat{z}\right]\hat{n} = 0$$

$$\Rightarrow 2\left(x-1\right) + 1\left(y-2\right) + 1\left(z-2\right) = 0 \Rightarrow 2x + y + z = 6$$

Ans. 4: (a)

Solution: Divergence of a curl is always zero.

Ans. 5: (b)

Solution: Unit vector normal to $x+3y-z=5$ is $\hat{n}_1=\frac{\vec{\nabla}\phi}{\left|\vec{\nabla}\phi\right|}=\frac{\hat{i}+3\hat{j}-\hat{k}}{\sqrt{1+9+1}}=\frac{\hat{i}+3\hat{j}-\hat{k}}{\sqrt{11}}$

Unit vector normal to $2x-2y+4z=3$ is $\hat{n}_2=\frac{\vec{\nabla}\phi}{\left|\vec{\nabla}\phi\right|}=\frac{2\hat{i}-2\hat{j}+4\hat{k}}{\sqrt{4+4+16}}=\frac{2\hat{i}-2\hat{j}+4\hat{k}}{\sqrt{24}}$

Check for option (b) $\hat{n}=10\hat{i}-6\hat{j}-8\hat{k}$

$\hat{n}_1.\hat{n}=\frac{10-18+8}{\sqrt{11}}=0$ and $\hat{n}_2.\hat{n}=\frac{20+12-32}{\sqrt{24}}=0$

Ans. 6: 60

Solution: The equations of two surfaces are

$$f(x,y,z)=2 \text{ and } g(x,y,z)=0$$

where $f(x.y,z)=y^2+z^2$ and $g(x,y,z)=y^2=x^2$

The normal to the first surfaces is

$$\overrightarrow{\nabla f}=\frac{\partial f}{\partial x}\hat{i}+\frac{\partial f}{\partial y}\hat{j}+\frac{\partial f}{\partial z}\hat{k}\Rightarrow\overrightarrow{\nabla f}=2y\hat{j}+2z\hat{k}$$

$$\overrightarrow{\nabla g}=\frac{\partial g}{\partial x}\hat{i}+\frac{\partial g}{\partial y}+\hat{j}+\frac{\partial g}{\partial z}\hat{k}\Rightarrow\overrightarrow{\nabla g}=-2x\hat{i}+2y\hat{j}$$

At point $(1,-1,1)$, $\overrightarrow{\nabla f}=-2\hat{j}+2\hat{k}$ and $\overrightarrow{\nabla g}=-2\hat{i}-\hat{j}$

Hence the angle between the two surfaces is

$$\theta=\cos^{-1}\frac{\overrightarrow{\nabla f}\cdot\overrightarrow{\nabla g}}{\left|\overrightarrow{\nabla f}\right|\left|\overrightarrow{\nabla g}\right|}=\cos^{-1}\frac{\left(-2\hat{j}+2\hat{k}\right)\cdot\left(-2\hat{i}-2\hat{j}\right)}{\sqrt{8}\sqrt{8}}$$

or, $\theta=\cos^{-1}\frac{4}{8}=\cos^{-1/2}=60^0$

Ans. 7: (a)

Solution: $\vec{r}=x\hat{x}+y\hat{y}+z\hat{z}\Rightarrow\vec{\nabla}\times\vec{r}=0\Rightarrow\oint\vec{r}\cdot d\vec{r}=0$

---

2. Ordinary Differential Equations

Q1. What are the solutions of $f''(x) - 2f'(x) + f(x) = 0$?

(a) $c_1 e^x / x$ (b) $c_1 x + c_2 / x$ (c) $c_1 x e^x + c_2$ (d) $c_1 e^x + c_2 x e^x$

JEST-2014

Q2. Consider the differential equation $G'(x) + kG(x) = \delta(x)$; where k is a constant. Which of the following statements is true?

(a) Both $G(x)$ and $G'(x)$ are continuous at $x = 0$.

(b) $G(x)$ is continuous at $x = 0$ but $G'(x)$ is not.

(c) $G(x)$ is discontinuous at $x = 0$.

(d) The continuity properties of $G(x)$ and $G'(x)$ at $x = 0$ depends on the value of k.

JEST-2015

Q3. If $F(x, y) = x^2 + y^2 + xy$, its Legendre transformed function $G(u, v)$, upto a multiplicative constant, is

(a) $u^2 + v^2 + uv$ (b) $u^2 + v^2 - uv$ (c) $u^2 + v^2$ (d) $(u + v)^2$

JEST-2018

Q4. The solution of the differential equation $y'' - 2y' - 3y = e^u$ is given as $C_1 e^{-t} + C_2 e^{2t} + C_3 e^{3t}$. The values of the coefficients C_1, C_2 and C_3 are:

(a) C_1, C_2 and C_3 are arbitrary

(b) C_1, C_3 are arbitrary and $C_2 = \frac{-1}{3}$

(c) C_2, C_3 are arbitrary and $C_1 = \frac{-1}{3}$

(d) C_1, C_2 are arbitrary and $C_3 = \frac{-1}{3}$

JEST-2020

Q5. A particle moving in two dimensions satisfies the equations of motion

$$\dot{x}(t) = x(t) + y(t)$$

$$\dot{y}(t) = x(t) - y(t)$$

with $\dot{x}(0) = 0$. What is the ratio of $\frac{x(\infty)}{y(\infty)}$?

(a) $1 - \frac{1}{\sqrt{2}}$ (b) $1 + \frac{1}{\sqrt{2}}$ (c) $\sqrt{2} - 1$ (d) $\sqrt{2} + 1$

JEST-2020

---

2. Ordinary Differential Equations (Solution)

Ans. 1: (d)

Solution: Auxiliary equation is, $D^2 - 2D + 1 = 0 \Rightarrow (D-1)^2 = 0 \Rightarrow D = +1,\ +1$

$\because$ Roots are equal, then $f(x) = (c_1 + c_2 x)e^x \Rightarrow f(x) = c_1 e^x + c_2 x e^x$

Ans. 2: (c)

Ans. 3: (b)

Solution: $G = F - xu - yv$

$$dG = dF - xdu - udv - ydv - vdy$$

$$F = x^2 + y^2 + xy$$

$$dF = \frac{\partial F}{\partial x}dx + \frac{\partial F}{\partial y}dy$$

$$dF = udx + vdy$$

$$dG = udx + vdy - xdu - udx - ydv - vdy$$

$$dG = -xdu - ydv$$

$$u = \frac{\partial F}{\partial x}, v = \frac{\partial F}{\partial x}$$

$$u = 2x + y, 2u = 4x + 2y$$

$$2v = 4y + 2x, v = 2y + x$$

$$y = +\frac{1}{3}[2v - u]$$

$$2u - v = 3x$$

$$x = \frac{1}{3}[2u - v]$$

$$dG = -\frac{1}{3}[2u - v]du - \frac{1}{3}[2v - u]dx$$

$$dG(u,v) = -\frac{1}{3}(2u - v)du - \frac{1}{3}(2v - u)dv = \frac{\partial G}{\partial u}du + \frac{\partial G}{\partial v}dv$$

$$\frac{\partial G}{\partial u} = -\frac{1}{3}(2u - v),\ \frac{\partial G}{\partial v} = -\frac{1}{3}(2v - u) \qquad \text{(i)}$$

$$G(u,v) = -\frac{1}{3}\left(u^2 - uv\right) + h(v) \qquad \text{(ii)}$$

$$G(u,v) = -\frac{1}{3}(-u) + \frac{dh(v)}{d(v)} = \frac{u}{3} + \frac{dh(v)}{dv}$$

$$\frac{-2v}{3} + \frac{u}{3} = \frac{u}{3} + \frac{dh(v)}{dx}$$

$$h(v) = \frac{-v^2}{3} \qquad \text{(iii)}$$

$$G(u,v) = -\frac{1}{3}\left(u^2 - uv\right) - \frac{v^2}{3} = -\frac{1}{3}\left(u^2 + v^2 - 4v\right)$$

Ans. 4: (b)

Solution: $\frac{1}{D^2 - 2D - 3} e^2 t = \frac{1}{4 - 2\times 2 - 3} e^{2t}$

P.I. $= -\frac{1}{3} e^{2t}$

$$C_2 = -\frac{1}{3}$$

Ans. 5: (d)

Solution: $\ddot{x} = \dot{x} + \dot{y}$

$$\ddot{x} = \dot{x} + x - \left(\dot{x} - x\right)$$

$$\ddot{x} = \dot{x} + x - \dot{x} + x$$

$$\ddot{x} - 2x = 0$$

$$m^2 - 2 = 0$$

$$m = \pm\sqrt{2}$$

$$x = C_1 e^{\sqrt{2}t} + C_2 e^{-\sqrt{2}t}$$

$$\dot{x} = (t) = C_1\sqrt{2}e^{\sqrt{2}t} - C_2\sqrt{2}e^{-\sqrt{2}t}$$

$$\dot{x}(0) = 0$$

$$C_1 - C_2 = 0$$

$$C_2 = C_1$$

$$x = 2C_1 \sinh\sqrt{2}t$$

$$y = \dot{x} - x = \sqrt{2}C_1 \cosh\sqrt{2}t - 2C_1 \sinh\sqrt{2}t$$

$$\frac{x}{y} = \frac{2C_1 \sinh\sqrt{2}t}{= \sqrt{2}C_1 \cosh\sqrt{2}t - 2C_1 \sinh\sqrt{2}t} = \frac{x}{y} = \frac{1}{\sqrt{2}\tanh\sqrt{2}t - 1} = \frac{1}{\sqrt{2}-1} = \sqrt{2}+1, at\, t \to \infty$$

---

3. Linear Algebra Matrices

Q1. Consider two $n \times n$ matrices, A and B such that $A+B$ is invertible. Define two matrices, $C = A(A+B)^{-1}B$ and $D = B(A+B)^{-1}A$. Which of the following relations always hold true?

(a) $C = D$ (b) $C^{-1} = D$ (c) $BCA = ADB$ (d) $C \neq D$

JEST-2019

Q2. Let A be a hermitian matrix, and C and D be the unitary matrices. Which one of the following matrices is unitary?

(a) $C^{-1}AC$ (b) $C^{-1}DC$ (c) $C^{-1}AD$ (d) $A^{-1}CD$

JEST-2019

Q3. Two of the eigenvalues of the matrix

$$A = \begin{pmatrix} a & 3 & 0 \\ 3 & 2 & 0 \\ 0 & 0 & 1 \end{pmatrix}$$

are 1 and -1. What is the third eigenvalue?

(a) 2 (b) 5 (c) -2 (d) -5

JEST-2018

Q4. For an $N \times N$ matrix consisting of all ones,

(a) all eigenvalues $=1$ (b) all eigenvalues $=0$

(c) the eigenvalues are $1, 2, ...N$ (d) one eigenvalue $=N$, the others $=0$

JEST-2012

Q5. Given a matrix $M = \begin{pmatrix} 2 & 1 \\ 1 & 2 \end{pmatrix}$, which of the following represents $\cos\left(\frac{\pi M}{6}\right)$

(a) $\frac{1}{2}\begin{pmatrix} 1 & 2 \\ 2 & 1 \end{pmatrix}$ (b) $\frac{\sqrt{3}}{4}\begin{pmatrix} 1 & -1 \\ -1 & 1 \end{pmatrix}$ (c) $\frac{\sqrt{3}}{4}\begin{pmatrix} 1 & 1 \\ 1 & 1 \end{pmatrix}$ (d) $\frac{1}{2}\begin{pmatrix} 1 & \sqrt{3} \\ \sqrt{3} & 1 \end{pmatrix}$

JEST-2016

Q6. Let $\Lambda = \begin{pmatrix} 1 & 0 \\ 0 & 11 \end{pmatrix}$ and $M = \begin{pmatrix} 10 & 3i \\ -3i & 2 \end{pmatrix}$. Similarity, transformation of M to Λ can be performed by

(a) $\frac{1}{\sqrt{10}}\begin{pmatrix} 1 & 3i \\ 3i & 1 \end{pmatrix}$ (b) $\frac{1}{\sqrt{9}}\begin{pmatrix} 1 & -3i \\ 3i & 11 \end{pmatrix}$

(c) $\frac{1}{\sqrt{10}}\begin{pmatrix} 1 & 3i \\ -3i & 11 \end{pmatrix}$ (d) $\frac{1}{\sqrt{9}}\begin{pmatrix} 1 & 3i \\ -3i & 1 \end{pmatrix}$

JEST-2017

Q7. If $\rho = \frac{\left[I + \frac{1}{\sqrt{3}}\left(\sigma_x + \sigma_y + \sigma_z\right)\right]}{2}$, where σ's are the Pauli matrices and I is the identity matrix, then the trace of ρ^{2017} is

(a) 2^{2017} (b) 2^{-2017} (c) 1 (d) $\frac{1}{2}$

JEST-2017

Q8. Consider a 2×2 matrix $A = \begin{pmatrix} 1 & 13 \\ 0 & 1 \end{pmatrix}$ what is A^{27}?

(a) $\begin{pmatrix} 1 & 13 \\ 0 & 1 \end{pmatrix}$ (b) $\begin{pmatrix} 1 & 13^{27} \\ 0 & 1 \end{pmatrix}$ (c) $\begin{pmatrix} 1 & 27 \\ 0 & 1 \end{pmatrix}$ (d) $\begin{pmatrix} 1 & 351 \\ 0 & 1 \end{pmatrix}$

JEST-2019

Q9. An $n\times n$ Hermitian matrix A is not a multiple of the identity matrix. Which one of the following statements is always true?

(a) $nTr\left(A^2\right) = \left(TrA\right)^2$ (b) $nTr\left(A^2\right) < \left(TrA\right)^2$

(c) $nTr\left(A^2\right) > \left(TrA\right)^2$ (d) $Tr\left(A^2\right) = n\left(TrA\right)^2$

JEST-2020

---

3. Linear Algebra Matrices (Solution)

Ans. 1: (a)

Solution: $C^{-1} = \left[A(A+B)^{-1}B\right]^{-1} = B^{-1}(A+B)A^{-1}$

$$= B^{-1}AA^{-1} + B^{-1}BA^{-1} = B^{-1} + A^{-1}$$

$$\Rightarrow C^{-1} = B^{-1} + A^{-1}$$

$$D^{-1} = \left[B(A+B)^{-1}A\right]^{-1} = A^{-1}(A+B)B^{-1}$$

$$= A^{-1}AB^{-1} + A^{-1}B^{-1} = B^{-1} + A^{-1}$$

or $D^{-1} = B^{-1} + A^{-1}$

From equation (i) and (ii)

$$C^{-1} = D^{-1}$$

or $CC^{-1}D = CD^{-1}D$ or $D = C$

Therefore, option (a) is correct.

Ans. 2: (b)

Solution: $\left(C^{-1}DC\right)\left(C^{-1}DC\right)^{\dagger} = C^{-1}DCC^{\dagger}D^{\dagger}\left(C^{-1}\right)^{\dagger}$

Since C is unitary $CC^{-1} = I$, therefore $\left(C^{-1}DC\right)\left(C^{-1}DC\right)^{\dagger} = C^{-1}DD^{\dagger}\left(C^{-1}\right)^{\dagger}$

Since D is unitary $DD^{\dagger} = I$, therefore, $\left(C^{-1}DC\right)\left(C^{-1}DC\right)^{\dagger} = C^{-1}\left(C^{-1}\right)^{\dagger}$

Since for any invertible matrix $\left(C^{-1}\right)^{\dagger} = \left(C^{+}\right)^{-1}$ we have

$$\left(C^{-1}DC\right)\left(C^{-1}DC\right)^{\dagger} = C^{-1}\left(C^{\dagger}\right)^{-1}$$

Since C is unitary $C^{\dagger} = C^{-1}$, therefore,

$$\left(C^{-1}DC\right)\left(C^{-1}DC\right)^{\dagger} = C^{-1}\left(C^{-1}\right)^{-1} = C^{-1}C = I$$

Therefore, $C^{-1}DC$ is a unitary matrix.

Ans. 3: (b)

Solution: The sum of eigenvalues $=$ Trace

Therefore $\lambda_1 + \lambda_2 + \lambda_3 = a + 2 + 1 = a + 3$

$$\Rightarrow 1 - 1 + \lambda_3 = a + 3$$

$\Rightarrow \lambda_3 = a+3$ (i)

The product of eignevalues $=$ Determinant

$\Rightarrow \lambda_1 \cdot \lambda_2 \lambda_3 = 2a-9 \Rightarrow (1)(-1)\lambda_3 = 2a-9$

$\Rightarrow \lambda_3 = 9-2a$ (ii)

Eliminating a from equation (i) and putting it in (ii) gives

$$\lambda_3 = 9-2(\lambda_3-3) \Rightarrow \lambda_3 = 9-2\lambda_3+6$$

$$\Rightarrow 3\lambda_3 = 15 \Rightarrow \lambda = 5$$

Ans. 4: (d)

Solution: $\begin{bmatrix} 1 & 1 \\ 1 & 1 \end{bmatrix} = 0,\ 2$

$$\begin{bmatrix} 1 & 1 & 1 \\ 1 & 1 & 1 \\ 1 & 1 & 1 \end{bmatrix} = 0, 0, 3$$

So, far $N \times N$ matrix one eigen value is N and all other eigen values are zero.

Ans. 5: (b)

Solution: Given, $M = \begin{bmatrix} 2 & 1 \\ 1 & 2 \end{bmatrix}$

For eigen value, $\begin{vmatrix} 2-\lambda & 1 \\ 1 & 2-\lambda \end{vmatrix} = 0 \Rightarrow \lambda = 1, 3$

Now, for $\lambda = 1$,

$$\begin{bmatrix} 2 & 1 \\ 1 & 2 \end{bmatrix} \begin{bmatrix} x_1 \\ x_2 \end{bmatrix} = 1 \begin{bmatrix} x_1 \\ x_2 \end{bmatrix}$$

$\Rightarrow 2x_1 + x_2 = x_1 \Rightarrow x_1 = -x_2$

Therefore, eigen vector associated with eigen value,

$$\lambda = 1 \text{ is } \phi_1 = \frac{1}{\sqrt{2}} \begin{pmatrix} 1 \\ -1 \end{pmatrix}$$

Similarly, for $\lambda = 3$, we get associated eigen vector as,

$$\phi_2 = \frac{1}{\sqrt{2}}\begin{pmatrix}1\\1\end{pmatrix}$$

Thus, $M = \frac{1}{2}\begin{bmatrix}1 & 1\\-1 & 1\end{bmatrix}\begin{bmatrix}1 & 0\\0 & 3\end{bmatrix}\begin{bmatrix}1 & -1\\1 & 1\end{bmatrix}$

$$\cos\frac{\pi}{6}M = \frac{1}{2}\begin{bmatrix}1 & 1\\-1 & 1\end{bmatrix}\begin{bmatrix}\cos\frac{\pi}{6} & 0\\0 & \cos\frac{\pi}{2}\end{bmatrix}\begin{bmatrix}1 & -1\\1 & 1\end{bmatrix}$$

$$= \frac{1}{2}\begin{bmatrix}1 & 1\\-1 & 1\end{bmatrix}\begin{bmatrix}\frac{\sqrt{3}}{2} & 0\\0 & 0\end{bmatrix}\begin{bmatrix}1 & -1\\1 & 1\end{bmatrix} = \begin{bmatrix}\frac{\sqrt{3}}{4} & -\frac{\sqrt{3}}{4}\\-\frac{\sqrt{3}}{4} & \frac{\sqrt{3}}{4}\end{bmatrix}$$

Therefore, $\cos\left(\frac{\pi M}{6}\right) = \begin{bmatrix}\frac{\sqrt{3}}{4} & -\frac{\sqrt{3}}{4}\\-\frac{\sqrt{3}}{4} & \frac{\sqrt{3}}{4}\end{bmatrix} = \frac{\sqrt{3}}{4}\begin{bmatrix}1 & -1\\-1 & 1\end{bmatrix}$

Thus, option (b) is correct option.

Ans. 6: (a)

Solution: $M = \begin{pmatrix}10 & 3i\\-3i & 2\end{pmatrix}$

The eigen value of matrix M is $1, 11$ and corresponding eigen vector are:

$|\phi_1\rangle = \frac{1}{\sqrt{10}}\begin{pmatrix}1\\3i\end{pmatrix}$, $|\phi_2\rangle = \frac{1}{\sqrt{10}}\begin{pmatrix}3i\\1\end{pmatrix}$ respectively.

Now, $P = \left(|\phi_1\rangle \ |\phi_2\rangle\right)$

$$P = \frac{1}{\sqrt{10}}\begin{pmatrix}1 & 3i\\3i & 1\end{pmatrix}$$

Ans. 7: (c)

Solution: Given, $\rho = \frac{\left[I + \frac{1}{\sqrt{3}}\left(\sigma_x + \sigma_y + \sigma_z\right)\right]}{2}$

Now, $\rho^2 = \frac{1}{4}\left[I + \frac{1}{\sqrt{3}}\left(\sigma_x + \sigma_y + \sigma_z\right)\right]\left[I + \frac{1}{\sqrt{3}}\left(\sigma_x + \sigma_y + \sigma_z\right)\right]$

$$= \frac{1}{4}\left[I + \frac{2}{\sqrt{3}}\left(\sigma_x + \sigma_y + \sigma_z\right) + \frac{1}{3}\left(\sigma_x + \sigma_y + \sigma_z\right)^2\right]$$

$$= \frac{1}{4}\left[I + \frac{2}{\sqrt{3}}\left(\sigma_x + \sigma_y + \sigma_z\right) + \frac{1}{3}\left(3I\right)\right]$$

$$= \frac{1}{4}\left[2I + \frac{2}{\sqrt{3}}\left(\sigma_x + \sigma_y + \sigma_z\right)\right] = \frac{1}{2}\left[I + \frac{1}{\sqrt{3}}\left(\sigma_x + \sigma_y + \sigma_z\right)\right]$$

$\rho^2 = \rho \Rightarrow \rho^n = \rho.$, where n can be any positive integer

Therefore, $\rho^{2017} = \rho$

$$\rho^{2017} = \begin{bmatrix} \frac{1+1/\sqrt{3}}{2} & \frac{1-i}{2\sqrt{3}} \\ \frac{1+i}{2\sqrt{3}} & \frac{1-1/\sqrt{3}}{2} \end{bmatrix}$$

since, Trace of a matrix is equal to sum of their diagonal element, so

Trace of $\rho^{2017} = \frac{1+\frac{1}{\sqrt{3}}}{2} + \frac{1-\frac{1}{\sqrt{3}}}{2} = 1$

Ans. 8: (d)

Solution: Given $A = \begin{pmatrix} 1 & 13 \\ 0 & 1 \end{pmatrix}$, it can be easily proved (by mathematical induction) that

$$A^n = \begin{pmatrix} 1 & 13n \\ 0 & 1 \end{pmatrix}$$

For $n = 27$, $\quad A^{27} = \begin{pmatrix} 1 & 13.27 \\ 0 & 1 \end{pmatrix} = \begin{pmatrix} 1 & 351 \\ 0 & 1 \end{pmatrix}$

Ans. 9: (c)

Solution: Let $A=\begin{bmatrix}1 & 1 & 1\\ 1 & 1 & 1\\ 1 & 1 & 1\end{bmatrix}$

$$Tr(A)=3$$

$$A^2=\begin{bmatrix}3 & 3 & 3\\ 3 & 3 & 3\\ 3 & 3 & 3\end{bmatrix}_{3\times 3}$$

$$Tr\left(A^2\right)=9\Rightarrow 3\times 9>9=27>9$$

---

4. Fourier Series

Q1. The function $f(x) = \cosh x$ which exists in the range $-\pi \le x \le \pi$ is periodically repeated between $x = (2m-1)\pi$ and $(2m+1)\pi$, where $m = -\infty$ to ∞. Using Fourier series, indicate the correct relation at $x = 0$

(a) $\sum_{n=-\infty}^{\infty} \frac{(-1)^n}{1-n^2} = \frac{1}{2}\left(\frac{\pi}{\cosh \pi} - 1\right)$

(b) $\sum_{n=-\infty}^{\infty} \frac{(-1)^n}{1-n^2} = 2\frac{\pi}{\cosh \pi}$

(c) $\sum_{n=-\infty}^{\infty} \frac{(-1)^{-n}}{1+n^2} = 2\frac{\pi}{\sinh \pi}$

(d) $\sum_{n=1}^{\infty} \frac{(-1)^n}{1+n^2} = \frac{1}{2}\left(\frac{\pi}{\sinh \pi} - 1\right)$

JEST-2017

---

4. Fourier Series (Solution)

Ans. 1: (d)

Solution: $f(x) = \cosh x, \quad -\pi \le x \le \pi$

Here, $a_0 = \frac{1}{2\pi}\int_{-\pi}^{\pi} \cosh x dx = \frac{1}{2\pi}[\sinh x]_{-\pi}^{\pi} = \frac{\sinh \pi}{\pi}$

$b_n = 0$, due to even function

and $a_n = \frac{1}{2\pi}\int_{-\pi}^{\pi}\left(e^x + e^{-x}\right)\cos nx dx \qquad \left[\because \cosh x = \frac{1}{2}\left(e^x + e^{-x}\right)\right]$

$$a_n = \frac{1}{2\pi}\left[\frac{e^x}{\left(1+n^2\right)}\left(\cos nx + n\sin nx\right) + \frac{e^{-x}}{1+n^2}\left(-\cos nx + n\sin nx\right)\right]_{-\pi}^{\pi}$$

$$= \frac{1}{2\pi}\left[\frac{e^{\pi}(-1)^n}{\left(1+n^2\right)} - \frac{e^{-\pi}(-1)^n}{\left(1+n^2\right)} - \frac{e^{-\pi}(-1)^n}{\left(1+n^2\right)} + \frac{e^{\pi}(-1)^n}{\left(1+n^2\right)}\right] = \frac{2(-1)^n \cdot 2\sinh \pi}{2\pi\left(1+n^2\right)} = \frac{2(-1)^n \sinh \pi}{\pi\left(1+n^2\right)}$$

Hence, $f(x) = a_0 + \sum_{n=1}^{\infty}\left(a_n \cos nx + b_n \sin nx\right) \Rightarrow \cosh x = \frac{\sinh \pi}{\pi} + \sum_{n=1}^{\infty}\frac{2(-1)^n \sinh \pi}{\pi\left(1+n^2\right)}\cos nx$

At $x = 0$,

$$\sum_{n=1}^{\infty}\frac{2(-1)^n \sinh \pi}{\pi\left(1+n^2\right)} = \left(1 - \frac{\sinh \pi}{\pi}\right) \Rightarrow \sum_{n=1}^{\infty}\frac{(-1)^n}{\left(1+n^2\right)} = \frac{1}{2}\left[\frac{\pi}{\sinh \pi} - 1\right]$$

---

5. Complex Number and Analysis

Q1. Consider the function $f(x,y)=|x|-i|y|$. In which domain of the complex plane is this function analytic?

(a) First and second quadrants
(b) Second and third quadrants
(c) Second and fourth quadrants
(d) Nowhere

JEST-2019

Q2. Compute $\lim_{z\to 0}\frac{\mathrm{Re}(z^2)+\mathrm{Im}(z^2)}{z^2}$

(a) The limit does not exist
(b) 1
(c) $-i$
(d) -1

JEST-2013

Q3. The value of limit

$$\lim_{z\to i}\frac{z^{10}+1}{z^6+1}$$

is equal to

(a) 1
(b) 0
(c) $\frac{-10}{3}$
(d) $\frac{5}{3}$

JEST-2014

Q4. Given an analytic function $f(z)=\phi(x,y)+i\psi(x,y)$, where $\phi(x,y)=x^2+4x-y^2+2y$. If C is a constant, which of the following relations is true?

(a) $\psi(x,y)=x^2y+4y+C$
(b) $\psi(x,y)=2xy-2x+C$
(c) $\psi(x,y)=2xy+4y-2x+C$
(d) $\psi(x,y)=x^2y-2x+C$

JEST-2015

Q5. The value of the integral $\int_0^\infty \frac{\ln x}{(x^2+1)^2}dx$ is

(a) 0
(b) $\frac{-\pi}{4}$
(c) $\frac{-\pi}{2}$
(d) $\frac{\pi}{2}$

JEST-2012

Q6. The value of integral

$$I = \oint_c \frac{\sin z}{2z - \pi} dz$$

with c a circle $|z| = 2$, is

(a) 0 (b) $2\pi i$ (c) πi (d) $-\pi i$

JEST-2014

Q7. The integral $I = \int_1^\infty \frac{\sqrt{x-1}}{(1+x)^2} dx$ is

(a) $\frac{\pi}{\sqrt{2}}$ (b) $\frac{\pi}{2\sqrt{2}}$ (c) $\frac{\sqrt{\pi}}{2}$ (d) $\sqrt{\frac{\pi}{2}}$

JEST-2017

Q8. The integral

$$\int_{-\infty}^{\infty} \frac{\cos x}{x^2 + 1} dx \text{ is}$$

(a) $\frac{\pi}{e}$ (b) πe^{-2} (c) π (d) zero

JEST-2018

Q9. What is the value of the following contour integral I taken counterclockwise around the circle $|z| = 2$?

$$I = \oint_C \frac{dz}{z^3 (z+4)}$$

(a) $\frac{\pi i}{2}$ (b) $\frac{\pi i}{32}$ (c) $\frac{\pi i}{16}$ (d) $\frac{\pi i}{4}$

JEST-2020

(Solution)

5. Complex Number and Analysis

Ans. 1: (c)

Solution: $f(x,y)=|x|-i|y|$

$$f(x,y)=x-iy=\overline{z}$$

$$f(x,y)=-x-iy=-z$$

$$f(x,y)=-x+iy=-\overline{z}$$

$$f(x,y)=x+iy=z$$

We know $\overline{z}$ is not analytic and z and $-z$ are analytic. So answer is (c).

Ans. 2: (a)

Solution: $\lim\limits_{z\to 0}\dfrac{\mathrm{Re}\left(z^2\right)+\mathrm{Im}\left(z^2\right)}{z^2}=\lim\limits_{z\to 0}\dfrac{x^2-y^2+2xy}{x^2-y^2+2ixy}=\lim\limits_{\substack{y=0\\x\to 0}}\dfrac{x^2-y^2+2xy}{x^2-y^2+2ixy}=1$

$$\lim_{\substack{x=0\\y\to 0}}\frac{x^2-y^2+2xy}{x^2-y^2+2ixy}=1 \quad\text{and}\quad \lim_{\substack{y=x\\x\to 0}}\frac{x^2-y^2+2xy}{x^2-y^2+2ixy}=-i$$

Ans. 3: (d)

Solution: $\lim\limits_{z\to i}\dfrac{z^{10}+1}{z^6+1}=\lim\limits_{z\to i}\dfrac{10z^9}{6z^5}=\lim\limits_{z\to i}\dfrac{10z^4}{6}=\dfrac{10}{6}=\dfrac{5}{3}$

Ans. 4: (c)

Solution: $u=\phi(x,y)=x^2+4x-y^2+2y$, $v=\psi$

From C.R. equation, $\dfrac{\partial u}{\partial x}=\dfrac{\partial v}{\partial y}$, $\Rightarrow \dfrac{\partial \phi}{\partial x}=\dfrac{\partial \psi}{\partial y}, \dfrac{\partial u}{\partial y}=-\dfrac{\partial v}{\partial x}\Rightarrow \dfrac{\partial \phi}{\partial y}=-\dfrac{\partial \psi}{\partial x}$

Now, $\dfrac{\partial \phi}{\partial x}=2x+4=\dfrac{\partial \psi}{\partial y}$

$\Rightarrow \psi=2xy+4y+f(x)$ (i)

and $\dfrac{\partial \phi}{\partial y}=-2y+2\Rightarrow \dfrac{\partial \psi}{\partial x}=+2y-2$

$\psi=2xy+2x+f(y)$ (ii)

From (i) and (ii), $2xy+4y+f(x)=2xy-2x+f(y)$

$f(x) = -2x, \quad f(y) = 4y$

$\psi = 2xy + 4y - 2x + c$

Ans. 5: (b)

Solution: $\int_0^\infty \frac{\ln x}{(x^2+1)^2} dx = \int_0^\infty \frac{\ln z}{(z^2+1)^2} dz$

Let us consider new function $f(z) = \left(\frac{\ln z}{z^2+1}\right)^2$, then $I = \int_0^\infty \left(\frac{\ln z}{z^2+1}\right)^2 dz$

Pole at $z = \pm i$ is simple pole of second order.

Residue at $z = i$ is

$$= \frac{d}{dz}(z-i)^2 \frac{(\ln z)^2}{(z-i)^2(z+i)^2} = \frac{d}{dz}\frac{(\ln z)^2}{(z+i)^2}$$

$$= \frac{(z+i)^2\, 2(\ln z).\frac{1}{z} - (\ln z)^2.2(z+i)}{(z+i)^4} = \frac{(z+i)2\ln(z)\frac{1}{z} - (\ln z)^2.2}{(z+i)^3}$$

$$= \frac{(2i)2\times\frac{1}{i}\ln i - (\ln i)^2\cdot 2}{(2i)^3} = \frac{4\frac{i\pi}{2} - \left(\frac{i\pi}{2}\right)^2 \times 2}{-8i} = \frac{2\pi i + \frac{\pi^2}{2}}{-8i}$$

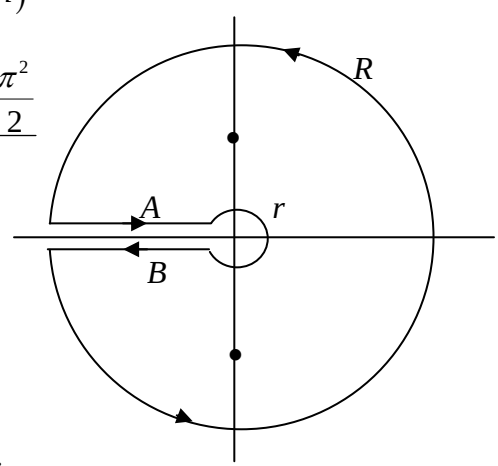

$\Rightarrow \text{Res}\big|_{z=i} = \frac{-\pi}{4} + \frac{\pi^2}{16} i$

Similarly, at $z = -i$; $\text{Res}\big|_{z=-i} = \frac{-\pi}{4} - \frac{\pi^2}{16} i$

$$I = \int_0^\infty \left(\frac{\ln z}{z^2+1}\right)^2 dz = 2\pi i\left(\frac{-\pi}{4} + \frac{\pi^2}{16} i - \frac{\pi}{4} - \frac{\pi^2}{16} i\right) = -\pi^2 i$$

$$-\pi^2 i = \left(\int_R\int_A\int_B\int_r\right) f(z)\,dz = \left(\int_A\int_B\right) f(z)\,dz; \qquad \left[\because \int_A\int_B \text{ vanish}\right]$$

Along path A; $z = -x + i\varepsilon$ and along path B; $z = -x - i\varepsilon$

Thus $-\pi^2 i = \left(\int_A\int_B\right) f(z)\,dz = -\int_{-\infty}^0 \left[\frac{\ln(-x+i\varepsilon)}{(-x+i\varepsilon)^2+1}\right] dx - \int_0^\infty \left[\frac{\ln(-x-i\varepsilon)}{(-x-i\varepsilon)^2+1}\right] dx$

$$\Rightarrow -\pi^2 i = \int_0^\infty \left[\frac{\ln(-x+i\varepsilon)}{(-x+i\varepsilon)^2+1}\right]^2 dx - \int_0^\infty \left[\frac{\ln(-x-i\varepsilon)}{(-x-i\varepsilon)^2+1}\right]^2 dx$$

$$\Rightarrow -\pi^2 i = \int_0^\infty \left[\frac{\ln(x)+i\pi}{1+x^2}\right]^2 dx - \int_0^\infty \left[\frac{\ln(x)-i\pi}{1+x^2}\right]^2 dx; \quad \varepsilon \to 0$$

$$\Rightarrow -\pi^2 i = \int_0^\infty \frac{(\ln(x)+i\pi)^2 - (\ln(x)-i\pi)^2}{(1+x^2)^2} dx = 4\pi i \int_0^\infty \frac{\ln x}{(x^2+1)^2} \Rightarrow \int_0^\infty \frac{\ln x}{(x^2+1)^2} = \frac{-i\pi^2}{4\pi i} = \frac{-\pi}{4}$$

Ans. 6: (c)

Solution: $I = \oint_C \frac{\sin z}{2z-\pi}$, for pole $2z-\pi = 0 \Rightarrow z = \frac{\pi}{2}$

Residue at $z = \frac{\pi}{2}$ $\quad \because |z| = 2$, so pole will lie within the contour

$$I = \oint_C \frac{e^{iz}}{2\left(z-\frac{\pi}{2}\right)} = \sum R \times 2\pi i$$

$$\text{Res}\left|_{z=\frac{\pi}{2}}\right. = \frac{\left(z-\frac{\pi}{2}\right) e^{iz}}{2\left(z-\frac{\pi}{2}\right)} = \frac{e^{i\pi/2}}{2} = \frac{i}{2} \text{ (taking imaginary part); Residue } = \frac{1}{2}$$

Now, $I = \frac{1}{2} \times 2\pi i = \pi i$

Ans. 7: (b)

Solution: $I = \int_1^\infty \frac{\sqrt{x-1}}{(1+x)^2} dx$

Put, $x = (1+z^2)$, $dx = 2zdz$

Hence, $I = \int_0^\infty \frac{2z^2 dz}{(2+z^2)^2}$

Here poles, $(2+z^2) = 0 \Rightarrow (z+i\sqrt{2})(z-i\sqrt{2}) = 0$

Only $\left(z = i\sqrt{2}\right)$ poles is allowed

Then $R\left(i\sqrt{2}\right) = \lim_{z \to i\sqrt{2}} \frac{1}{\sqrt{2-1}} \frac{d}{dz}\left[\frac{2z^2\left(z - i\sqrt{2}\right)^2}{\left(z - i\sqrt{2}\right)^2\left(z + i\sqrt{2}\right)^2}\right]$

$$= \lim_{z \to i\sqrt{2}}\left[\frac{\left(z + i\sqrt{2}\right)^2 \cdot 4z - 2z^2 \cdot 2\left(z + i\sqrt{2}\right)}{\left(z + i\sqrt{2}\right)^4}\right]$$

$$= \frac{\left(2i\sqrt{2}\right)^2 \times 4\left(i\sqrt{2}\right) - 2\left(i\sqrt{2}\right)^2 \cdot 2\left(2i\sqrt{2}\right)}{\left(2i\sqrt{2}\right)^4} = -\frac{32\sqrt{2}\,i + 16\sqrt{2}\,i}{64} = -\frac{16\sqrt{2}\,i}{64} = -\frac{i}{2\sqrt{2}}$$

Hence, $\int_{-\infty}^{\infty} \frac{2z^2}{\left(2+z^2\right)^2} dz = 2\pi i\left(-\frac{i}{2\sqrt{2}}\right) = \frac{\pi}{\sqrt{2}}$

$$\Rightarrow \int_0^{\infty} \frac{2z^2}{\left(2+z^2\right)^2} dz = \frac{\pi}{2\sqrt{2}} \Rightarrow \int_1^{\infty} \frac{\sqrt{x-1}}{\left(1+x\right)^2} dx = \frac{\pi}{2\sqrt{2}}$$

Ans. 8: (a)

Solution: $f\left(z\right) = \frac{e^{iz}}{z^2+1} = \frac{e^{iz}}{\left(z+i\right)\left(z-i\right)}$

$$\int_{-\infty}^{\infty} \frac{\cos x}{x^2+1} dx = \operatorname{Re} 2\pi i \times \frac{e^{i \cdot i}}{zi} = \frac{\pi}{e}$$

Ans. 9: (b)

Solution: $f\left(z\right) = \frac{1}{4z^3}\left[1 + \frac{z}{4}\right]^{-1}$

$$= \frac{1}{4z^3}\left[1 - \frac{z}{4} + \frac{\left(-1\right)\left(-2\right)}{2!}\frac{z^2}{16} + \ldots\right], b_1 = \frac{1}{64}, I = 2\pi i \times \frac{1}{64} = \frac{\pi i}{32}$$

---

6. Laplace Transforms

Q1. The Laplace transformation of $e^{-2t}\sin 4t$ is

(a) $\dfrac{4}{s^2+4s+25}$ (b) $\dfrac{4}{s^2+4s+20}$

(c) $\dfrac{4s}{s^2+4s+20}$ (d) $\dfrac{4s}{2s^2+4s+20}$

JEST-2014

Q2. The Laplace transform of $\dfrac{\left(\sin(at)-at\cos(at)\right)}{\left(2a^3\right)}$ is

(a) $\dfrac{2as}{\left(s^2+a^2\right)^2}$ (b) $\dfrac{s^2-a^2}{\left(s^2+a^2\right)^2}$ (c) $\dfrac{1}{(s+a)^2}$ (d) $\dfrac{1}{\left(s^2+a^2\right)^2}$

JEST-2018

(Solution)

6. Laplace Transforms

Ans. 1: (b)

Solution: $\because L\left[e^{-at}\sin bt\right]=\dfrac{b}{(s+a)^2+b^2}$

$$\Rightarrow L\left[e^{-2t}\sin 4t\right]=\frac{4}{(s+2)^2+4^2}=\frac{4}{s^2+4s+20}$$

Ans. 2: (d)

Solution: $L\left\{\dfrac{\sin at-at\cos at}{2a^3}\right\}=\dfrac{1}{\left(s^2+a^2\right)^2}$

---

7. Fourier Transforms

Q1. The Fourier transform of the function $\frac{1}{x^4+3x^2+2}$ up to proportionality constant is

(a) $\sqrt{2}\exp\left(-k^2\right)-\exp\left(-2k^2\right)$

(b) $\sqrt{2}\exp\left(-|k|\right)-\exp\left(-\sqrt{2}|k|\right)$

(c) $\sqrt{2}\exp\left(-\sqrt{|k|}\right)-\exp\left(-\sqrt{2|k|}\right)$

(d) $\sqrt{2}\exp\left(-\sqrt{2}k^2\right)-\exp\left(-2k^2\right)$

JEST-2017

Q2. If $f(t)$ is a real and even function of t, which one of the following statements is true about its Fourier transform $F(\omega)$ (here * indicates complex conjugation)?

(a) $F^*(\omega)=-F(\omega)$

(b) $F^*(\omega)=F(\omega)$

(c) $F(-\omega)=F(\omega)$

(d) $F(-\omega)=F^*(\omega)$

JEST-2020

---

7. Fourier Transforms (Solution)

Ans. 1: (b)

Solution: $f(x)=\frac{1}{\left(x^4+3x^2+2\right)}=\frac{1}{\left(x^2+1\right)}-\frac{1}{\left[x^2+\left(\sqrt{2}\right)^2\right]}$

Now, Fourier transform of $f(x)$ is,

$$F(p)=A\int_{-\infty}^{\infty} f(x)e^{-1kx}dx$$

$$=A\int_{-\infty}^{\infty}\left[\frac{1}{\left(x^2+1\right)}-\frac{1}{x^2+\left(\sqrt{2}\right)^2}\right]e^{-ikx}dx=A\left[\int_{-\infty}^{\infty}\frac{1}{\left(x^2+1\right)}\times e^{-ikx}dx-\int_{-\infty}^{\infty}\frac{e^{-ikx}}{x^2+\left(\sqrt{2}\right)^2}dx\right]$$

$$\because \int_{-\infty}^{\infty}\frac{1}{\left(x^2+a^2\right)}e^{-ikx}dx=\sqrt{\frac{\pi}{2}}\frac{e^{-a|k|}}{a}$$

$$F(k)=A\left[\sqrt{\frac{\pi}{2}}\frac{e^{-|k|}}{1}-\sqrt{\frac{\pi}{2}}\frac{e^{-\sqrt{2}|k|}}{\sqrt{2}}\right]=\frac{A\sqrt{\pi}}{2}\left[\sqrt{2}\exp\left(-|k|\right)-\exp\left(-\sqrt{2}|k|\right)\right]$$

Ans. 2: (b)

Solution: Let $f(t)=$ Real and Even

$$F(\omega)=\int_{-\infty}^{\infty} f(t)e^{-i\omega t}dt=\int_{-\infty}^{\infty} f(t)(\cos\omega t+i\sin\omega t)dt=\int_{-\infty}^{\infty} f(t)\cos\omega t dt$$

So $F^*(\omega)=F(\omega)$

Ex: $f(t)=\cos\omega_0 t$

---

8. Dirac Delta

Q1. The Dirac delta function $\delta(x)$ satisfies the relation $\int_{-\infty}^{\infty} f(x)\delta(x)dx = f(0)$ for a well behaved function $f(x)$. If x has the dimension of momentum then

(a) $\delta(x)$ has the dimension of momentum

(b) $\delta(x)$ has the dimension of $(\text{momentum})^2$

(c) $\delta(x)$ is dimensionless

(d) $\delta(x)$ has the dimension of $(\text{momentum})^{-1}$

JEST-2014

Q2. $\int_{-\infty}^{+\infty}\left(x^2+1\right)\delta\left(x^2-3x+2\right)dx = ?$

(a) 1 (b) 2 (c) 5 (d) 7

JEST-2017

Q3. $\pi\int_{-\infty}^{\infty}\exp\left(-|x|\right)\delta\left(\sin\left(\pi x\right)\right)dx$, where $\delta(...)$ is Dirac distribution, is

(a) 1 (b) $\frac{e+1}{e-1}$ (c) $\frac{e-1}{e+1}$ (d) $\frac{e}{e+1}$

JEST-2018

Q4. What is the value of the integral $\int_{-\infty}^{+\infty} dx\delta\left(x^2-\pi^2\right)\cos x$?

(a) π (b) $-\frac{1}{2\pi}$ (c) $-\frac{1}{\pi}$ (d) 0

JEST-2019

Q5. What is the value of the following integral?

$$I = \frac{100\sqrt{2}}{\pi}\int_0^{\pi/2} x\delta\left(2\sin x-\sqrt{2}\right)dx$$

JEST-2020

---

8. Dirac Delta (Solution)

Ans. 1: (d)

Solution: $\int_{-\infty}^{\infty} f(x)\delta(x)dx = f(0)$

$$f(x)\,\delta(x)\,dx = f(0) \Rightarrow [f(x)]\delta(x)\cdot P = [f(0)] \Rightarrow \delta(x) = [P^{-1}]$$

Since, $[f(x)] = [f(0)]$

If $F(x) = \alpha x + \beta$ is force $[M\,L\,T^{-2}]$

$F(0) = \beta$ is also $[M\,L\,T^{-2}]$

Ans. 2: (d)

Solution: $\because\ (x^2 - 3x + 2) = (x^2 - x - 2x + 2) = x(x-1) - 2(x-1) = (x-1)(x-2)$

$$\Rightarrow \int_{-\infty}^{\infty} (x^2+1)\delta(x^2 - 3x + 2)dx = \int_{-\infty}^{\infty} (x^2+1)\delta[(x-1)(x-2)]dx$$

$$= \frac{1}{|2-1|}[f(1) + f(2)] = [2+5] = 7$$

Ans. 3: (b)

Solution: We know that $\delta[f(x)] = \sum_i \frac{\delta(x - x_i)}{|f'(x_i)|}$,

where x_i 's are the roots of the equation $f(x) = 0$.

Therefore, $\sin \pi x = 0 \Rightarrow \pi x = n\pi \Rightarrow x_i = n$ where n is an integer

$$f'(x) = \pi \cos \pi x \Rightarrow |f'(x_i)| = |\pi(-1)^n| = \pi$$

Hence, $\pi \int_{-\infty}^{\infty} \exp(-|x|)\delta \sin(\pi x)\,dx$

$$= \int_{-\infty}^{\infty} \exp(-|x|)[\delta(0) + \delta(x-1) + \delta(x-1) + \delta(x+1) + \delta(x-2) + \delta(x+2) + \cdots]$$

$$= e^{-|0|} + e^{-|1|} + e^{-|-1|} + e^{-|2|} + e^{-|-2|} + \cdots = 1 + e^{-1} + e^{-1} + e^{-2} + e^{-2} + \cdots$$

$$= 1 + 2(e^{-1} + e^{-2} + e^{-3} + \cdots)$$

The terms in bracket form geometric series with first term e^{-1} and common ratio e^{-1}.

$$\pi\int_{-\infty}^{\infty}\exp\left(-|-x|\right)\delta\left(\sin\left(\pi x\right)\right)dx = 1+2\cdot\frac{e^{-1}}{1-e^{-1}} = 1+2\cdot\frac{1/e}{1-1/e}$$

$$= 1+2\frac{1/e}{(e-1)/e} = 1+2\cdot\frac{1}{e-1} = \frac{e-1+2}{e-1} = \frac{e+1}{e-1}$$

Ans. 4: (c)

Solution: $\delta\left(x^2-\pi^2\right) = \frac{1}{|\pi-(-\pi)|}\left[\delta(x-\pi)+\delta(x+\pi)\right]$

$$= \frac{1}{2\pi}\left[\delta(x-\pi)+\delta(x+\pi)\right]$$

Therefore, $\int_{-\infty}^{\infty} dx\,\delta\left(x^2-\pi^2\right)\cos x = \frac{1}{2\pi}\int_{-\infty}^{\infty} dx\left[\delta(x-\pi)+\delta(x+\pi)\right]\cos x$

$$= \frac{1}{2\pi}\left[\cos\pi+\cos(-\pi)\right] = \frac{1}{2\pi}(-1-1) = -\frac{1}{\pi}$$

Ans. 5: 0025

Solution: $\int_{0}^{\pi/2} x\delta\left(2\sin x-\sqrt{2}\right)dx$

$$t = 2\sin x-\sqrt{2}$$

$$\frac{t+\sqrt{2}}{2} = \sin x$$

$$\frac{dt}{2} = \cos x dx$$

$$\int_{-\sqrt{2}}^{2-\sqrt{2}} \sin^{-1}\left(\frac{t+\sqrt{2}}{2}\right)\frac{\delta(t)\,dt}{2\cdot\frac{\sqrt{4-\left(t+\sqrt{2}\right)^2}}{2}}$$

$$= \sin^{-1}\frac{1}{\sqrt{2}}\times\frac{1}{\sqrt{2}}\int_{-\sqrt{2}}^{2-\sqrt{2}}\delta(t)\,dt = \frac{\pi}{4\sqrt{2}}$$

$$I = \frac{100\sqrt{2}}{\pi}\cdot\frac{\pi}{4\sqrt{2}} = 25$$

---

9. Infinite Series

Q1. As $x \to 1$, the infinite series $x - \frac{1}{3}x^3 + \frac{1}{5}x^5 - \frac{1}{7}x^7 + ...$

(a) diverges

(b) converges to unity

(c) converges to $\frac{\pi}{4}$

(d) none of the above

JEST-2012

Q2. What is the value of the following series?

$$\left(1+\frac{1}{2!}+\frac{1}{4!}+....\right)^2 - \left(1+\frac{1}{3!}+\frac{1}{5!}+.....\right)^2$$

(a) 0 (b) e (c) e^2 (d) 1

JEST-2012

Q3. What is the value of the following series?

$$\left(1-\frac{1}{2!}+\frac{1}{4!}-....\right)^2 + \left(1-\frac{1}{3!}+\frac{1}{5!}-...\right)^2$$

(a) 0 (b) e (c) e^2 (d) 1

JEST-2013

Q4. The sum $\sum_{m=1}^{99} \frac{1}{\sqrt{m+1}+\sqrt{m}}$ is equal to

(a) 9 (b) $\sqrt{99}-1$ (c) $\frac{1}{\left(\sqrt{99}-1\right)}$ (d) 11

JEST-2015

Q5. The sum of the infinite series $1-\frac{1}{3}+\frac{1}{5}-\frac{1}{7}+...$ is

(a) 2π (b) π (c) $\frac{\pi}{2}$ (d) $\frac{\pi}{4}$

JEST-2016

---

9. Infinite Series (Solution)

Ans. 1: (c)

Solution: $\tan^{-1} x = x - \frac{x^3}{3} + \frac{x^5}{5} - \frac{x^7}{7} + ... \Rightarrow \tan^{-1} 1 = \frac{\pi}{4}$

Ans. 2: (d)

Solution: $e^1 = 1 + 1 + \frac{1^2}{2!} + \frac{1^3}{3!} + -$, $e^{-1} = 1 - 1 + \frac{1^2}{2!} - \frac{1^3}{3!}.....$

$$\cosh 1 = \frac{e^1 + e^{-1}}{2} = 1 + \frac{1}{2!} + \frac{1}{4!} + ...$$

$$\sinh 1 = \frac{\left(e^1 - e^{-1}\right)}{2} = 1 + \frac{1}{3!} + \frac{1}{5!} + ...$$

i.e., $\cosh^2 1 - \sinh^2 1 = 1$

Ans. 3: (d)

Solution: $\cos\theta = 1 - \frac{\theta^2}{2!} + \frac{\theta^4}{4!}.....$, $\sin\theta = \theta - \frac{\theta^3}{3!} + \frac{\theta^5}{5!}.....$

$$\Rightarrow \left(1 - \frac{1}{2!} + \frac{1}{4!}...\right)^2 + \left(1 - \frac{1}{3!} + \frac{1}{5!}\right)^2 = \cos^2 1 + \sin^2 1 = 1 \qquad \left[\because \sin^2\theta + \cos^2\theta = 1\right]$$

Ans. 4: (a)

Solution: $\sum_{m=1}^{99} \frac{1}{\sqrt{m+1} + \sqrt{m}} = \sum_{m=1}^{99} \frac{\sqrt{m+1} - \sqrt{m}}{(m+1) - m} = \sum_{m=1}^{99} \sqrt{m+1} - \sqrt{m}$

$$= \sqrt{2} - \sqrt{1} + \sqrt{3} - \sqrt{2}..... + \sqrt{100} - \sqrt{99} = \sqrt{100} - \sqrt{1} = 10 - 1 = 9$$

Ans. 5: (d)

Solution: The series expansion of $\tan^{-1} x$ in interval $-1 < x \le 1$ is,

$$\tan^{-1} x = x - \frac{1}{3}x^3 + \frac{1}{5}x^5 - \frac{1}{7}x^7 + \cdots$$

Putting $x = 1$, we get,

$$\tan^{-1} 1 = 1 - \frac{1}{3} + \frac{1}{5} - \frac{1}{7} + \cdots \Rightarrow 1 - \frac{1}{3} + \frac{1}{5} - \frac{1}{7} \cdots = \frac{\pi}{4}$$

Thus, option (d) is correct.

---

10. Numerical Technique

Q1. The value of $\int_{0.2}^{2.2} xe^{x}dx$ by using the one-segment trapezoidal rule is closed to

(a) 11.672 (b) 11.807 (c) 20.099 (d) 24.119

JEST-2014

---

10. Numerical Technique (Solution)

Ans. 1: (c)

Solution: $h = 2.2 - 0.2 = 2 \Rightarrow I = \frac{h}{2}\left[y(2.2) + y(0.2)\right] = 20.099$

$\left[\because y = xe^{x}\right]$

---

11. Probability Distribution

Q1. An unbiased die is cast twice. The probability that the positive difference (bigger - smaller) between the two numbers is 2 is

(a) $\frac{1}{9}$ (b) $\frac{2}{9}$ (c) $\frac{1}{6}$ (d) $\frac{1}{3}$

JEST-2012

Q2. A box contains 100 coins out of which 99 are fair coins and 1 is a double-headed coin. Suppose you choose a coin at random and toss it 3 times. It turns out that the results of all 3 tosses are heads. What is the probability that the coin you have drawn is the double-headed one?

(a) 0.99 (b) 0.925 (c) 0.75 (d) 0.01

JEST-2013

Q3. There are on average 20 buses per hour at a point, but at random times. The probability that there are no buses in five minutes is closest to

(a) 0.07 (b) 0.60 (c) 0.36 (d) 0.19

JEST-2013

Q4. Two drunks start out together at the origin, each having equal probability of making a step simultaneously to the left or right along the x axis. The probability that they meet after n steps is

(a) $\frac{1}{4^n}\frac{2n!}{n!^2}$ (b) $\frac{1}{2^n}\frac{2n!}{n!^2}$ (c) $\frac{1}{2^n}2n!$ (d) $\frac{1}{4^n}n!$

JEST-2013

Q5. If the distribution function of x is $f(x) = xe^{-x/\lambda}$ over the interval $0 < x < \infty$, the mean value of x is

(a) λ (b) 2λ (c) $\frac{\lambda}{2}$ (d) 0

JEST-2013

Q6. If two ideal dice are rolled once, what is the probability of getting atleast one '6'?

(a) $\frac{11}{36}$ (b) $\frac{1}{36}$ (c) $\frac{10}{36}$ (d) $\frac{5}{36}$

JEST-2015

Q7. The mean value of random variable x with probability density

$$p(x)=\frac{1}{\sigma\sqrt{2\pi}}.\exp\left[-\frac{\left(x^2+\mu x\right)}{\left(2\sigma^2\right)}\right] \text{ is:}$$

(a) 0 (b) $\frac{\mu}{2}$ (c) $\frac{-\mu}{2}$ (d) σ

JEST-2016

Q8. Suppose that we toss two fair coins hundred times each. The probability that the same number of heads occur for both coins at the end of the experiment is

(a) $\left(\frac{1}{4}\right)^{100}\sum_{n=0}^{100}\binom{100}{n}$ (b) $2\left(\frac{1}{4}\right)^{100}\sum_{n=0}^{100}\binom{100}{n}^2$

(c) $\frac{1}{2}\left(\frac{1}{4}\right)^{100}\sum_{n=0}^{100}\binom{100}{n}^2$ (d) $\left(\frac{1}{4}\right)^{100}\sum_{n=0}^{100}\binom{100}{n}^2$

JEST-2017

Q9. A person plans to go from town A to town B by taking either the route $(R1+R2)$ with probability $\frac{1}{2}$ or the route $(R1+R3)$ with probability $\frac{1}{2}$ (see figure). Further, there is a probability $\frac{1}{3}$ that $R1$ is blocked, a probability $\frac{1}{3}$ that $R2$ is blocked, and a probability $\frac{1}{3}$ that $R3$ is blocked. What is the probability that he/she would reach town B?

(a) $\frac{8}{9}$ (b) $\frac{1}{3}$ (c) $\frac{4}{9}$ (d) $\frac{2}{3}$

JEST-2019

---

11. Probability Distribution (Solution)

Ans. 1: (b)

Solution: $p(2)=\dfrac{n(E)}{n(S)}$

The number of ways to come positive difference

$\left[(3,\ 1),\ (4,\ 2),\ (5,\ 3),(6,\ 4),(1,3)(2,4),(3,5)(4,6)\right]$

$$p(2)=\frac{8}{36}=\frac{2}{9}$$

Ans. 2: (c)

Ans. 3: (d)

Solution: From Poision's distribution function,

$$P(n)=\frac{e^{-\lambda}\lambda^{n}}{\lfloor n}$$

here, $\lambda=20$ buses per hour

$\Rightarrow \lambda=\dfrac{5}{3}$ buses in five minutes

Therefore, the probability that there are no buses in five minutes,

$$P(n=0)=\frac{e^{-\frac{5}{3}}\left(\frac{5}{3}\right)^{0}}{\lfloor 0}=e^{-5/3}=0.1886\approx 0.19$$

Thus, option (d) is correct option.

Ans. 4: (a)

Solution: The probability of taking $'r'$ steps out of N steps $={}^{N}C_{r}\left(\dfrac{1}{2}\right)^{r}\left(\dfrac{1}{2}\right)^{N-r}$

Total steps $=N=n+n=2n$

For taking probability of n steps out of N

$$P={}^{N}C_{n}\left(\frac{1}{2}\right)^{n}\left(\frac{1}{2}\right)^{N-n}=\frac{N!}{(N-n)!n!}\left(\frac{1}{2}\right)^{n}\left(\frac{1}{2}\right)^{N-n}=\frac{2n!}{n!n!}\left(\frac{1}{2}\right)^{2n}=\frac{2n!}{(n!)^{2}4^{n}}$$

Ans. 5: (b)

Solution: Since, it is distribution function so,

$$\langle x\rangle = \frac{\int_{-\infty}^{\infty} xf(x)dx}{\int_{-\infty}^{\infty} f(x)dx} = \frac{\int_0^{\infty} x.xe^{-\frac{x}{\lambda}}dx}{\int_0^{\infty} xe^{-\frac{x}{\lambda}}dx} = \frac{\int_0^{\infty} x^2 e^{\frac{-x}{\lambda}}dx}{\int_0^{\infty} xe^{\frac{-x}{\lambda}}dx} = 2\lambda$$

Ans. 6: (a)

Solution: Number of point in sample space $n(S)=11$

$$\left[(1,6),(2,6),(3,6),(4,6),(5,6),(6,1),(6,2),(6,3),(6,4),(6,5),(6,6)\right]$$

Number of point in population $n(P)=6^2=36$

Probability of getting atleast one '6' on face of dice $=\frac{n(S)}{n(P)}=\frac{11}{36}$

Ans. 7: (a)

Solution: $\langle x\rangle = \frac{1}{\sigma\sqrt{2\pi}}\int_{-\infty}^{\infty} x\exp\left(-\frac{x^2}{2\sigma^2}\right)dx\int_{-\infty}^{\infty}\exp\left(-\frac{\mu x}{2\sigma^2}\right)dx = 0$ (due to odd function)

Ans. 8: (d)

Solution: If we toss one fair coins hundred times, then probability of n number of head occurs at the end of 100 times is

$$^{100}C_n\left(\frac{1}{2}\right)^n\left(\frac{1}{2}\right)^{100-n}$$

Hence, the probability that same number of heads occur for both coins at the end of experiment is

$$\sum_{n=0}^{100}\left(^{100}C_n\left(\frac{1}{2}\right)^{100}\right).\left(^{100}C_n\left(\frac{1}{2}\right)^{100}\right)=\sum_{n=1}^{100}\left(^{100}C_n\right)^2\left(\frac{1}{2}\right)^{200}=\left(\frac{1}{4}\right)^{100}\sum_{n=1}^{100}\left(^{100}C_n\right)^2$$

Ans. 9: (c)

Solution: Given that probability of $R1$ blocked =1/3

Probability of $R1$ not blocked $=1-\frac{1}{3}=\frac{2}{3}$

Probability from A to B without restriction $=\frac{1}{2}$

Route $R2$ probability $= \frac{1}{2} \times \frac{2}{3}$ not blocked

Route $R3 = \frac{1}{2} \times \frac{2}{3}$

Total probability $(A \to B) = \frac{2}{3}\left[\frac{1}{2} \times \frac{2}{3} + \frac{1}{2} \times \frac{2}{3}\right] = \frac{4}{9}$

---

12. Maxima and Minima

Q1. What is the maximum number of extrema of the function $f(x) = P_k(x)e^{-\left(\frac{x^4}{4}+\frac{x^2}{2}\right)}$, where $x \in (-\infty, \infty)$ and $P_k(x)$ is an arbitrary polynomial of degree k?

(a) $k+2$ (b) $k+6$ (c) $k+3$ (d) k

JEST-2015

Q2. Consider a function $f(x) = P_k(x)e^{-(x^4+2x^2)}$ in the domain $x \in (-\infty, \infty)$, where P_k is any polynomial of degree k. What is the maximum possible number of extrema of the function?

(a) $k+3$ (b) $k-3$ (c) $k+2$ (d) $k+1$

JEST-2019

---

12. Maxima and Minima (Solution)

Ans. 1: (c)

Solution: $f(x) = P_x(x)e^{-\left(\frac{x^4}{4}+\frac{x^2}{2}\right)}$

$$f'(x) = \left[P_x'(x) + P_x(x)(-1)\left(x^3+x\right)\right]e^{-\left(\frac{x^4}{4}+\frac{x^2}{2}\right)}$$

For maximum number of extrema,

$\Rightarrow f'(x) = 0 \Rightarrow \left[P_x(x)\left(x^3+x\right) - P'(x)\right] = 0$ is polynomial of order $k+3$

From the sign scheme maximum number of extrema $= k+3$

Ans. 2: (a)

Solution: $f(x) = p_k(x)e^{-\left(x^4+2x^2\right)}$

Let $k=0$, $f(x) = \rho_0(x)e^{-\left(x^4+2x^2\right)}$

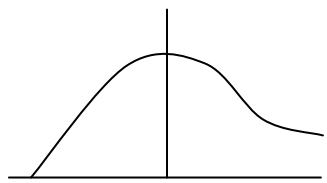

Number of extrema

$P_0(x) = 1, k = 0$

Number of extrema $=1$

$k+1 = 0+1 = 1$

---

13. Special Function

Q1. For which of the following conditions does the integral $\int_0^1 P_m(x)P_n(x)dx$ vanish for $m \neq n$, where $P_m(x)$ and $P_n(x)$ are the Legendre polynomials of order m and n respectively?

(a) all $m, m \neq n$

(b) $m-n$ is an odd integer

(c) $m-n$ is a nonzero even integer

(d) $n = m \pm 1$

JEST-2018

Q2. The Bernoulli polynomials $B_n(s)$ are defined by, $\frac{xe^{xs}}{e^x-1} = \sum B_n(s)\frac{x^n}{n!}$. Which one of the following relations is true?

(a) $\frac{xe^{x(1-s)}}{e^x-1} = \sum B_n(s)\frac{x^n}{(n+1)!}$

(b) $\frac{xe^{x(1-s)}}{e^x-1} = \sum B_n(s)(-1)^n\frac{x^n}{(n+1)!}$

(c) $\frac{xe^{x(1-s)}}{e^x-1} = \sum B_n(-s)(-1)^n\frac{x^n}{n!}$

(d) $\frac{xe^{x(1-s)}}{e^x-1} = \sum B_n(s)(-1)^n\frac{x^n}{n!}$

JEST-2015

Q3. The Euler polynomials are defined by

$$\frac{2e^{xs}}{e^x+1} = \sum_{n=0}^{\infty} E_n(s)\frac{x^n}{n!}$$

What is the value of $E_5(2)+E_5(3)$?

JEST-2019

---

13. Special Function (Solution)

Ans. 1: (c)

Solution: $\int_{-1}^{1} P_m(x) P_n(x)\, dx = \frac{2}{2x+1}\delta_{nm}$

$$2\int_{0}^{1} P_m(x) P_n(x)\, dx = \frac{2}{2x+1}\delta_{nm}$$

Only $P_m(x) P_n(x) =$ even

m	
0	even
1	odd
2	even
3	odd
4	even

$m - n =$ non zero even integer then only

$P_m(x) P_n(x) =$ even , $\qquad m \neq n \;\Delta\delta_{nm} = 0$

Ans. 2: (d)

Solution: $\frac{xe^{xS}}{e^x - 1} = \sum B_n(s) \frac{x^n}{\lfloor n}$

Put $s = (s-1)$, $\frac{xe^{x(s-1)}}{e^x - 1} = \sum B_n(s-1) \frac{x^n}{\lfloor n}$

Since, $B_n(s-1) = (-1)^n B(s)$, $\qquad \Rightarrow \frac{xe^{x(s-1)}}{e^x - 1} = \sum B_n(s)(-1)^n \frac{x^n}{\lfloor n}$

Ans. 3: 64

Solution: $\frac{2e^{xs}}{e^x + 1} = \sum_{n=0}^{\infty} E_n(s) \frac{x^n}{n!}$

$$E_n(x+1) + E_n(x) = 2x^n$$

$$E_5(x+1) + E_5(x) = 2x^5$$

$$x = 2 = 2 \times 2^5 = 64$$

---

14. Group Theory

Q1. An electronic circuit with 10000 components performs its intended function success fully with a probability 0.99 if there are no faulty components in the circuit. The probability that there are faulty components is 0.05. if there are faulty components, the circuit perform successfully with a probability 0.3. The probability that the circuit performs successfully is $\frac{x}{10000}$. What is x?

JEST-2018

Q2. If an abelian group is constructed with two distinct elements a and b such that $a^2 = b^2 = I$, where I is the group identity. What is the order order of the smallest abelian group containing a, b and I?

JEST-2018

(Solution)

14. Group Theory

Ans. 1: 9555

Ans. 2: 4

Solution: According to the question a, b and I are elements of group. The Cayley table for the group is

	I	a	b	
I	I	a	b	
a	a	I	ab	
b	b	ba	I	

For the commutative group $ab = ba$. If the order of the group is 3, then from the table we see that ab should be equal to b and ba should be equal to a.

$$ab = b \text{ and } ba = a$$

Using the commutative property we can write

$$a = b$$

But from the question a and b are distinct elements. Therefore the group will contain more than 3 elements.

The new Cayley-table is

	I	a	b	ab
I	I	a	b	ab
a	a	I	ab	b
b	b	ba	I	a
ab	ab	b	a	I

Here we have used the fact that for commutative group $ab = ba$.

From the table we see that this group is commutative and all group axioms are satisfied by the elements of group. So,

$$G = \{a, b, I, ab\}$$

The order of the group is 4.

---

15. Dimensional Analysis

Q1. Given the fundamental constants $\hbar$ (Planck's constant), G (universal gravitation constant) and c (speed of light), which of the following has dimension of length?

(a) $\sqrt{\frac{\hbar G}{c^3}}$ (b) $\sqrt{\frac{\hbar G}{c^5}}$ (c) $\frac{\hbar G}{c^3}$ (d) $\sqrt{\frac{\hbar c}{8\pi G}}$

JEST-2014

Q2. Let us write down the Lagrangian of a system as $L(x, \ddot{x}, \dddot{x}) = m x \ddot{x} + k x^2 + c x \dddot{x}$. What is the dimension of c?

(a) MLT^{-3} (b) MT^{-2} (c) MT (d) ML^2T^{-1}

JEST-2014

---

15. Dimensional Analysis (Solution)

Ans. 1: (a)

Solution: $\left[\frac{\left[ML^2T^{-1}\right]\left[M^{-1}L^3T^{-2}\right]}{L^3T^{-3}}\right]^{\frac{1}{2}} = \left[L^2\right]^{\frac{1}{2}} = L$

$$\hbar = \left[ML^2T^{-1}\right],\ G = \frac{gr^2}{m} = \left[M^{-1}L^3T^{-2}\right]$$

Ans. 2: (c)

Solution: According to dimension rule same dimension will be added or subtracted then dimension of $Mx\ddot{x} =$ dimension of $Cx\ddot{x}$

$$\left[ML^2T^{-2}\right] = \left[C\right]\left[L\right]\left[LT^{-3}\right]$$

$$\left[C\right] = \frac{\left[ML^2T^{-2}\right]}{\left[L^2T^{-3}\right]} = \left[MT\right]$$

---

16. Others

Q1. A semicircular piece of paper is folded to make a cone with the centre of the semicircle as the apex. The half-angle of the resulting cone would be:

(a) 90° (b) 60° (c) 45° (d) 30°

JEST-2016

Q2. If [x] denotes the greatest integer not exceeding x, then $\int_0^\infty [x]e^{-x}dx$

(a) $\frac{1}{e-1}$ (b) 1 (c) $\frac{e-1}{e}$ (d) $\frac{e}{e^2-1}$

JEST-2012

---

16. Others (Solution)

Ans. 1: (d)

Solution: When the semicircular piece of paper is folded to make a cone, the circumference of base is equal to the circumference of the original semicircle. Let r be the radius of the base of the cone and R be the radius of the semicircle.

Hence, $2\pi r = \pi R \Rightarrow r = \frac{R}{2}$.

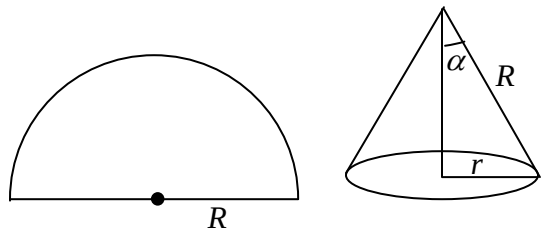

The stay height of the come will also be R.

Hence, $\sin\alpha = \frac{R/2}{R} = \frac{1}{2}$

Thus, $\alpha = 30^0$

Ans. 2: (a)

Solution: $[x]$

$0 \le x < 1 = [x] = 0$, $1 \le x < 2 = [x] = 1$, $2 \le x < 3 = [x] = 2$

Now, $\int_0^\infty [x]e^{-x}dx = \int_0^1 [x]e^{-x}dx + \int_1^2 [x]e^{-x}dx + \int_2^3 [x]e^{-x}dx + \int_3^4 [x]e^{-x}dx$

$$\Rightarrow 0 + \int_1^2 1.e^{-x}dx + \int_2^3 2.e^{-x}dx + \int_3^4 3.e^{-x}dx = \left[-e^{-x}\right]_1^2 + 2\left(-e^{-x}\right)_2^3 + 3\left(-e^{-x}\right)_3^4 + ...$$

$$= e^{-1} - e^{-2} + 2e^{-2} - 2e^{-3} + 3e^{-3} - 3e^{-4} + 4e^{-4} - 4e^{-5} +$$

$$= e^{-1} + e^{-2} + e^{-3} + e^{-4} + ...\infty$$

$$= \frac{e^{-1}}{1-e^{-1}} = \frac{1}{e-1} \qquad \left(\because\ r = \frac{e^{-2}}{e^{-1}} = e^{-2+1} = e^{-1}\right)$$

Practice Set - Classical Mechanics

JEST Previous Year Question

(2012 To 2020)

S.NO	Topic	Number of Question
1.	Generalised Co-ordinate	2
2.	Lagrangian Formulation	9
3.	Hamiltonian Formulation	2
4.	Poission Bracket	1
5.	Canonical Transformation	4
6.	Generating Function	1
7.	Phase Space	1
8.	Stability Analysis	3
9.	Small Oscillation	9
10.	Central Force	13
11.	Rigid Body	4
12.	Special Theory of Relativity	11
13.	Newton's Law One Dimensional	4
14.	Newton's Law Two Dimensional	1
15.	Conservation of Momentum	2
16.	Conservation of Energy	4
17.	Fluid Mechanics	1
18.	Pseduo Force	1
19.	Rotational Dynamics	2
Total Number of Questions		75

1. Generalised Co-ordinate

Q1. The coordinate transformation $x' = 0.8x + 0.6y, \quad y' = 0.6x - 0.8y$ represents

(a) a translation
(b) a proper rotation
(c) a reflection
(d) none of the above

JEST-2013

Q2. A block of mass M is moving on a frictionless inclined surface of a wedge of mass m under the influence of gravity. The wedge is lying on a rigid frictionless horizontal surface. The configuration can be described using the radius vectors $\vec{r}_1$ and $\vec{r}_2$ shown in the figure. How many constraints are present and what are the types?

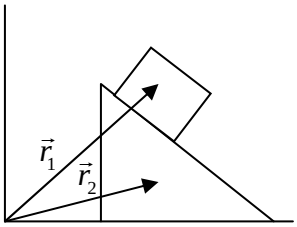

(a) One constraint; holonomic and scleronomous
(b) Two constraints; Both are holonomic; one is scleronomous and rheonomous
(c) Two constraints; Both are scleronomous; one is holonomic and other is non-holonomic.
(d) Two constraints; Both are holonomic and scleronomous

JEST-2018

---

1. Generalised Co-ordinate (Solution)

Ans. 1: (b)

Ans. 2: (d)

---

2. Lagrangian Formulation

Q1. A double pendulum consists of two equal masses m suspended by two strings of length l. What is the Lagrangian of this system for oscillations in a plane? Assume the angles θ_1, θ_2 made by the two strings are small (you can use $\cos\theta = 1 - \theta^2/2$).

Note: $\omega_0 = \sqrt{g/l}$.

(a) $L \approx ml^2\left(\dot{\theta}_1^2 + \frac{1}{2}\dot{\theta}_2^2 - \omega_0^2\theta_1^2 - \frac{1}{2}\omega_0^2\theta_2^2\right)$

(b) $L \approx ml^2\left(\dot{\theta}_1^2 + \frac{1}{2}\dot{\theta}_2^2 + \dot{\theta}_1\dot{\theta}_2 - \omega_0^2\theta_1^2 - \frac{1}{2}\omega_0^2\theta_2^2\right)$

(c) $L \approx ml^2\left(\dot{\theta}_1^2 + \frac{1}{2}\dot{\theta}_2^2 - \dot{\theta}_1\dot{\theta}_2 - \omega_0^2\theta_1^2 - \frac{1}{2}\omega_0^2\theta_2^2\right)$

(d) $L \approx ml^2\left(\frac{1}{2}\dot{\theta}_1^2 + \frac{1}{2}\dot{\theta}_2^2 + \dot{\theta}_1\dot{\theta}_2 - \omega_0^2\theta_1^2 - \omega_0^2\theta_2^2\right)$

JEST-2014

Q2. A bike stuntman rides inside a well of frictionless surface given by $z = a\left(x^2 + y^2\right)$, under the action of gravity acting in the negative z direction. $\vec{g} = -g\hat{z}$. What speed should be maintain to be able to ride at a constant height z_0 without falling down?

(a) $\sqrt{gz_0}$

(b) $\sqrt{3gz_0}$

(c) $\sqrt{2gz_0}$

(d) The biker will not be able to maintain a constant height, irrespective of speed.

JEST-2015

Q3. The Lagrangian of a particle is given by $L = \dot{q}^2 - q\dot{q}$. Which of the following statements is true?

(a) This is a free particle

(b) The particle is experiencing velocity dependent damping

(c) The particle is executing simple harmonic motion

(d) The particle is under constant acceleration.

JEST-2015

Q4. A hoop of radius a rotates with constant angular velocity ω about the vertical axis as shown in the figure. A bead of mass m can slide on the hoop without friction. If $g < \omega^2 a$ at what angle θ apart from 0 and π is the bead stationary (i.e., $\frac{d\theta}{dt} = \frac{d^2\theta}{dt^2} = 0$)?

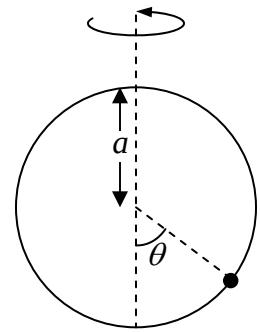

(a) $\tan\theta = \frac{\pi g}{\omega^2 a}$ (b) $\sin\theta = \frac{g}{\omega^2 a}$

(c) $\cos\theta = \frac{g}{\omega^2 a}$ (d) $\tan\theta = \frac{g}{\pi\omega^2 a}$

JEST-2016

Q5. A bead of mass M slides along a parabolic wire described by $z = 2\left(x^2 + y^2\right)$. The wire rotates with angular velocity Ω about the z- axis. At what value of Ω does the bead maintain a constant nonzero height under the action of gravity along $-\hat{z}$?

(a) $\sqrt{3g}$ (b) $\sqrt{g}$ (c) $\sqrt{2g}$ (d) $\sqrt{4g}$

JEST-2017

Q6. A possible Lagrangian for a free particle is

(a) $L = \dot{q}^2 - q^2$ (b) $L = \dot{q}^2 - q\dot{q}$ (c) $L = \dot{q}^2 - q$ (d) $L = \dot{q}^2 - \frac{1}{q}$

JEST-2017

Q7. Consider the Lagrangian

$$L = 1 - \sqrt{1 - \dot{q}^2} - \frac{q^2}{2}$$

of a particle executing oscillations whose amplitude is A. If p denotes the momentum of the particle, then $4p^2$ is

(a) $\left(A^2 - q^2\right)\left(4 + A^2 - q^2\right)$ (b) $\left(A^2 + q^2\right)\left(4 + A^2 - q^2\right)$

(c) $\left(A^2 - q^2\right)\left(4 + A^2 + q^2\right)$ (d) $\left(A^2 + q^2\right)\left(4 + A^2 + q^2\right)$

JEST-2018

Q8. Consider the motion of a particle in two dimensions given by the Lagrangian

$$L = \frac{m}{2}\left(\dot{x}^2 + \dot{y}^2\right) - \frac{\lambda}{4}\left(x + y\right)^2$$

where $\lambda > 0$. The initial conditions are given as $y(0) = 0, x(0) = 42$ meters, $\dot{x}(0) = \dot{y}(0) = 0$. What is the value of $x(t) - y(t)$ at $t = 25$ seconds in meters?

JEST-2019

Q9. A particle is to slide along the horizontal circular path on the inner surface of the funnel as shown in the figure. The surface of the funnel is frictionless. What must be the speed of the particle (in terms of r and θ) if it is to execute this motion?

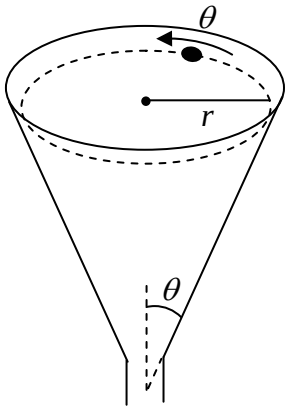

(a) $\sqrt{rg\sin\theta}$

(b) $\sqrt{rg\cos\theta}$

(c) $\sqrt{rg\tan\theta}$

(d) $\sqrt{rg\cot\theta}$

JEST-2020

---

2. Lagrangian Formulation (Solution)

Ans. 1: (b)

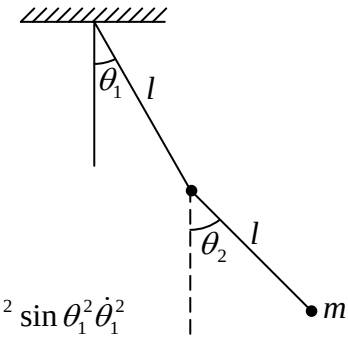

Solution: $x_1 = l\sin\theta_1,\ y_1 = l\cos\theta_1$

$$x_2 = x_1 + l\sin\theta_2 \qquad y_2 = y_1 + l\cos\theta_2$$

$$x_2 = l\sin\theta_1 + l\sin\theta_2,\quad y_2 = l\cos\theta_1 + l\cos\theta_2$$

$$\dot{x}_2 = l\cos\theta_1\dot{\theta}_1 + l\cos\theta_2\dot{\theta}_2,\ \dot{y}_2 = -l\sin\theta_1\dot{\theta}_1 - l\sin\theta_2\dot{\theta}_2$$

$$\dot{x}_2^2 + \dot{y}_2^2 = l^2\cos^2\theta_1\dot{\theta}_1^2 + l^2\cos^2\theta_2\dot{\theta}_2^2 + 2l^2\cos\theta_1\dot{\theta}_1\cos\theta_2\dot{\theta}_2 + l^2\sin\theta_1^2\dot{\theta}_1^2$$
$$+ l^2\sin\theta_2^2\dot{\theta}_2^2 + 2l^2\sin\theta_1\sin\theta_2\dot{\theta}_1\dot{\theta}_2$$

$$\Rightarrow \dot{x}_2^2 + \dot{y}_2^2 = l^2\dot{\theta}_1^2 + l^2\dot{\theta}_2^2 + 2l^2\cos(\theta_1 - \theta_2)\dot{\theta}_1\dot{\theta}_2 \text{ also } \dot{x}_1^2 + \dot{y}_1^2 = l^2\dot{\theta}_1^2$$

$$L = T - V = \frac{1}{2}m\left(\dot{x}_1^2 + \dot{y}_1^2 + \dot{x}_2^2 + \dot{y}_2^2\right) - mgy_1 - mgy_2$$

$$\Rightarrow L = \frac{1}{2}m\left(l^2\dot{\theta}_1^2 + l^2\dot{\theta}_1^2 + l^2\dot{\theta}_2^2 + 2l^2\cos(\theta_1 - \theta_2)\dot{\theta}_1\dot{\theta}_2\right) + 2mgl\cos\theta_1 + mgl\cos\theta_2$$

$$\Rightarrow L = ml^2\left[\dot{\theta}_1^2 + \frac{1}{2}\dot{\theta}_2^2 + \dot{\theta}_1\dot{\theta}_2 + \frac{2g}{2l}\left(1 - \frac{\theta_1^2}{2}\right) + \frac{1}{2}\frac{g}{l}\left(1 - \frac{\theta_2^2}{2}\right)\right] \qquad \left[\because \cos(\theta_1 - \theta_2) \approx 1\right]$$

$$\Rightarrow L = ml^2\left[\dot{\theta}_1^2 + \frac{1}{2}\dot{\theta}_2^2 + \dot{\theta}_1\dot{\theta}_2 + \frac{g}{l} - \frac{g}{l}\frac{\theta_1^2}{2} + \frac{g}{2l} - \frac{g}{2l}\frac{\theta_2^2}{2}\right]$$

comparing given options, option (b) is correct i.e.

$$L = ml^2\left(\dot{\theta}_1^2 + \frac{1}{2}\dot{\theta}_2^2 + \dot{\theta}_1\dot{\theta}_2 - \frac{\omega_0^2\dot{\theta}_1^2}{2} - \frac{1}{4}\omega_0\dot{\theta}_2^2\right)$$

Ans. 2: (c)

Solution: $z = a\left(x^2 + y^2\right)$

Using equation of constrain, we must solve the given system in cylindrical co-ordinate.

$$z = ar^2,\ \dot{z} = 2ar\dot{r} \ \Rightarrow L = \frac{1}{2}m\left(\dot{r}^2 + r^2\dot{\theta} + \dot{z}^2\right) - mgz$$

$$\Rightarrow L = \frac{1}{2}m\left(\dot{r}^2 + r^2\dot{\theta} + 4a^2r^2\dot{r}^2\right) - mgar^2 = \frac{1}{2}m\left[\dot{r}^2\left(1 + 4a^2r^2\right) + r^2\dot{\theta}^2\right] - mgar^2$$

Equation of motion

$$\frac{d}{dt}\left(\frac{\partial L}{\partial \dot{r}}\right) - \frac{\partial L}{\partial r} = 0$$

$$\Rightarrow m\ddot{r}\left(1+4a^2r^2\right)+m\dot{r}^2 4a^2 r - mr\dot{\theta}^2 + 2mgar = 0$$

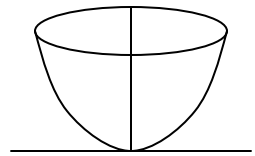

At $z = z_0,\ \dot{r} = 0,\quad r = r_0$, so, $mr_0\dot{\theta}^2 = 2mgar_0$

$$\dot{\theta}^2 = 2ga \Rightarrow \dot{\theta} = \sqrt{2ga}\ , \frac{v}{r_0} = \sqrt{2ga}\ , v = \sqrt{2ga}\cdot r_0$$

$$v = \sqrt{2ga}\cdot\left(\frac{z_0}{a}\right)^{1/2} = \sqrt{2gz_0} \qquad \left(\because z_0 = ar_0^2\right)$$

Ans. 3: (a)

Solution: $\because L = \dot{q}^2 - q\dot{q} \Rightarrow \frac{\partial L}{\partial \dot{q}} = 2\dot{q} - q \Rightarrow \frac{d}{dt}\left(\frac{\partial L}{\partial \dot{q}}\right) = 2\ddot{q} - \dot{q}$

$$\because \frac{d}{dt}\left(\frac{\partial L}{\partial \dot{q}}\right) - \frac{\partial L}{\partial q} = 0$$

$$\Rightarrow 2\ddot{q} - \dot{q} + \dot{q} = 0 \Rightarrow 2\ddot{q} = 0 \Rightarrow \frac{d^2q}{dt^2} = 0 \Rightarrow \frac{dq}{dt} = C \Rightarrow q = Ct + \alpha$$

Ans. 4: (c)

Solution: The Lagrangian of the system is

$$L = \frac{1}{2}ma^2\left(\dot{\theta}^2 + \sin^2\theta\dot{\phi}^2\right) + mga\cos\theta$$

The equation of motion is,

$$\frac{d}{dt}\left(\frac{\partial L}{\partial \dot{\theta}}\right) - \left(\frac{\partial L}{\partial \theta}\right) = 0 \Rightarrow ma^2\ddot{\theta} - ma^2\left(\sin\theta\cos\theta\dot{\phi}^2\right) + mga\sin\theta = 0$$

When bead is stationary, then

$$\frac{d\theta}{dt} = \frac{d^2\theta}{dt^2} = 0 \Rightarrow -ma^2\left(\sin\theta\cos\theta\dot{\phi}^2\right) + mga\sin\theta = 0\ ,$$

$\Rightarrow \dot{\phi} = \omega$ and $g < \omega^2 a$, then $\cos\theta = \frac{g}{\omega^2 a}$

Ans. 5: (d)

Solution: $L = \frac{1}{2}m\left(\dot{r}^2 + r^2\dot{\theta}^2 + 16r^2\dot{r}^2\right) - 2mgr^2 \Rightarrow L = \frac{1}{2}m\left(\dot{r}^2\left(1+16r^2\right) + r^2\dot{\theta}^2\right) - 2mgr^2$

The equation of motion is given by

$$\frac{d}{dt}\left(\frac{\partial L}{\partial \dot{r}}\right) - \frac{\partial L}{\partial r} = 0 \Rightarrow m\ddot{r}\left(1+16r^2\right) + 16m\dot{r}^2 r - mr\dot{\theta}^2 + 4mgr = 0$$

At equilibrium, $r = r_0$, $\dot{r} = 0$, $\ddot{r} = 0$

So, $-mr_0\dot{\theta}^2 + 4mgr_0 = 0 \Rightarrow \dot{\theta} = \Omega = \sqrt{4g}$

Ans. 6: (b)

Solution: $\frac{d}{dt}\left(\frac{\partial L}{\partial \dot{q}}\right) - \left(\frac{\partial L}{\partial q}\right) = 0 \Rightarrow 2\ddot{q} - \dot{q} + \dot{q} = 0 \Rightarrow \ddot{q} = 0$

Ans. 7: (a)

Ans. 8: 42

Solution: $L = \frac{m}{2}\left(\dot{x}^2 + \dot{y}^2\right) - \frac{\lambda}{4}\left(x + y\right)^2$

The equation of motion is

$$\frac{d}{dt}\left(\frac{\partial L}{\partial \dot{x}}\right) - \left(\frac{\partial L}{\partial x}\right) = 0 \Rightarrow m\ddot{x} + \frac{\lambda}{2}x + \frac{\lambda}{2}y = 0 \qquad \ldots(1)$$

$$\frac{d}{dt}\left(\frac{\partial L}{\partial \dot{y}}\right) - \left(\frac{\partial L}{\partial y}\right) = 0 \Rightarrow m\ddot{y} + \frac{\lambda}{2}y + \frac{\lambda}{2}x = 0 \qquad \ldots(2)$$

Subtracting equation (2) from (1) gives $m\left(\ddot{x} - \ddot{y}\right) = 0 \Rightarrow \ddot{x} - \ddot{y} = 0$

Integrating both sides with t gives

$$\dot{x} - \dot{y} = c_1$$

From the equation $\dot{x}(0) = \dot{y}(0) = 0$, there $c_1 = 0$

Hence, $\dot{x} - \dot{y} = 0$ $\qquad \ldots(3)$

Integrating both sides of this equation with t gives

$$x - y = c_2$$

Putting $x(0) = 42, y(0) = 0$ gives

$$42 - 0 = c_2 \Rightarrow 42$$

Therefore, $x - y = 42$

The value of $x - y$ is independent of t.

Therefore, at $t = 25s$

$$x(t) - y(t) = 42$$

Ans. 9: (d)

Solution: $L = \frac{1}{2}m\left(\dot{r}^2 + r^2\dot{\phi}^2 + \dot{z}^2\right) - mgz$

$$\frac{r}{2} = \tan\theta$$

$$z = r\cot\theta$$

$$L = \frac{1}{2}m\left(\dot{r}^2 + r^2\dot{\phi}^2 + \dot{r}^2\cot^2\theta\right) - mgr\cot\theta = 0$$

For circular motion, $\dot{r} = 0 \qquad \ddot{r} = 0$

$$mr\dot{\phi}^2 = mg\cot\theta$$

$$\dot{\phi} = \sqrt{\frac{g\cot\theta}{r}}$$

$$V_\tau = r\dot{\phi} = \sqrt{gr\cot\theta}$$

---

3. Hamiltonian Formulation

Q1. A dynamical system with two generalized coordinates q_1 and q_2 has Lagrangian $L = \dot{q}_1^2 + \dot{q}_2^2$. If p_1 and p_2 are the corresponding generalized momenta, the Hamiltonian is given by

(a) $\left(p_1^2 + p_2^2\right)/4$ (b) $\left(\dot{q}_1^2 + \dot{q}_2^2\right)/4$ (c) $\left(p_1^2 + p_2^2\right)/2$ (d) $\left(p_1\dot{q}_1 + p_2\dot{q}_2\right)/4$

JEST-2014

Q2. The Hamiltonian for a particle of mass m is given by $H = \dfrac{\left(p - \alpha q\right)^2}{\left(2m\right)}$, where α is a non-zero constant. Which one of the following equations is correct?

(a) $p = m\dot{q}$ (b) $\alpha\dot{p} = \dot{q}$

(c) $\ddot{q} = 0$ (d) $L = \dfrac{1}{2}m\dot{q}^2 - \alpha q\dot{q}$

JEST-2020

---

3. Hamiltonian Formulation (Solution)

Ans. 1: (a)

Solution: $H = \sum \dot{q}_i p_i - L = \dot{q}_1 p_1 + \dot{q}_2 p_2 - L$

$$\frac{\partial L}{\partial \dot{q}_1} = p_1 = 2\dot{q}_1 \Rightarrow \dot{q}_1 = \frac{p_1}{2} \text{ and } \frac{\partial L}{\partial \dot{q}_2} = p_2 = 2\dot{q}_2 \Rightarrow \dot{q}_2 = \frac{p_2}{2}$$

$$H = \frac{p_1}{2} \cdot p_1 + \frac{p_2}{2} \cdot p_2 - \frac{p_1^2}{4} - \frac{p_2^2}{4} \Rightarrow H = \frac{\left(p_1^2 + p_2^2\right)}{4}$$

Ans. 2: (c)

Solution: $H = \frac{\left(P - \alpha q\right)^2}{2m}$

$$\frac{\partial H}{\partial q} = -\dot{p}$$

$$\frac{-\alpha\left(P - \alpha q\right)}{m} = \dot{q}$$

$$p = m\dot{q} + \alpha q$$

$$\dot{p} = m\ddot{q} + \alpha\dot{q} = m\ddot{q} + \alpha\left(\frac{P - dq}{m}\right)$$

$$\alpha\frac{\left(P - \alpha q\right)}{m} = m\ddot{q} + \frac{\alpha\left(P - \alpha q\right)}{m}$$

$$m\ddot{q} = 0 = \ddot{q}$$

---

4. Poission Bracket

Q1. If the Poisson bracket $\{x,\ p\} = -1$, then the Poisson bracket $\{x^2 + p, p\}$ is ?

(a) $-2x$ (b) $2x$ (c) 1 (d) -1

JEST-2013

---

4. Poission Bracket (Solution)

Ans. 1: (a)

Solution: $\{x^2 + p, p\} = \{x^2, p\} + \{p, p\} \Rightarrow x\{x, p\} + \{x, p\}x + 0$

$\Rightarrow x(-1) + (-1)x \Rightarrow -2x$

---

5. Canonical Transformation

Q1. If the coordinate q and the momentum p form a canonical pair (q, p), which one of the sets given below also forms a canonical?

(a) $(q, -p)$ (b) (q^2, p^2) (c) $(p, -q)$ (d) $(q^2, -p^2)$

JEST-2012

Q2. (Q_1, Q_2, P_1, P_2) and (q_1, q_2, p_1, p_2) are two sets of canonical coordinates, where Q_i and q_i are the coordinates and P_i and p_i are the corresponding conjugate momenta. If $P_1 = q_2$ and $P_2 = p_1$, then which of the following relations is true?

(a) $Q_1 = q_1,\ Q_2 = p_2$ (b) $Q_1 = p_2,\ Q_2 = q_1$

(c) $Q_1 = -p_2,\ Q_2 = q_1$ (d) $Q_1 = q_1,\ Q_2 = -p_2$

JEST-2017

Q3. If (q, p) is a canonically conjugate pair, which of the following is not a canonically conjugate pair?

(a) $\left(q^2, \frac{pq^{-1}}{2}\right)$

(b) $\left(p^2, -\frac{qp^{-1}}{2}\right)$

(c) $\left(pq^{-1}, -q^2\right)$

(d) $\left(f(p) - \frac{q}{f'(p)}\right)$ where $f'(p)$ is the derivative of $f(p)$ with respect to p.

JEST-2018

Q4. Consider the following transformation of the phase space coordinates $(q, p) \to (Q, P)$

$$Q = q^a \cos bp \quad P = q^a \sin bp$$

For what values of a and b will the transformation be canonical?

(a) 1,1 (b) $\frac{1}{2}, \frac{1}{2}$ (c) $2, \frac{1}{2}$ (d) $\frac{1}{2}, 2$

JEST-2019

(Solution)

5. Canonical Transformation

Ans. 1: (c)

Solution: For canonical pair $(p,-q)$

$$=\frac{\partial p}{\partial q}\cdot\frac{\partial(-q)}{\partial p}-\frac{\partial(p)}{\partial p}\cdot\frac{\partial(-q)}{\partial q}=0-(-1)=1$$

Ans. 2: (c)

Solution: From the symmetry $Q_1=-p_2,\ Q_2=q_1$

Ans. 3: (c)

Solution: $\left(\frac{\partial\left(pq^{-1}\right)}{\partial q}.\frac{\partial\left(-q^2\right)}{\partial p}-\frac{\partial\left(pq^{-1}\right)}{\partial p}.\frac{\partial\left(-q^2\right)}{\partial q}\right)=2\neq 1$ so $\left(pq^{-1},-q^2\right)$ is not canonical .

So option (c) is correct

Ans. 4: (d)

Solution: For canonical transformation $\frac{\partial Q}{\partial q}.\frac{\partial P}{\partial p}-\frac{\partial P}{\partial q}.\frac{\partial Q}{\partial p}=1\Rightarrow abq^{2a-1}\left(\cos^2 bp+\sin^2 bp\right)=1$

$$a=\frac{1}{2},b=2$$

---

6. Generating Function

Q1. The Hamiltonian of a classical particle is given by $H(p,q)=\frac{p^2}{2m}+\frac{kq^2}{2}$. Given $F(p,q,t)=\ln(p+im\omega q)-i\alpha\omega t$ is a constant of motion (where $\omega=\sqrt{\frac{k}{m}}$). What is the value of α?

(a) 2π (b) 0 (c) 1 (d) π

JEST-2020

---

6. Generating Function (Solution)

Ans. 1: (c)

Solution: $H = \frac{P^2}{2m} + \frac{1}{2} m\omega^2 q^2$

$$F = \ln\left(p + im\omega q\right) - i\alpha\omega t$$

$$\frac{dF}{dt} = \left(F, H\right) + \frac{\partial F}{\partial t} = 0 = \frac{\partial F}{\partial q} \cdot \frac{\partial H}{\partial p} - \frac{\partial F}{\partial p} \cdot \frac{\partial H}{\partial q} + \frac{\partial F}{\partial t} = 0$$

$$= \frac{im\omega}{\left(p + im\omega q\right)} \cdot \frac{p}{m} - \frac{m\omega^2 q^2}{\left(p + im\omega q\right)} - i\alpha\omega = 0$$

$$\Rightarrow \frac{\left(i\omega p - m\omega^2 q\right)}{\left(p + im\omega q\right)} - i\alpha\omega = 0 \Rightarrow \frac{i\omega\left(p + i\omega q\right)}{\left(p + i\omega q\right)} - i\alpha\omega = 0$$

$$i\omega - i\alpha\omega = 0$$

$$\alpha = 1$$

---

7. Phase Space

Q1. The coordinate q and the momentum p of a particle satisfy

$$\frac{dq}{dt} = p, \frac{dp}{dt} = -3q - 4p$$

If $A(t)$ is the area of any region of points moving in the (q, p)-space, then the ratio $\frac{A(t)}{A(0)}$ is

(a) 1 (b) $\exp(-3t)$ (c) $\exp(-4t)$ (d) $\exp(-3t/4)$

JEST-2018

---

7. Phase Space (Solution)

Ans. 1: (c)

---

8. Stability Analysis

Q1. The acceleration experienced by the bob of a simple pendulum is

(a) maximum at the extreme positions

(b) maximum at the lowest (central) positions

(c) maximum at a point between the above two positions

(d) same at all positions

JEST-2014

Q2. Consider a Hamiltonian system with a potential energy function is given by $V(x) = x^2 - x^4$. Which of the following is correct?

(a) The system has one stable point (b) The system has two stable points

(c) The system has three stable points (d) The system has four stable points

JEST-2014

Q3. A particle of mass $1kg$ is undergoing small oscillation about the equilibrium point in the potential $V(x) = \frac{1}{2x^{12}} - \frac{1}{x^6}$ for $x > 0$ meters. The time period (in seconds) of the oscillation is

(a) $\frac{\pi}{2}$ (b) $\frac{\pi}{3}$ (c) 1.0 (d) π

JEST-2018

---

8. Stability Analysis (Solution)

Ans. 1: (a)

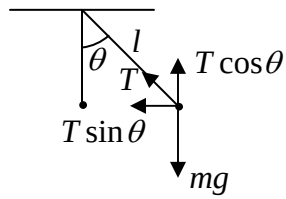

Solution: $T\sin\theta = ma$, $T\cos\theta = mg$

$a = g\tan\theta$ at $\theta = 90^{\circ}$

a is maximum at extreme position.

Ans. 2: (a)

Solution: $V(x) = x^2 - x^4$, $\dfrac{\partial V}{\partial x} = 2x - 4x^3 = 0 \Rightarrow 2x\left[1 - 2x^2\right] = 0 \Rightarrow x = \pm\dfrac{1}{\sqrt{2}},\ 0$

$$\frac{\partial^2 V}{dx^2} = 2 - 12x^2 \Rightarrow \left.\frac{\partial^2 V}{dx^2}\right|_{x=\pm\frac{1}{\sqrt{2}}} = 2 - 12\times\frac{1}{2} = -4 < 0$$

For stable point $\dfrac{\partial V}{\partial x} = 0$ and $\dfrac{\partial^2 V}{\partial x} > 0 \Rightarrow \left.\dfrac{\partial^2 V}{\partial x^2}\right|_{x=0} = 2 > 0$

Ans. 3: (c)

Solution: $V(x) = \dfrac{1}{2x^{12}} - \dfrac{1}{x^6}$

$$\frac{\partial V}{\partial x} = -\frac{1}{2}\frac{12}{x^{13}} + \frac{6}{x^7} = 0 \Rightarrow -\frac{1}{x^7}\left[\frac{1}{x^6} - 1\right] = 0$$

$$x^6 = 1$$

$$\left.\frac{\partial^2 V}{\partial x^2}\right|_{x=1} = \frac{6\times 13}{x^{14}} - \frac{6.7}{x^8} = 78 - 42 = 34 \quad \omega = \sqrt{\frac{\left.\frac{\partial^2 V}{\partial x^2}\right|_{x=1}}{m}} = \sqrt{34} = 5.8$$

$$\omega = \frac{2\pi}{T} = \sqrt{34} \Rightarrow T = \frac{2\pi}{\sqrt{34}} = \frac{2\times 3.14}{5.8} = 1.08$$

---

9. Small Oscillation

Q1. A girl measures the period of a simple pendulum inside a stationary lift and finds it to be T seconds. If the lift accelerates upward with an acceleration $\frac{g}{4}$, then the time period will be

(a) T (b) $\frac{T}{4}$ (c) $\frac{2T}{\sqrt{5}}$ (d) $2T\sqrt{5}$

JEST-2012

Q2. For small angular displacement (i.e., $\sin\theta \approx \theta$), a simple pendulum oscillates harmonically. For larger displacements, the motion

(a) becomes a periodic (b) remains periodic with the same period

(c) remains periodic with a higher period (d) remains periodic with a lower period

JEST-2012

Q3. The period of a simple pendulum inside a stationary lift is T. If the lift accelerates downwards with an acceleration $\frac{g}{4}$, the period of the pendulum will be

(a) T (b) $\frac{T}{4}$ (c) $\frac{2T}{\sqrt{3}}$ (d) $\frac{2T}{\sqrt{5}}$

JEST-2013

Q4. For the coupled system shown in the figure, the normal coordinates are $x_1 + x_2$ and $x_1 - x_2$ corresponding to the normal frequencies ω_0 and $\sqrt{3}\omega_0$ respectively.

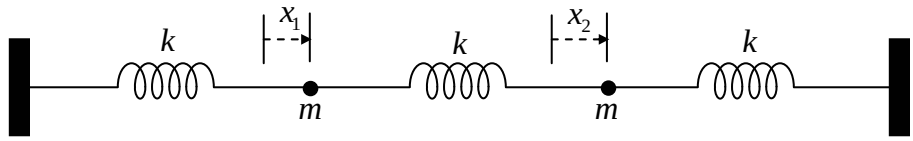

At $t = 0$, the displacements are $x_1 = A$, $x_2 = 0$, and the velocities are $v_1 = v_2 = 0$. The displacement of the second particle at time t is given by:

(a) $x_2(t) = \frac{A}{2}\left(\cos(\omega_0 t) + \cos\left(\sqrt{3}\omega_0 t\right)\right)$ (b) $x_2(t) = \frac{A}{2}\left(\cos(\omega_0 t) - \cos\left(\sqrt{3}\omega_0 t\right)\right)$

(c) $x_2(t) = \frac{A}{2}\left(\sin(\omega_0 t) - \sin\left(\sqrt{3}\omega_0 t\right)\right)$ (d) $x_2(t) = \frac{A}{2}\left(\sin(\omega_0 t) - \frac{1}{\sqrt{3}}\sin\left(\sqrt{3}\omega_0 t\right)\right)$

JEST-2016

Q5. A simple pendulum has a bob of mass 1 kg and charge 1 Coulomb. It is suspended by a massless string of length 13 m. The time period of small oscillations of this pendulum is T_0. If an electric field $\vec{E} = 100\hat{x}V/m$ is applied, the time period becomes T. What is the value of $(T_0/T)^4$?

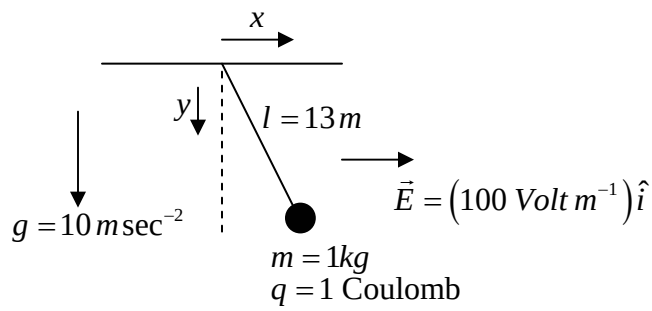

JEST-2017

Q6. Consider a simple pendulum in three dimensional space. It consists of a string length $l = 20\ cm$ and bob mass $m = 15\,kg$ attached to it as shown in the figure below. The acceleration due to gravity is downwards as shown in the figure with a magnitude $g = 10\ ms^{-2}$.

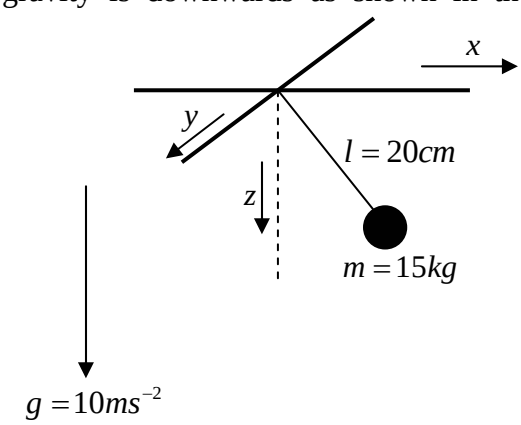

The pendulum is pulled in the $x-z$ plane to a position where the string makes an angle $\theta = \frac{\pi}{3}$ with the z-axis. It is then released an angular velocity Ω radians per second about the z-axis. What should be the value of Ω in radians per second so that the angle lie siring makes with the z-axis does not change with time?

JEST-2018

Q7. A hoop of diameter D is pivoted at the topmost point on the circumference as shown in the figure. The acceleration due to gravity g is acting downwards. What is the time period of small oscillations in the plane of the hoop?

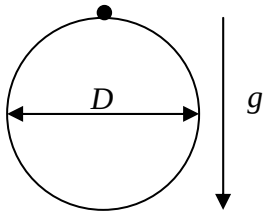

(a) $2\pi\sqrt{\frac{D}{2g}}$ (b) $2\pi\sqrt{\frac{5D}{6g}}$

(c) $2\pi\sqrt{\frac{D}{2g}}$ (d) $2\pi\sqrt{\frac{2D}{g}}$

JEST-2019

Q8. A thin uniform steel chain is $10\,m$ long with a linear mass density of $2\,kg\,m^{-1}$. The chain hangs vertically with one end attached to a horizontal axle, having a negligibly small radius compared to its length. What is the work done (in $N-m$) to slowly wind up the chain on to the axle? The acceleration due to gravity is $g = 9.81\,ms^{-1}$.

JEST-2019

Q9. Consider a particle with total energy E is oscillating in a potential $U(x) = A|x|^n$ with $A > 0$ and $n > 0$ in one dimension. Which one of the following gives the relation between the time-period of oscillation T and the total energy E:

(a) $T \propto E^{1/n-1/2}$ (b) $T \propto E^0$ (c) $T \propto E^n$ (d) $T \propto E^{1/n}$

JEST-2020

---

9. Small Oscillation (Solution)

Ans. 1: (c)

Solution: $T = 2\pi\sqrt{\frac{l}{g}}$

Since, lift accelerated upward, then

$$T' = 2\pi\sqrt{\frac{l}{g+g'}} = 2\pi\sqrt{\frac{l}{g+\frac{g}{4}}} = 2\pi\sqrt{\frac{l}{5g}\times 4} = 2\pi\sqrt{\frac{l}{g}}\times\frac{2}{\sqrt{5}} = \frac{2T}{\sqrt{5}}$$

Ans. 2: (c)

Ans. 3: (c)

Solution: $T = 2\pi\sqrt{\frac{l}{g}} \Rightarrow$ lift accelerates down wards then

$$T' = 2\pi\sqrt{\frac{l}{g-g'}} = 2\pi\sqrt{\frac{l}{g-\frac{g}{4}}} = 2\pi\sqrt{\frac{4l}{3g}} \Rightarrow 2\pi\times 2\sqrt{\frac{l}{3g}} \Rightarrow T' = \frac{2T}{\sqrt{3}}$$

Ans. 4: (b)

Solution: Using boundary condition at $t=0$, $x_2 = 0$ and $v_2 = 0$

Only $x_2(t) = \frac{A}{2}\left(\cos(\omega_0 t) - \cos\left(\sqrt{3}\omega_0 t\right)\right)$ will satisfied

Ans. 5: 101

Solution: In equilibrium condition, pendulum is tilted at angle α and is at rest

$$\therefore mg\sin\alpha = qE\cos\alpha$$

$$\tan\alpha = \frac{qE}{mg}$$

$$\therefore \sin\alpha = \frac{qE}{\sqrt{(2E)^2 + (mg)^2}}$$

$$\cos\alpha = \frac{mg}{(2E)^2 + (mg)^2}$$

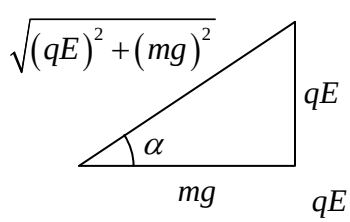

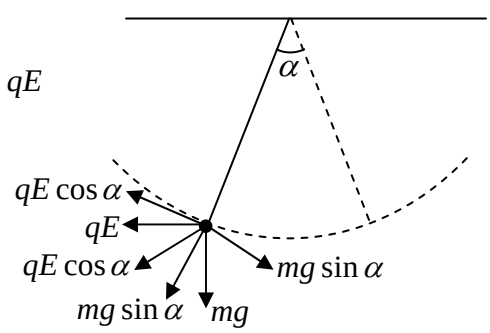

When pendulum is displaced by small angle θ the restoring force is

$$F = -\left[mg\sin(\alpha+\theta) - qE\cos(\alpha+\theta)\right]$$

$$= -\left[mg\left(\sin\alpha\cos\theta + \cos\alpha\sin\theta\right) - qE\left(\cos\alpha\cos\theta - \sin\theta\sin\alpha\right)\right]$$

$$= -\left[mg\sin\alpha\cos\theta + mg\cos\alpha\sin\theta - qE\cos\alpha\cos\theta + qE\sin\alpha\sin\theta\right]$$

for small angular difference, $\cos\theta \cong 1$ and $\sin\theta = \frac{x}{l}$

$$F = \left[\left(mg\sin\alpha - qE\cos\alpha\right) + mg\cos\alpha.\frac{x}{l} + qE\sin.\frac{x}{l}\right]$$

$$F = -\frac{x}{l}\left[mg.\frac{mg}{\sqrt{(qE)^2 + (mg)^2}} + qE \times \frac{qE}{\sqrt{(qE)^2 + (mg)^2}}\right] = -\frac{x}{l}.\frac{(mg)^2 + (qE)^2}{\sqrt{(2E)^2 + (mg)^2}}$$

$$\Rightarrow \frac{d^2x}{dl^2} + \frac{\sqrt{(mg)^2 + (qE)^2}}{ml}1 = 0$$

$$\omega^2 = \frac{\sqrt{(mg)^2}}{ml} \Rightarrow T = 2\pi\sqrt{\frac{l}{\sqrt{g^2 + \left(\frac{q}{m}E\right)^2}}} \Rightarrow T^4 = (2\pi)^4\frac{169}{10100}$$

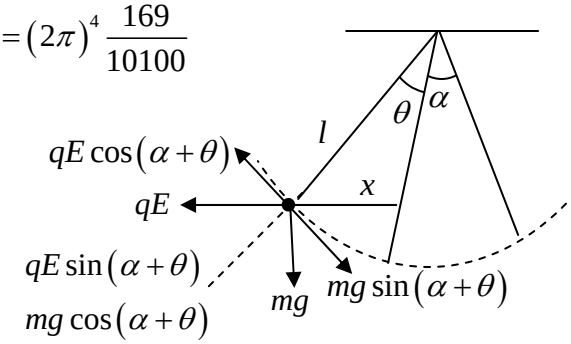

As, $T_0 = 2\pi\sqrt{\frac{l}{g}} \Rightarrow T_0^4 = (2\pi)^4\frac{169}{100}$

$$\therefore \left(\frac{T_0}{T}\right)^4 = 101$$

Ans. 6: $31.6\ m/s$

Solution: The object of mass m execute a horizontal circular orbit of radius r with angular velocity Ω. Let h be the vertical distance between the pivotal and the plane of the circular orbit and let θ be the angle subtended by eh string with the downward vertical.

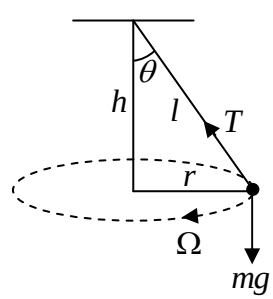

The object is subject to two forces

(i) The gravitational force mg which acts vertically downward and

(ii) The tension force T which acts upward along the string

The vertical component of the tension force ($T\cos\theta$) balances the weight of the object (mg)

i.e. $T\cos\theta = mg$ ….(i)

Since the object is executing a circular orbit, radius r, with angular velocity Ω, it experiences a centripetal force $m\Omega^2 r$

$$\therefore\ T\sin\theta = m\Omega^2 r \qquad \text{….(ii)}$$

From (i) and (ii)

$$\tan\theta = \frac{\Omega^2 r}{h} \qquad \text{….(iii)}$$

since, $\tan\theta = \frac{r}{h}$ ….(iv)

$$\therefore\ \frac{r}{h} = \frac{\Omega^2 r}{h} \Rightarrow \Omega = \sqrt{\frac{g}{h}}$$

Now, $h = l\cos\theta$

$$\therefore\ \Omega = \sqrt{\frac{g}{l\cos\theta}}$$

Given $g = 10\,ms^{-2}$, $l = 20\,cm = 20\times10^{-2}\,m$

$$\theta = \frac{\pi}{3} = 60^0$$

$$\Omega = \sqrt{\frac{10}{2\times10^{-2}\times\cos\left(60^0\right)}} = \sqrt{\frac{10}{2\times10^{-2}\times\frac{1}{2}}} = \sqrt{1000}$$

$$\therefore\ \Omega = 31.6\,m/s$$

Ans. 7: (c)

Ans. 8: 981

Solution: $l = 10\,m$

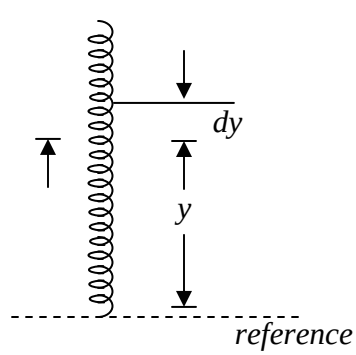

Mass to be pulled

Mass of small elementary $\frac{m}{l}\times dy$

PE of mass $= -\frac{m}{l}\times dy\times y\times g$

So work required in pulling

$$W = -\int_l dU = -\int_0 -\frac{m}{l} y\, dy \times g$$

$$= \frac{m}{l} \times \frac{l_2}{2} \times g = \frac{mgl}{2} = \frac{2 \times 10 \times 9.81 \times 10}{2} = 981\, J$$

Ans. 9: (a)

Solution: $J = \oint \sqrt{2m(E - V)}dx$

$$J \propto \int_0^{(E/A)^{1/x}} \sqrt{2m\left(E - \hbar x^n\right)}dx$$

$$J \propto \sqrt{2m}E \times \left(\frac{E}{A}\right)^{1/x} \int_0^1 \sqrt{1 - t^n}\, dt$$

$$J \propto E^{\frac{1}{n} + \frac{1}{2}}$$

$$T \propto \frac{\partial J}{\partial E}$$

$$T \propto E^{\frac{1}{n} - \frac{1}{2}}$$

---

10. Central Force

Q1. A planet orbits a massive star in a highly elliptical orbit, i.e., the total orbital energy E is close to zero. The initial distance of closest approach is R_0. Energy is dissipated through tidal motions until the orbit is circularized with a final radius of R_f. Assume that orbital angular momentum is conserved during the circularization process. then

(a) $R_f = \frac{R_0}{2}$ (b) $R_f = R_0$ (c) $R_f = \sqrt{2}R_0$ (d) $R_f = 2R_0$

JEST-2012

Q2. A binary system consists of two stars of equal mass m orbiting each other in a circular orbit under the influence of gravitational forces. The period of the orbit is T. At $t = 0$, the motion is stopped and the stars are allowed to fall towards each other. After what time t, expressed in terms of T, do they collide?

$$\int \frac{x^2 dx}{\sqrt{\alpha - x^2}} = \frac{x}{2}\sqrt{\alpha - x^2} + \frac{\alpha}{2}\sin^{-1}\left(\frac{x}{\sqrt{\alpha}}\right)$$

(a) $\sqrt{2}\tau$ (b) $\frac{\tau}{\sqrt{2}}$ (c) $\frac{\tau}{2\sqrt{2}}$ (d) $\frac{\tau}{4\sqrt{2}}$

JEST-2012

Q3. The free fall time of a test mass on an object of mass M from a height $2R$ to R is

(a) $(\pi/2+1)\sqrt{\frac{R^3}{GM}}$ (b) $\sqrt{\frac{R^3}{GM}}$ (c) $(\pi/2)\sqrt{\frac{R^3}{GM}}$ (d) $\pi\sqrt{\frac{2R^3}{GM}}$

JEST-2013

Q4. A spherical planet of radius R has a uniform density ρ and does not rotate. If the planet is made up of some liquid, the pressure at point r from the center is

(a) $\frac{4\pi\rho^2 G}{3}(R^2 - r^2)$ (b) $\frac{4\pi\rho G}{3}(R^2 - r^2)$

(c) $\frac{2\pi\rho^2 G}{3}(R^2 - r^2)$ (d) $\frac{\rho G}{2}(R^2 - r^2)$

JEST-2013

Q5. If, in a Kepler potential, the pericentre distance of particle in a parabolic orbit is r_p while the radius of the circular orbit with the same angular momentum is r_c, then

(a) $r_c = 2r_p$ (b) $r_c = r_p$ (c) $2r_c = r_p$ (d) $r_c = \sqrt{2}r_p$

JEST-2013

Q6. A classical particle with total energy E moves under the influence of a potential $V(x,y) = 3x^3 + 2x^2y + 2xy^2 + y^3$. The average potential energy, calculated over a long time is equal to,

(a) $\frac{2E}{3}$ (b) $\frac{E}{3}$ (c) $\frac{E}{5}$ (d) $\frac{2E}{5}$

JEST-2015

Q7. How is your weight affected if the Earth suddenly doubles in radius, mass remaining the same?

(a) Increases by a factor of 4 (b) Increases by a factor of 2

(c) Decreases by a factor of 4 (d) Decreases by a factor of 2

JEST-2015

Q8. The central force which results in the orbit $r = a(1+\cos\theta)$ for a particle is proportional to:

(a) r (b) r^2 (c) r^{-2} (d) None o the above

JEST-2016

Q9. Consider a particle of mass m moving under the effect of an attractive central potential given as $V = -kr^{-3}$ where $k > 0$. For a given angular momentum $L, r_0 = 3km/L^2$ corresponds to the radius of the possible circular orbit and the corresponding energy is $E_0 = \frac{L^2}{(6mr_0^2)}$. The particle is released from $r > r_0$ with an inward velocity, energy $E = E_0$ and angular momentum L. How long will be particle take to reach r_0

(a) zero (b) $2mr_0^2L^{-1}$ (c) $2\sqrt{mr_0^2}L^{-1}$ (d) Infinite

JEST-2018

Q10. What is the change in the kinetic energy of rotation of the earth if its radius shrinks by 1% ? Assume that the mass remains the same and the density is uniform.

(a) increases by 1% (b) increases by 2% (c) decreases by 1% (d) decreases by 2%

JEST-2019

Q11. In a fixed target elastic scattering experiment, a projectile of mass m, having initial velocity v_0, and impact parameter b, approaches the scatterer. It experiences a central repulsive force $f(r)=\frac{k}{r^2}(k>0)$. What is the distance of the closest approach d ?

(a) $d=\left(b^2+\frac{k}{mv_0^2}\right)^{\frac{1}{2}}$ (b) $d=\left(b^2-\frac{k}{mv_0^2}\right)^{\frac{1}{2}}$

(c) $d=b$ (d) $d=\sqrt{\frac{k}{mv_0^2}}$

JEST-2019

Q12. A particle of mass m carrying angular momentum l moves in a central potential $V(r)=-\frac{ke^{-ar}}{r}$, where k,a are positive constants. If the particle undergoes circular motion, what is the equation determining its radius r_0 ?

(a) $\frac{l^2}{mr_0}=kar_0e^{-ar_0}$ (b) $\frac{l^2}{mr_0}=ke^{-ar_0}(1+ar_0)$

(c) $\frac{l^2}{2mr_0}=ke^{-ar_0}$ (d) $\frac{l^2}{2mr_0}=ke^{-ar_0}(1+ar_0)$

JEST-2020

Q13. A particle of mass m is placed in a potential well $U(x)=cx^n$, where c is a positive constant and n is an even positive integer. If the particle is in equilibrium at constant temperature, which one of the following relations between average kinetic energy $\langle K\rangle$ and average potential energy $\langle U\rangle$ is correct?

(a) $\langle K\rangle=\frac{2}{n}\langle U\rangle$ (b) $\langle K\rangle=\langle U\rangle$ (c) $\langle K\rangle=\frac{n}{2}\langle U\rangle$ (d) $\langle K\rangle=2\langle U\rangle$

JEST-2020

---

10. Central Force (Solution)

Ans. 1: (d)

Solution: For elliptically motion $E = \frac{1}{2}m\dot{r}^2 + \frac{J^2}{2mr^2} - \frac{GMm}{r}$

$E = 0$ and closest approach is R_0, at $R_0 \Rightarrow \dot{r} = 0$

$$0 = 0 + \frac{J^2}{2mR_0^2} - \frac{GMm}{R_0} \Rightarrow \frac{J^2}{2MR_0^2} = \frac{GMm}{R_0} \Rightarrow J^2 = 2GMm^2R_0$$

From condition of circular orbit

$$\left|\frac{J^2}{mR_f^3}\right| = f(r) = -\frac{\partial V}{\partial r} \Rightarrow \frac{J^2}{mR_f^3} = \frac{GMm}{R_f^2} \Rightarrow \frac{2GMm^2R_0}{mR_f^3} = \frac{GMm}{R_f^2} \Rightarrow R_f = 2R_0$$

Ans. 2: (d)

Solution: $m\frac{d^2x}{dt^2} = -\frac{GMm}{x^2} \Rightarrow \frac{d^2x}{dt^2} = -\frac{GM}{x^2} = -\frac{A}{x^2}$

$$v\frac{dv}{dt} = \frac{-A}{x^2}\frac{dx}{dt} \Rightarrow \frac{d}{dt}\left(\frac{v^2}{2}\right) = \frac{d}{dt}\left(\frac{A}{x}\right) \Rightarrow \frac{v^2}{2} = \frac{A}{x} + C$$

when $x = R$, $v = 0$, then $c = -\frac{A}{R}$

$$\frac{v^2}{2} = \frac{A}{x} - \frac{A}{R} \Rightarrow v = \sqrt{2A}\sqrt{\frac{1}{x} - \frac{1}{R}} \Rightarrow \frac{dx}{dt} = \sqrt{\frac{2A}{R}}\sqrt{\frac{R-x}{x}}$$

$$\int_R^0 \frac{\sqrt{x}}{\sqrt{R-x}}dx = \int_0^t \sqrt{\frac{2A}{R}}dt$$

Put $x = u^2 \Rightarrow dx = 2udu$ and $x = 0, u = 0$ and also, $x = R, u = \sqrt{R}$

$$\int_{\sqrt{R}}^0 \frac{2u^2}{\sqrt{R-u^2}}du = \int_0^t \sqrt{\frac{2A}{R}}dt \Rightarrow -2\left[\frac{u}{2}\sqrt{R-u^2} + \frac{R}{2}\sin^{-1}\frac{u}{\sqrt{R}}\right]_{\sqrt{R}}^0 = \sqrt{\frac{2A}{R}}t$$

$$\Rightarrow +2\left[\frac{\sqrt{R}}{2}\sqrt{R-R} + \frac{R}{2}\sin^{-1}\frac{\sqrt{R}}{\sqrt{R}}\right] = \sqrt{\frac{2A}{R}}t \Rightarrow 2\times\frac{R}{2}\sin^{-1}1 = \sqrt{\frac{2A}{R}}t$$

$$\Rightarrow t\sqrt{\frac{2A}{R}} = 2\times\frac{R}{2}\times\frac{\pi}{2} \Rightarrow t = \frac{R\pi}{2}\times\sqrt{\frac{R}{2A}}$$

$$t = \frac{1}{2\sqrt{2}}\sqrt{\frac{R^3\pi^2}{GM}} \qquad (1)$$

and $\frac{mv^2}{R} = \frac{GMm}{R^2} \Rightarrow v^2 = \frac{GM}{R} \Rightarrow v = \frac{2\pi R}{\tau} \Rightarrow \frac{4\pi^2R^2}{\tau^2} = \frac{GM}{R} \Rightarrow \frac{4\pi^2R^3}{GM} = \tau^2$

$$\tau = 2\sqrt{\frac{R^3\pi^2}{GM}} \Rightarrow \sqrt{\frac{R^3\pi^2}{GM}} = \frac{\tau}{2} \qquad (2)$$

From (1) and (2), $t = \frac{1}{2\sqrt{2}}\frac{\tau}{2} = \frac{\tau}{4\sqrt{2}}$

Ans. 3: (a)

Solution: Equation of motion $\frac{md^2r}{dt^2} = -\frac{GMm}{r^2} \Rightarrow \frac{d^2r}{dt^2} = -\frac{GM}{r^2} \Rightarrow \frac{d^2r}{dt^2} = -\frac{A}{r^2} \qquad \because GM = A$

$$v\frac{dv}{dt} = -\frac{A}{r^2}\frac{dr}{dt} \Rightarrow \frac{d}{dt}\left(\frac{v^2}{2}\right) = \frac{d}{dt}\left(\frac{A}{r}\right) \Rightarrow \frac{v^2}{2} = \frac{A}{r} + C$$

when $r = 2R,\ v = 0$

$$\frac{0}{2} = \frac{A}{2R} + C \Rightarrow C = -\frac{A}{2R} \Rightarrow \frac{v^2}{2} = \frac{A}{r} - \frac{A}{2R} \Rightarrow v = \sqrt{\frac{2A}{r} - \frac{2A}{2R}} \Rightarrow \frac{dr}{dt} = \frac{\sqrt{2A}}{\sqrt{2R}}\sqrt{\frac{2R-r}{r}}$$

$$\int_{2R}^{R}\frac{\sqrt{r}}{\sqrt{2R-r}}dr = -\sqrt{\frac{A}{R}}\int_0^t dt$$

put $r = u^2,\ dr = 2udu$ when $r = 2R,\ u = \sqrt{2R},\ r = R, u = \sqrt{R}$

$$\int_{\sqrt{2R}}^{\sqrt{R}}\frac{u}{\sqrt{2R-u^2}} \times 2udu = -\sqrt{\frac{A}{R}}\int_0^t dt \Rightarrow -\sqrt{\frac{A}{R}}t = 2\int_{\sqrt{2R}}^{\sqrt{R}}\frac{u^2}{\sqrt{2R-u^2}}du$$

$$\Rightarrow -\sqrt{\frac{A}{R}}t = 2\left[-\frac{u}{2}\sqrt{2R-u^2} + \frac{2R}{2}\sin^{-1}\frac{u}{\sqrt{2R}}\right]_{\sqrt{2R}}^{\sqrt{R}}$$

$$\Rightarrow -\sqrt{\frac{A}{R}}t = 2\left[\frac{-\sqrt{R}}{2}\sqrt{2R-R} + \frac{2R}{2}\sin^{-1}\frac{\sqrt{R}}{\sqrt{2R}} + \frac{\sqrt{2R}}{2}\sqrt{2R-2R} - R\sin^{-1}\frac{\sqrt{2R}}{\sqrt{2R}}\right]$$

$$\Rightarrow -\sqrt{\frac{A}{R}}t = 2\left[\frac{-R}{2} + \frac{R\pi}{4} - \frac{R\pi}{2}\right] \Rightarrow t = \frac{R\sqrt{R}}{\sqrt{A}}\left(\frac{\pi}{2}+1\right) \Rightarrow t = \left(\frac{\pi}{2}+1\right)\sqrt{\frac{R^3}{GM}} \quad \because A = GM$$

Ans. 4: (c)

Solution: Pressure $dp = \frac{dm \cdot g}{A} = \frac{dm \cdot g}{4\pi r^2} = \frac{\rho \cdot 4\pi r^2 drGM \frac{r}{R^3}}{4\pi r^2}$

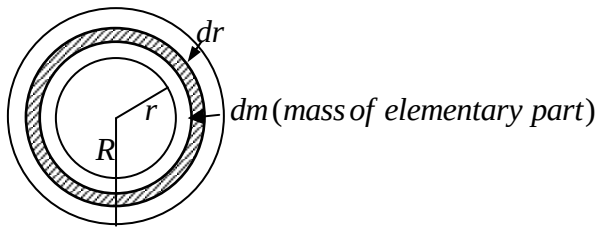

$$\Rightarrow dp = \frac{\rho \cdot 4\pi r^2 drG \cdot \rho \cdot \frac{4\pi}{3} R^3 \frac{r}{R^3}}{4\pi r^2} \Rightarrow dp = \frac{4\pi}{3}\rho^2 Grdr$$

$$\int dp = \int_r^R \frac{4\pi}{3}\rho^2 Grdr \Rightarrow p = \frac{4\pi}{3}\rho^2 G\left(\frac{r^2}{2}\right)_r^R \Rightarrow p = \frac{4\pi}{3}\rho^2 G\left(\frac{R^2}{2} - \frac{r^2}{2}\right)$$

$$\Rightarrow p = \frac{4\pi}{3}\frac{\rho^2 G}{2}\left(R^2 - r^2\right) \Rightarrow p = \frac{2\pi}{3}\rho^2 G\left(R^2 - r^2\right)$$

Ans. 5: (a)

Solution: Conic equation $\frac{l}{r} = 1 + e\cos\theta$ for parabola $e = 1$ for circle, $e = 0$, $\theta = 0$

$$\frac{l}{r_p} = 1 + 1,\ \frac{l}{r_C} = 1 \Rightarrow l = 2r_p,\ l = r_C \Rightarrow 2r_p = r_C$$

Ans. 6: (d)

Solution: If one will use virial theorem, then $\langle T \rangle = \frac{n}{2}\langle V \rangle$. If $V \propto r^n$ according to problem $n = 3$

So, $\langle E \rangle = \langle T \rangle + \langle V \rangle \Rightarrow \langle E \rangle = \frac{3}{2}\langle V \rangle \Rightarrow \langle V \rangle \Rightarrow \langle V \rangle = \frac{2}{5}\langle E \rangle$

But virial theorem is used only for conservative forces.

Force conservative $\vec{\nabla} \times \vec{F} = 0$, where $\vec{F} = -\vec{\nabla}V$

$\because V(x, y) = 3x^3 + 2x^2 y + 2y^2 x + y^3 \Rightarrow \vec{\nabla}V = \left(9x^2 + 4xy + 2y^2\right)\hat{i} + \left(2x^2 + 4yx + 3y^2\right)\hat{j}$

$\Rightarrow \vec{\nabla} \times \vec{F} = 0$ i.e., force is conservative in nature.

Therefore, option (d) is correct.

Ans. 7: (c)

Solution: $W = m \cdot \frac{GM}{R^2}$ and $W' = m \cdot \frac{GM}{(2R)^2} \Rightarrow W' = \frac{W}{4}$

Ans. 8: (c)

Solution: $r = a(1+\cos\theta) \Rightarrow u = \frac{1}{r} = \frac{1}{a(1+\cos\theta)} \Rightarrow \frac{du}{d\theta} = \frac{\sin\theta}{a(1+\cos\theta)^2}$

and $\frac{d^2u}{d\theta^2} = 2\frac{\sin^2\theta}{a(1+\cos\theta)^3} + \frac{\cos\theta}{a(1+\cos\theta)^2}$

If J is angular momentum and m is mass of particle

$$-\frac{J^2}{m}\left(\frac{d^2u}{d\theta^2}+u\right) = f\left(\frac{1}{u}\right)$$

$$\Rightarrow -\frac{J^2}{m}\left(\frac{d^2u}{d\theta^2}+u\right) = -\frac{J^2}{m}\left(\frac{2\sin^2\theta}{a(1+\cos\theta)^3} + \frac{\cos\theta}{a(1+\cos\theta)^2} + \frac{1}{a(1+\cos\theta)}\right) = f\left(\frac{1}{u}\right)$$

$$\Rightarrow -\frac{J^2}{m}\left(2\frac{1-\cos^2\theta}{a(1+\cos\theta)^3} + \frac{\cos\theta}{a(1+\cos\theta)^2} + \frac{1}{a(1+\cos\theta)}\right) = f\left(\frac{1}{u}\right)$$

Put $u = \frac{1}{a(1+\cos\theta)}$, $\cos\theta = \frac{1-au}{au}$ and solving we get

$f\left(\frac{1}{u}\right) \propto u^2$ so $f(r) \propto r^{-2}$

Ans. 9: (d)

Solution: $V_{effective} = \frac{L^2}{2mr^2} - \frac{k}{r^3}$

$$\frac{\partial V_{effective}}{\partial r} = 0 \Rightarrow -\frac{L^2}{mr^3} + \frac{3k}{r^4} = 0 \Rightarrow r_0 = \frac{L^2}{3mk}$$

$$\frac{\partial^2 V_{effective}}{\partial r^2} = +\frac{3L^2}{mr^4} - \frac{12k}{r^5} < 0 \text{ at } r = r_0$$

For the given value of energy the particle will reach at unstable equilibrium point which is not possible. So time is infinity.

Ans. 10: (b)

Ans. 11: (a)

Solution: $f(r) = \frac{k}{r^2}(k>0)$ so potential is $V(r) = \frac{k}{r}$

Conservation of angular momentum $mv_0 b = md^2\dot{\theta} \Rightarrow \dot{\theta} = \frac{v_0 b}{d^2}$

Conservation of energy is given by $\frac{mv_0^2}{2} = \frac{md^2\dot{\theta}^2}{2} + \frac{k}{d} \quad \dot{\theta} = \frac{v_0 b}{d^2}$

$$d = \left(b^2 + \frac{k}{mv_0^2}\right)^{\frac{1}{2}}$$

Ans. 12: (b)

Solution: $V_{eff} = \frac{l^2}{2mr^2} - \frac{Ke^{-\alpha r}}{r}$

For circular motion $\frac{\partial V_{eff}}{\partial r} = 0 \qquad r = r_0$

$$\left(\frac{-l^2}{mr^3} + \frac{Ke^{-dr}}{r^2} + \frac{Ke^{-\alpha r}}{r}\right)\Bigg|_{r=r_0} = 0 \Rightarrow \frac{-l^2}{mr_0^3} + \frac{Ke^{-\alpha r_0}}{r_0^2} + \frac{Ke^{-\alpha r_0}}{r_0} = 0$$

$$\Rightarrow \frac{l^2}{mr_0^3} = \frac{Ke^{-\alpha r_0}}{r_0^2} + \frac{Ke^{-\alpha r_0}}{r_0} \Rightarrow \frac{l^2}{mr_0^3} = Ke^{-\alpha r_0}\left[\frac{1}{r_0^2} + \frac{\alpha}{r_0}\right]$$

$$\Rightarrow \frac{l^2}{mr_0} = Ke^{-\alpha r_0}\left[1 + \alpha r_0\right]$$

Ans. 13: (c)

Solution: $V(x) = cx^n$

$$V = ar^{n+1}$$

$$\langle T \rangle = \frac{n+1}{2}\langle V \rangle$$

$$U(x) = cx^n$$

$$\langle K \rangle = \frac{n}{2}\langle U \rangle$$

---

11. Rigid Body

Q1. Two point objects A and B have masses $1000\,kg$ and $3000\,kg$ respectively. They are initially at rest with a separation equal to $1\,m$. Their mutual gravitational attraction then draws them together. How far from A's original position will they collide?

(a) $\frac{1}{3}m$ (b) $\frac{1}{2}m$ (c) $\frac{2}{3}m$ (d) $\frac{3}{4}m$

JEST-2014

Q2. A cylindrical shell of mass m has an outer radius b and an inner radius a. The moment of inertia of the shell about the axis of the cylinder is:

(a) $\frac{1}{2}m\left(b^2-a^2\right)$ (b) $\frac{1}{2}m\left(b^2+a^2\right)$ (c) $m\left(b^2+a^2\right)$ (d) $m\left(b^2-a^2\right)$

JEST-2016

Q3. A rod of mass m and length l is suspended from two massless vertical springs with a spring constants k_1 and k_2. What is the Lagrangian for the system, if x_1 and x_2 be the displacements from equilibrium position of the two ends of the rod?

(a) $\frac{m}{8}\left(\dot{x}_1^2+2\dot{x}_1\dot{x}_2+\dot{x}_2^2\right)-\frac{1}{2}k_1x_1^2-\frac{1}{2}k_2x_2^2$

(b) $\frac{m}{2}\left(\dot{x}_1^2+\dot{x}_1\dot{x}_2+\dot{x}_2^2\right)-\frac{1}{4}\left(k_1+k_2\right)\left(x_1^2+x_2^2\right)$

(c) $\frac{m}{6}\left(\dot{x}_1^2+x_1\dot{x}_2+\dot{x}_2^2\right)-\frac{1}{2}k_1x_1^2-\frac{1}{2}k_2x_2^2$

(d) $\frac{m}{2}\left(\dot{x}_1^2-2\dot{x}_1\dot{x}_2+\dot{x}_2^2\right)-\frac{1}{4}\left(k_1-k_2\right)\left(x_1^2+x_2^2\right)$

JEST-2017

Q4. A toy car is made from a rectangular block of mass M and four disk wheels of mass m and radii r. The car is attached to a vertical wall by a massless horizontal spring with spring constant k and constrained to move perpendicular to the wall. The coefficient of static friction between the wheel of the car and the floor is μ. The maximum amplitude of oscillations of the car above which the wheels start slipping is

(a) $\dfrac{\mu g(M+2m)(M+4m)}{mk}$

(b) $\dfrac{\mu g(M^2-m^2)}{Mk}$

(c) $\dfrac{\mu g(M+m)^2}{2mk}$

(d) $\dfrac{\mu g(M+4m)(M+6m)}{2mk}$

JEST-2017

---

11. Rigid Body (Solution)

Ans. 1: (d)

Solution: Since gravitational force is conservative, therefore they collide at their centre of mass

$$m_1 x = (1-x)m_2$$

$$x = 3(1-x) \Rightarrow x = \frac{3}{4}$$

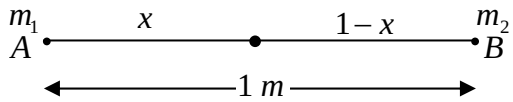

Ans. 2: (b)

Solution: $\int_a^b x^2 dm = \frac{m}{\pi\left(b^2-a^2\right)}\int_a^b x^2 2\pi x dx = \frac{m}{2}\left(b^2+a^2\right)$

Ans. 3: (c)

Solution: $T = \frac{1}{2}MV_{c.m}^2 + \frac{1}{2}I_{c.m}\omega^2 = \frac{1}{2}m\left(\frac{\dot{x}_1+\dot{x}_2}{2}\right)^2 + \frac{1}{2}\frac{ml^2}{12}\dot{\theta}^2$

Potential energy is, $V = \frac{1}{2}kx_1^2 + \frac{1}{2}kx_2^2$

$\sin\theta = \frac{x_2-x_1}{l}$ for small oscillation $\theta = \frac{x_2-x_1}{l} = \dot{\theta} = \frac{\dot{x}_2-\dot{x}_1}{l}$

$$L = \frac{1}{2}m\left(\frac{\dot{x}_1+\dot{x}_2}{2}\right)^2 + \frac{1}{2}\frac{ml^2}{12}\left(\frac{\dot{x}_1-\dot{x}_2}{l}\right)^2 - \frac{1}{2}kx_1^2 - \frac{1}{2}kx_2^2$$

$$= \frac{m}{6}\left(\dot{x}_1^2 + x_1\dot{x}_2 + \dot{x}_2^2\right) - \frac{1}{2}k_1x_1^2 - \frac{1}{2}k_2x_2^2$$

Ans. 4: (d)

Solution: If F is force on each wheel then

$$kx - 4F = Ma \qquad \text{(i)}$$

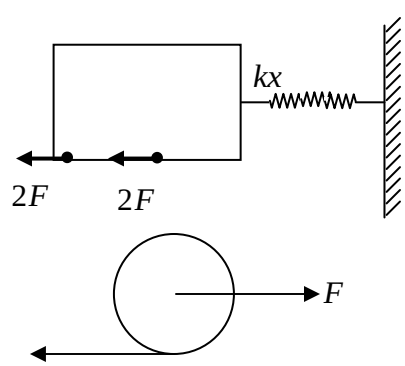

For each wheel

$$F_f = \mu\left(mg + \frac{M}{4}g\right)$$

$$F - \mu\left(mg + \frac{M}{4}g\right) = ma$$

When Torque is balanced about bottom most point

$$FR = \left(\frac{3}{2}mR^2\right)\left(\frac{a}{R}\right) = \frac{3}{2}ma$$

$$a = \frac{2\mu\left(mg + \frac{M}{4}g\right)}{m}$$

Putting in equation (i)

$$kx - 6ma = Ma$$

$$kx = (M + 6m)a = \frac{\mu(M + 6m)(4m + M)g}{2m}$$

$$x = \frac{\mu(M + 6m)(4m + M)g}{2mk}$$

---

12. Special Theory of Relativity

Q1. In a certain inertial frame two light pulses are emitted at point $5\,km$ apart and separated in time by $5\,\mu s$. An observer moving at a speed V along the line joining these points notes that the pulses are simultaneous. Therefore V is

(a) $0.7c$ (b) $0.8c$ (c) $0.3c$ (d) $0.9c$

JEST-2012

Q2. In an observer's rest frame, a particle is moving towards the observer with an energy E and momentum P. If c denotes the velocity of light in vacuum, the energy of the particle in another frame moving in the same direction as particle with a constant velocity v is

(a) $\frac{(E+vP)}{\sqrt{1-(v/c)^2}}$ (b) $\frac{(E-vP)}{\sqrt{1-(v/c)^2}}$ (c) $\frac{(E+vP)}{\left[1-(v/c)^2\right]^2}$ (d) $\frac{(E-vP)}{\left[1-(v/c)^2\right]^2}$

JEST-2013

Q3. Under a Galilean transformation, the coordinates and momenta of any particle or system transform as: $t'=t$, $\vec{r}\,'=\vec{r}+\vec{v}t$ and $\vec{p}\,'=\vec{p}+m\vec{v}$ where $\vec{v}$ is the velocity of the boosted frame with respect to the original frame. A unitary operator carrying out these transformations for a system having total mass M, total momentum $\vec{P}$ and centre of mass coordinate $\vec{X}$ is

(a) $e^{iM\,\vec{v}.\vec{X}/\hbar}e^{it\vec{v}.\vec{P}/\hbar}$ (b) $e^{iM\,\vec{v}.\vec{X}/\hbar}e^{-it\vec{v}.\vec{P}/\hbar}e^{-iMv^2t/(2\hbar)}$

(c) $e^{iM\,\vec{v}.\vec{X}/\hbar}e^{it\vec{v}.\vec{P}/\hbar}e^{iMv^2t/(2\hbar)}$ (d) $e^{it\vec{v}.\vec{P}/\hbar}e^{-iMv^2t/(2\hbar)}$

JEST-2013

Q4. A K meson (with a rest mass of $494\ MeV$) at rest decays into a muon (with a rest mass of $106\,MeV$) and a neutrino. The energy of the neutrino, which can be massless, is approximately

(a) $120\ MeV$ (b) $236\ MeV$ (c) $300\,MeV$ (d) $388\,MeV$

JEST-2013

Q5. A light beam is propagating through a block of glass with index of refraction n. If the glass is moving at constant velocity v in the same direction as the beam, the velocity of the light in the glass block as measured by an observer in the laboratory is approximately

(a) $u = \frac{c}{n} + v\left(1 - \frac{1}{n^2}\right)$ (b) $u = \frac{c}{n} - v\left(1 - \frac{1}{n^2}\right)$

(c) $u = \frac{c}{n} + v\left(1 + \frac{1}{n^2}\right)$ (d) $u = \frac{c}{n}$

JEST-2013

Q6. The velocity of a particle at which the kinetic energy is equal to its rest energy is (in terms of c, the speed of light in vacuum)

(a) $\sqrt{3}c/2$ (b) $3c/4$ (c) $\sqrt{3/5}c$ (d) $c/\sqrt{2}$

JEST-2013

Q7. In a certain inertial frame two light pulses are emitted, a distance 5 km apart and separated by $5\mu s$. An observer who is traveling, parallel to the line joining the points where the pulses are emitted, at a velocity v with respect to this frame notes that the pulses are simultaneous. Therefore v is

(a) $0.7c$ (b) $0.8c$ (c) $0.3c$ (d) $0.9c$

JEST-2014

Q8. A monochromatic wave propagates in a direction making an angle 60° with the x-axis in the reference frame of source. The source moves at speed $v = \frac{4c}{5}$ towards the observer. The direction of the (cosine of angle) wave as seen by the observer is

(a) $\cos\theta' = \frac{13}{14}$ (b) $\cos\theta' = \frac{3}{14}$ (c) $\cos\theta' = \frac{13}{6}$ (d) $\cos\theta' = \frac{1}{2}$

JEST-2014

Q9. The distance of a star from the Earth is 4.25 light years, as measured from the Earth. A space ship travels from Earth to the star at a constant velocity in 4.25 years, according to the clock on the ship. The speed of the space ship in units of the speed of light is,

(a) $\frac{1}{2}$ (b) $\frac{1}{\sqrt{2}}$ (c) $\frac{2}{3}$ (d) $\frac{1}{\sqrt{3}}$

JEST-2015

Q10. Light takes approximately 8 minutes to travel from the Sun to the Earth. Suppose in the frame of the Sun an event occurs at $t = 0$ at the Sun and another event occurs on Earth at $t = 1$ minute. The velocity of the inertial frame in which both these events are simultaneous is:

(a) $\frac{c}{8}$ with the velocity vector pointing from Earth to Sun

(b) $\frac{c}{8}$ with the velocity vector pointing from Sun to Earth

(c) The events can never be simultaneous - no such frame exists

(d) $c\sqrt{1-\left(\frac{1}{8}\right)^2}$ with velocity vector Pointing from to Earth

JEST-2016

Q11. A person on Earth observes two rockets A and B directly approaching each other with speeds $0.8c$ and $0.6c$ respectively. At a time when the distance between the rockets is observed to be $4.2\times10^8\ m$, the clocks of the rockets and the Earth are synchronized to $t = 0\,s$. The time of collision (in seconds) of the two rockets as measured in rocket $A's$ frame is $\frac{x}{10}$. What is x?

JEST-2018

(Solution)

12. Special Theory of Relativity

Ans. 1: (c)

Solution: $\Delta t = 0$, $t_2' - t_1' = 5\mu s$, $x_2' - x_1' = 5km$, $v = -V$

$$t_2 - t_1 = \frac{t_2' + \left(\frac{-V}{C^2}\right)x_2'}{\sqrt{1-\frac{V^2}{C^2}}} - \frac{t_1' + \left(\frac{-V}{C^2}\right)x_1'}{\sqrt{1-\frac{V^2}{C^2}}}$$

$$\Rightarrow \frac{\left[\left(t_2' - t_1'\right) - \frac{V}{C^2}\left(x_2' - x_1'\right)\right]}{\sqrt{1-\frac{V^2}{C^2}}} = 0 \Rightarrow 5\times10^{-6} - \frac{V}{C^2}\times 5\times10^{3} = 0$$

$$\Rightarrow \frac{V}{C^2} = \frac{5\times10^{-6}}{5\times10^{3}} = 10^{-9}$$

$$\Rightarrow V = 3\times10^{8}\times C\times10^{-9} = 0.3c$$

Ans. 2: (a)

Solution: $t' = \dfrac{t + \frac{vx}{c^2}}{\sqrt{1-\frac{v^2}{c^2}}} \Rightarrow \dfrac{x'}{c} = \dfrac{\frac{x}{c} + \frac{v}{c^2}x}{\sqrt{1-\frac{v^2}{c^2}}} \Rightarrow x' = \dfrac{x + \frac{v}{c}x}{\sqrt{1-\frac{v^2}{c^2}}} \because x = ct, \quad x' = ct'$

Now $x' = E', \quad x = E \Rightarrow E' = \dfrac{E + \frac{E}{c}v}{\sqrt{1-\frac{v^2}{c^2}}} \Rightarrow E = mc^2, \quad E = Pc \Rightarrow P = \dfrac{E}{c} \Rightarrow E' = \dfrac{E + Pv}{\sqrt{1-\frac{v^2}{c^2}}}$

Ans. 3: (b)

Ans. 4: (b)

Solution: $k \to \mu + \nu, \quad E_\nu = \dfrac{\left(m_k^2 - m_\mu^2\right)c^2}{2m_k} = \dfrac{\left(\frac{494}{c^2}\times\frac{494}{c^2} - \frac{106}{c^2}\times\frac{106}{c^2}\right)c^2}{2\times\frac{494}{c^2}}$

$$\Rightarrow \frac{244036 - 11236}{988} = 235.6275 \approx 236 \text{ MeV}$$

Ans. 5: (a)

Solution: now $u=\dfrac{v+\dfrac{c}{n}}{1+\dfrac{v\cdot c}{c^2\cdot n}}=\left(v+\dfrac{c}{n}\right)\left(1+\dfrac{v}{cn}\right)^{-1}=\left(v+\dfrac{c}{n}\right)\left(1-\dfrac{v}{cn}+\dfrac{v^2}{c^2n^2}\right)$

$$=v-\frac{v^2}{cn}+\frac{v^3}{c^2n^2}+\frac{c}{n}-\frac{v}{cn^2}+\frac{cv^2}{cn^3}\Rightarrow u=\frac{c}{n}+v\left(1-\frac{1}{n^2}\right)$$

Ans. 6: (a)

Solution: $K.E=mc^2-m_0c^2$, rest mass energy $=m_0c^2$

$K.E.=$ rest mass energy

$mc^2-m_0c^2=m_0c^2\Rightarrow mc^2=2m_0c^2$

$$\frac{m_0}{\sqrt{1-\dfrac{v^2}{c^2}}}c^2=2m_0c^2\Rightarrow\frac{1}{\sqrt{1-\dfrac{v^2}{c^2}}}=2\Rightarrow 4\left(1-\frac{v^2}{c^2}\right)=1\Rightarrow 4\frac{v^2}{c^2}=3\Rightarrow v=\frac{\sqrt{3}}{2}c$$

Ans. 7: (c)

Solution: $\left(x_2'-x_1'\right)=5\times10^3\ m,\ t_2'-t_1'=5\times10^{-6}\sec$

$$\left(t_2-t_1\right)=\frac{t_2'+\left(\dfrac{-v}{c^2}x_2'\right)}{\sqrt{1-\dfrac{v^2}{c^2}}}-\frac{t_1'+\left(\dfrac{-v}{c^2}x_1'\right)}{\sqrt{1-\dfrac{v^2}{c^2}}}=\frac{\left[\left(t_2'-t_1'\right)-\dfrac{v}{c^2}\left(x_2'-x_1'\right)\right]}{\sqrt{1-\dfrac{v^2}{c^2}}}$$

$$\because t_2-t_1=5\times10^{-6}-\frac{v}{c^2}5\times10^3=0\Rightarrow v=0.3c$$

Ans. 8: (a)

Solution: $v=\dfrac{4c}{5}$, $u_x'=c\cos60^\circ=\dfrac{c}{2}$, $u_y'=c\sin60^\circ=\dfrac{\sqrt{3}}{2}c$

Now $u_x=\dfrac{\dfrac{c}{2}+\dfrac{4}{5}c}{1+\dfrac{c}{2}\cdot\dfrac{4c}{5c^2}}=\dfrac{13c}{14}\Rightarrow\cos\theta=\dfrac{13}{14}$

Ans. 9: (b)

Solution: Proper life-time $\Delta t_0 = \frac{4.25}{c}, \Delta t = \frac{4.25}{v}$

$$\Delta t = \frac{\Delta t_0}{\sqrt{1-v^2/c^2}} \Rightarrow \frac{4.25}{v} = \frac{4.25/c}{\sqrt{1-v^2/c^2}} \Rightarrow \left(\frac{v^2}{c^2}\right) = \left(1-\frac{v^2}{c^2}\right) \Rightarrow v = \frac{1}{\sqrt{2}}c$$

Ans. 10: (a)

Solution: $x_2' - x_1' = c \times 8 \times 60$, $t_2' - t_1' = 60$

$$t_2 - t_1 = 0 \Rightarrow \frac{t_2' + \frac{vx_2'}{c^2}}{\sqrt{1-\frac{v^2}{c^2}}} - \frac{t_1' + \frac{vx_1'}{c^2}}{\sqrt{1-\frac{v^2}{c^2}}} = 0 \Rightarrow t_2' - t_1' + \frac{v}{c^2}\left(x_2' - x_1'\right) = 0$$

$$t_2' - t_1' + \frac{v}{c^2}\left(x_2' - x_1'\right) = 0 \Rightarrow 60 + \frac{v}{c^2}c \times 8 \times 60 = 0 \Rightarrow v = -\frac{c}{8}$$

Negative sign indicate frame is moving with the velocity $\frac{c}{8}$ vector pointing from Earth to Sun.

Ans. 11: 5.3

Solution: $v = 0.8c$, $u_x' = 0.6$

$$u_x = \frac{u_x' + v}{1 + \frac{u_x' v}{c^2}} = \frac{1.4}{1.48}c$$

$$l = l_0\sqrt{1-\frac{v^2}{c^2}} = 4.2 \times 10^8 \sqrt{1-0.64} = 4.2 \times 10^8 \times 0.36$$

$$t = \frac{l}{u_x} = \frac{4.2 \times 10^8 \times 0.36}{0.94 \times 3 \times 10^8} = 0.53 = \frac{x}{10} \Rightarrow x = 5.3$$

---

13. Newton's Law One Dimensional

Q1. A particle of mass m is thrown upward with velocity v and there is retarding air resistance proportional to the square of the velocity with proportionality constant k. If the particle attains a maximum height after time t, and g is the gravitational acceleration, what is the velocity?

(a) $\sqrt{\frac{k}{g}}\tan\left(\sqrt{\frac{g}{k}}t\right)$ (b) $\sqrt{gk}\tan\left(\sqrt{\frac{g}{k}}t\right)$ (c) $\sqrt{\frac{g}{k}}\tan\left(\sqrt{gk}t\right)$ (d) $\sqrt{gk}\tan\left(\sqrt{gk}t\right)$

JEST-2013

Q2. A small mass M hangs from a thin string and can swing like a pendulum. It is attached above the window of a car. When the car is at rest, the string hangs vertically. The angle made by the string with the vertical when the car has a constant acceleration $a = 1.2\, m/s^2$ is approximately

(a) 1^0 (b) 7^0 (c) 15^0 (d) 90^0

JEST-2013

Q3. A block of mass M rests on a plane inclined at an angle θ with respect to the horizontal. A horizontal force $F = Mg$ is applied to the block If μ is the static friction between the block and the plane, the range of θ so that the block remains stationary is

(a) $-\mu \le \tan\theta \le \mu$ (b) $1-\mu \le \cot\theta \le 1+\mu$

(c) $\frac{1-\mu}{1+\mu} \le \tan\theta \le \frac{1+\mu}{1-\mu}$ (d) $\frac{1-\mu}{1+\mu} \le \cot\theta \le \frac{1+\mu}{1-\mu}$

JEST-2018

Q4. A bullet with initial speed v_0 is fired at a log of wood. The resistive force by wood on the bullet is given by ηv^{α}, where $\alpha < 1$. What is the time taken to stop the bullet inside the wood log?

(a) $\frac{m}{\eta}\frac{v_0^{\alpha-1}}{1-\alpha}$ (b) $\frac{m}{\eta}\frac{v_0^{\alpha+1}}{\alpha+1}$ (c) $\frac{m}{\eta}\frac{v_0^{1-\alpha}}{1-\alpha}$ (d) $\frac{\eta}{m}\frac{v_0^{1-\alpha}}{1-\alpha}$

JEST-2019

---

13. Newton's Law One Dimensional (Solution)

Ans. 1: (c)

Solution: Equation of motion $\frac{mdv}{dt} = mg + kv^2 \Rightarrow \frac{dv}{dt} = g + \frac{k}{m}v^2 \Rightarrow \frac{dv}{g + \frac{k}{m}v^2} = dt$

$$\Rightarrow \int \frac{dv}{g + \frac{k}{m}v^2} = \int dt \Rightarrow \int \frac{dv}{\frac{k}{m}\left(\frac{gm}{k} + v^2\right)} = \int dt \Rightarrow \frac{m}{k} \times \frac{1}{\sqrt{\frac{gm}{k}}} \tan^{-1} \frac{v}{\sqrt{\frac{gm}{k}}} = t$$

$$\Rightarrow v = \sqrt{\frac{mg}{k}} \tan\left(\sqrt{\frac{kg}{m}} \cdot t\right)$$

Ans. 2: (b)

Solution: $T\sin\theta = ma$, $T\cos\theta = mg$, $\tan\theta = \frac{a}{g} \Rightarrow \theta = \tan^{-1}\frac{a}{g} = \tan^{-1}\left(\frac{1.2}{9.8}\right) = 6.98^0 \approx 7^0$

Ans. 3: (c)

Solution: The free body diagram of the block is shown below:

The normal force on the block can be calculated using Newton's second law in the direction perpendicular to the incline.

$$N - Mg\cos\theta - Mg\sin\theta = 0$$

$$\Rightarrow N = Mg\left(\sin\theta + \cos\theta\right)$$

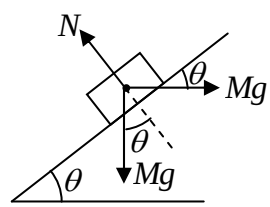

Maximum value of static frictional force

$$f_s = \mu Mg\left(\sin\theta + \cos\theta\right)$$

The coefficient μ tells us that $\left|F_f\right| \le \mu N$. Using Eq this inequality becomes

$$Mg\left|\sin\theta - \cos\theta\right| \le \mu Mg\left(\cos\theta + \sin\theta\right) \qquad \ldots\ldots(1).$$

The absolute value here signifies that we must consider two cases:

- If $\tan\theta \ge 1$, then Eq.(1) becomes

$$\sin\theta - \cos\theta \le \mu\left(\cos\theta + \sin\theta\right) \qquad \Rightarrow \qquad \tan\theta \le \frac{1+\mu}{1-\mu}.$$

We divided by $1-\mu$, so this inequality is valid if $\mu < 1$, we see from the first inequality here that any value of θ (subject to our assumption, $\tan\theta \le 1$) works.

- If $\tan\theta \le 1$, then Eq. (1) becomes

$$-\sin\theta + \cos\theta \le \mu\left(\cos\theta + \sin\theta\right) \qquad \Rightarrow \qquad \tan\theta \ge \frac{1-\mu}{1+\mu}.$$

Putting these two ranges for θ together, we have

$$\frac{1-\mu}{1+\mu} \le \tan\theta \le \frac{1+\mu}{1-\mu}.$$

Ans. 4: (c)

Solution: $m\dfrac{dv}{dt} = -\eta v^{\alpha} \Rightarrow \int_0^t dt = -\dfrac{m}{\eta}\int_{v_0}^{0}\dfrac{dv}{v^{\alpha}} = \dfrac{m}{\eta}\dfrac{v_0^{1-\alpha}}{1-\alpha}$

---

14. Newton's Law Two Dimensional

Q1. Two joggers A and B are running at a steady pace around a circular track. A takes T_A minutes whereas B takes $T_B\left(>T_A\right)$ minutes to complete one round. Assuming that they have started together, what will be time taken by A to overtake B for the first time?

(a) $\dfrac{2\pi}{T_A-T_B}$ (b) $\dfrac{1}{T_A}-\dfrac{1}{T_B}$ (c) $\dfrac{1}{T_A+T_B}$ (d) $\left(\dfrac{1}{T_A}-\dfrac{1}{T_B}\right)^{-1}$

JEST-2019

---

14. Newton's Law Two Dimensional (Solution)

Ans. 1: (d)

Solution: $v_{relative} = v_A - v_B \Rightarrow T\left(v_A - v_B\right) = 2\pi R$

$$TR\left(\omega_A - \omega_B\right) = 2\pi R \Rightarrow TR\left(\frac{2\pi}{T_A} - \frac{2\pi}{T_B}\right) = 2\pi R \Rightarrow T = \left(\frac{1}{T_A} - \frac{1}{T_B}\right)^{-1}$$

---

15. Conservation of Momentum

Q1. Consider a point particle A of mass m_A colliding elastically with another point particle B of mass m_B at rest, where $\frac{m_B}{m_A} = \gamma$. After collision, the ratio of the kinetic energy of particle B to the initial kinetic energy of particle A is given by

(a) $\frac{4}{\gamma + 2 + \frac{1}{\gamma}}$ (b) $\frac{2}{\gamma + \frac{1}{\gamma}}$ (c) $\frac{2}{\gamma + 2 - \frac{1}{\gamma}}$ (d) $\frac{1}{\gamma}$

JEST-2017

Q2. A ball comes in from the left with speed 1 (in arbitrary units) and causes a series of collisions. The other four balls shown in the figure are initially at rest. The initial motion is shown below (the number in the circle indicate the object's relative mass). This initial velocities of the balls shown in the figure are represented as $[1, 0, 0, 0, 0]$.

A negative sign means that the velocity is directed to the left. All collisions are elastic. Which of the following indicates the velocities of the balls after all the collisions are completed?

(a) $\left[-\frac{1}{2}, -\frac{1}{2}, 0, 0, \frac{1}{2}\right]$ (b) $\left[-\frac{1}{3}, 0, 0, 0, \frac{2}{3}\right]$

(c) $\left[-\frac{1}{2}, 0, 0, 0, \frac{3}{4}\right]$ (d) $\left[-\frac{1}{2}, 0, 0, 0, \frac{1}{2}\right]$

JEST-2018

---

15. Conservation of Momentum (Solution)

Ans. 1: (a)

Solution: Before Collision After Collision

Since, $\vec{P}_1 = \vec{P}_2$ $\left(\vec{F}_{ext} = 0\right)$

$$\Rightarrow m_A u + 0 = m_B v_B + m_A u_A$$

$$\Rightarrow u = v_A + \gamma v_B$$

Also, $KE_1 = KE_2$

$$\Rightarrow \frac{1}{2} m_A u^2 + 0 = \frac{1}{2} m_A v_A^2 + \frac{1}{2} m_B v_B^2$$

On solving, we get $v_B = \dfrac{2\gamma u}{\gamma + \gamma^2} \Rightarrow \dfrac{v_B}{u} = \dfrac{2}{\gamma + 1}$

$$\frac{KE_B}{KE_A} = \frac{\frac{1}{2} m_B v_B^2}{\frac{1}{2} m_A u^2} = \gamma \times \left(\frac{2}{\gamma + 1}\right)^2 = \frac{4\gamma}{\gamma^2 + 2\gamma + 1} = \frac{4}{\gamma + 2 + \frac{1}{\gamma}}$$

Thus, option (a) is correct.

Ans. 2: (b)

Solution: $ds =$ 2 balls of same mass have elastic collision, after collision. First ball stops and second moves with velocity of 1st

Second collision

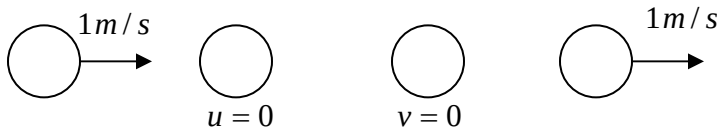

Third collision

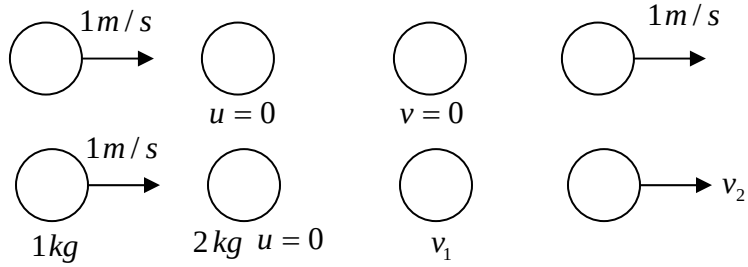

Fourth collision

$1\times 1+2\times = v_1+2v_2 \Rightarrow v_1+2v_2=1$ and $1=\dfrac{v_2-v_1}{1-0} \Rightarrow v_2-v_1=1$

so $v_2=\dfrac{2}{3}m/s,\ v_1=-\dfrac{2}{3}m/s$

First collision

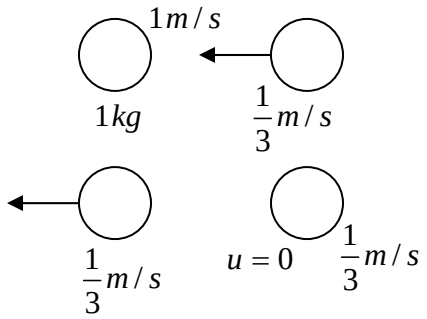

Second collision

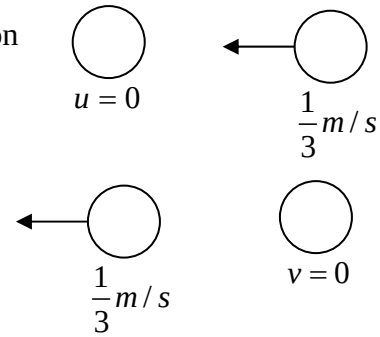

Third collision

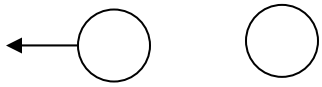

Final velocity

$\left[-\dfrac{1}{3},0,0,0,\dfrac{2}{3}\right]$. So the correct option is (b).

---

16. Conservation of Energy

Q1. A jet of gas consists of molecules of mass m, speed v and number density n all moving co-linearly. This jet hits a wall at an angle θ to the normal. The pressure exerted on the wall by the jet assuming elastic collision will be

(a) $p = 2mnv^2 \cos^2\theta$ (b) $p = 2mnv^2 \cos\theta$

(c) $p = \sqrt{(3/2)}mnv\cos^2\theta$ (d) $p = mnv^2$

JEST-2012

Q2. A chain of mass M and length L is suspended vertically with its lower end touching a weighing scale. The chain is released and falls freely onto the scale. Neglecting the size of the individual links, what is the reading of the scale when a length x of the chain has fallen?

(a) $\frac{Mgx}{L}$ (b) $\frac{2Mgx}{L}$ (c) $\frac{3Mgx}{L}$ (d) $\frac{4Mgx}{L}$

JEST-2015

Q3. A spring of force constant k is stretched by x. It takes twice as much work to stretch a second spring by $\frac{x}{2}$. The force constant of the second spring is,

(a) k (b) $2k$ (c) $4k$ (d) $8k$

JEST-2015

Q4. A ball of mass m starting front rest, fails a vertical distance h before striking a vertical spring, which it compresses by a length δ. What is the spring constant of the spring? (Hint: Measure all the vertical distances from the point where the ball first touches the uncompressed spring, i.e., set this point as the origin of the vertical axis.)

(a) $\frac{2mg}{\delta^2}(h+\delta)$ (b) $\frac{2mg}{\delta^3}(h-\delta)$ (c) $\frac{2mg}{\delta^2}(h-\delta)$ (d) $\frac{2mg}{\delta^2}h$

JEST-2018

---

16. Conservation of Energy (Solution)

Ans. 1: (a)

Solution: Change in momentum along y - direction will be cancelled out

$\because$ Change in momentum along $x-$direction, $\Delta p = 2mv\cos\theta$

$$\text{Pressure} = \frac{\text{Force}}{\text{Area}} = \frac{\frac{\Delta p}{\Delta t}}{A} = \frac{\Delta p}{A.\Delta t} = \frac{\Delta p}{A\cdot\frac{L}{v\cos\theta}} = \frac{\Delta p v\cos\theta}{A.L}$$

$$\text{Pressure} \quad p' = \frac{2mv\cos\theta\cdot v\cos\theta N}{V}, \ \because\left(n = \frac{N}{V}\right), \left(V = \text{Area}\times L = A\times L\right),$$

$$p' = 2mnv^2\cos^2\theta$$

Ans. 2: (c)

Solution: Reading of scale = impulse + actual weight $= \frac{dp}{dt} + \frac{Mgx}{L} = \frac{d\left(\Delta mv\right)}{dt} + \frac{Mgx}{L}$

$$\Rightarrow \frac{M}{L}\left(\frac{dx}{dt}\right)v + \frac{Mgx}{L} = \frac{Mv^2}{L} + \frac{Mgx}{L} = \frac{2Mgx}{L} + \frac{Mgx}{L} = \frac{3Mgx}{L} \quad \because v^2 = 2gx \text{ and } \Delta m = \frac{M}{L}dx$$

Ans. 3: (d)

Solution: The relation between energy and maximum displacement is $E = \frac{1}{2}k_1A^2$

For $A = x$; $E_1 = \frac{1}{2}k_1x^2$ and for $A = \frac{x}{2}$; $E_1 = \frac{1}{2}k_2\left(\frac{x}{2}\right)^2 = \frac{1}{8}k_2x^2$

$$\because E_2 = 2E_1 \ \therefore \frac{1}{8}k_2x^2 = 2\times\frac{1}{2}k_1x^2 \Rightarrow k_2 = 8k_1 \Rightarrow k_2 = 8k$$

Ans. 4: (a)

Solution: $mg\left(h+\delta\right) = \frac{1}{2}k\delta^2 \Rightarrow k = \frac{2mg\left(h+\delta\right)}{\delta^2}$

---

17. Fluid Mechanics

Q1. Water is poured at a rate of $R\,m^3/hour$ from the top into a cylindrical vessel of diameter D. The vessel has a small opening of area $a\left(\sqrt{a} << D\right)$ at the bottom. What should be the minimum height of the vessel so that water does not overflow?

(a) ∞ (b) $\frac{R^2}{2ga^2}$ (c) $\frac{R^2}{2gaD^2}$ (d) $\frac{8R^2}{\pi D^2 g^2}$

JEST-2017

---

17. Fluid Mechanics (Solution)

Ans. 1: (b)

Solution: The rate at which liquid coming out of the hole of area 'a' when vessel of height H is filled

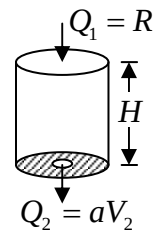

$Q_2 = aV_2$, when $V_2 = \sqrt{2gh}$

The rate at which liquid poured in vessel is $Q_1 = R$

$$\therefore\ Q_1 = Q_2 \Rightarrow a\sqrt{2gH} = R \Rightarrow H = \frac{R^2}{2ga^2}$$

Thus, correct option is (b)

---

18. Pseudo Force

Q1. Two objects of unit mass are thrown up vertically with a velocity of $1ms^{-1}$ at latitudes $45^0 N$ and $45^0 S$, respectively. The angular velocity of the rotation of Earth is given to be $7.29\times10^{-5}s^{-1}$. In which direction will the objects deflect when they reach their highest point (due to Coriolis force)? Assume zero air resistance.

(a) to the east in Northern hemisphere and west in Southern Hemisphere

(b) to the west in Northern hemisphere and east in Southern Hemisphere

(c) to the east in both hemispheres

(d) to the west in both hemispheres

JEST-2019

---

18. Pseudo Force (Solution)

Ans. 1: (d)

---

19. Rotational dynamics

Q1. A small insect of mass m is sitting on the rim of a uniform circular horizontal disk of radius R and mass M. The system is rotating at a constant angular velocity ω_i about a frictionless vertical axis passing through the center of the disk. The insect started to crawl towards the center of the disk. Assume $\frac{M}{m} = 10$, and let the final angular velocity of the system, when the insect reaches the centre of the disk be ω_f. What is the value of $\frac{100\omega_f}{\omega_i}$?

JEST-2020

Q2. A cleaning machine presses a circular mop of radius $R = 30\,cm$ vertically down on a floor with a total force $F = 25N$ and rotates it with a constant angular speed about the vertical axis passing through the centre of mop. If the force is distributed uniformly over the mop and if the coefficient of friction between the mop and the floor is $\mu = 0.25$, what is the value of torque in N - cm applied by the machine on the mop?

JEST-2020

---

19. Rotational dynamics (Solution)

Ans. 1: 0120

Solution: $F_\theta = 0$, so angular momentum is constant

$$I_{in} = I_f$$

$$\left(\frac{MR^2}{2} + m\theta^2\right)\omega_i = \left(\frac{MR^2}{2}\right)\omega f$$

$$\frac{\omega_f}{\omega_i} = \frac{\frac{MR^2}{2} + mR^2}{\frac{mR^2}{2}} = 1 + \left(\frac{m}{\frac{m}{2}}\right)$$

$$\frac{\omega_f}{\omega_i} = \left(1 + \frac{2}{10}\right) = \frac{12}{10}$$

$$\left(\frac{\omega_f}{\omega_i}\right) \times 100 = \frac{12}{10} \times 100 = 120$$

Ans. 2: 0125

Solution: dN is normal force in area $rdrd\theta$

$$dN = \frac{F}{\pi R^2} rdrd\theta$$

$$\tau = r \times dF = r\mu dN = r\mu \frac{F}{\pi R^2} rdrd\theta$$

$$= \frac{F\mu}{\pi R^2}\int_0^R r^2 dr \int_0^{2\pi} d\theta = \frac{F\mu}{\pi R^2}\frac{R^3}{3} 2\pi = \frac{2F\mu R}{3}$$

$$= \frac{2 \times 25 \times 0.25 \times 0.30}{3} = 125\, N\text{-}cm$$

---

1. Coulomb's Law, Gauss Law and Electrostatic Potential

Q1. Two dielectric spheres of radius R are separated by a distance a such that $a >> R$. One of the spheres (sphere1) has a charge q and the other is neutral. If the linear dimensions of the systems are scaled up by a factor two, by what factor should be charge on the sphere 1 be changed so that the force between the two spheres remain unchanged?

(a) 2 (b) $4\sqrt{2}$ (c) 4 (d) $2\sqrt{2}$

JEST-2018

Q2. A circular loop of radius R, carries a uniform line charge density λ. The electric field, calculated at a distance z directly above the center of the loop, is maximum if z is equal to,

(a) $\frac{R}{\sqrt{3}}$ (b) $\frac{R}{\sqrt{2}}$ (c) $\frac{R}{2}$ (d) $2R$

JEST-2015

Q3. Consider two point charges q and λq located at the points, $x = a$ and $x = \mu a$, respectively. Assuming that the sum of the two charges is constant, what is the value of λ for which the magnitude of the electrostatic force is maximum?

(a) μ (b) 1 (c) $\frac{1}{\mu}$ (d) $1+\mu$

JEST-2015

Q4. A ring of radius $0.5m$ has a gap of $0.002\pi m$. If the ring carries a charge of $+1.0C$ distributed uniformly along it, then the electric field at the centre of the ring is

(a) $7.5\times10^{7}\ NC^{-1}$

(b) $7.2\times10^{7}\ NC^{-1}$

(c) $6.2\times10^{7}\ NC^{-1}$

(d) $6.5\times10^{7}\ NC^{-1}$

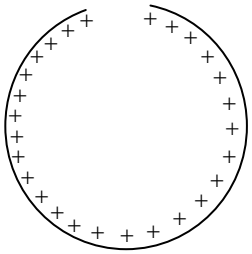

JEST-2020

Q5. An electric charge distribution produces an electric field

$$\vec{E} = \left(1 - e^{-\alpha r}\right)\frac{\vec{r}}{r^3}$$

where δ and α are constants. The net charge within a sphere of radius α^{-1} centered at the origin is

(a) $4\pi\varepsilon_0\left(1 - e^{-1}\right)$ (b) $4\pi\varepsilon_0\left(1 + e^{-1}\right)$

(c) $-4\pi\varepsilon_0 \dfrac{1}{\alpha e}$ (d) $4\pi\varepsilon_0 \dfrac{1}{\alpha e}$

JEST-2018

Q6. The charge density as a function of the radial distance r is given by

$$\rho(r) = \rho_0 \frac{R^2 - r^2}{R^2} \text{ for } r < R \text{ and zero otherwise.}$$

The electric flux over the surface of an ellipsoid with axes $3R, 4R$ and $5R$ centered at the origin is

(a) $\dfrac{4}{3\varepsilon_0}\pi\rho_0 R^3$ (b) $\dfrac{8}{9\varepsilon_0}\pi\rho_0 R^3$ (c) $\dfrac{8}{15\varepsilon_0}\pi\rho_0 R^3$ (d) zero

JEST-2018

Q7. For an electric field $\vec{E} = k\sqrt{x}\hat{x}$ where k is a non-zero constant, total charge enclosed by the cube as shown below is

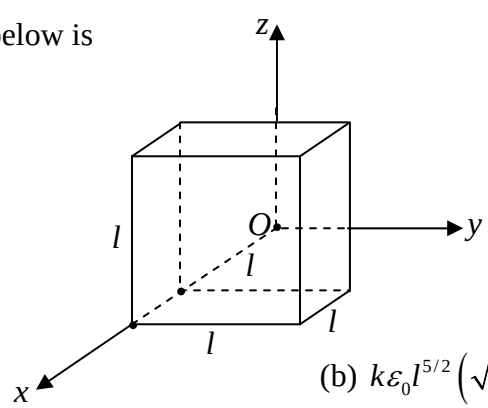

(a) 0 (b) $k\varepsilon_0 l^{5/2}\left(\sqrt{3} - 1\right)$

(c) $k\varepsilon_0 l^{5/2}\left(\sqrt{5} - 1\right)$ (d) $k\varepsilon_0 l^{5/2}\left(\sqrt{2} - 1\right)$

JEST-2017

Q8. Two large nonconducting sheets one with a fixed uniform positive charge and another with a fixed uniform negative charge are placed at a distance of 1 meter from each other. The magnitude of the surface charge densities are $\sigma_+ = 6.8\mu C/m^2$ for the positively charged sheet and $\sigma_- = 4.3\mu C/m^2$ for the negatively charged sheet. What is the electric field in the region between the sheets?

(a) $6.30\times10^5 N/C$ (b) $3.84\times10^5 N/C$

(c) $1.40\times10^5 N/C$ (d) $1.16\times10^5 N/C$

JEST-2014

Q9. An electric field in a region is given by $\vec{E}(x,y,z) = ax\hat{i} + cz\hat{j} + 6by\hat{k}$. For which values of a,b,c does this represent an electrostatic field?

(a) $13,1,12$ (b) $17,6,1$ (c) $13,1,6$ (d) $45,6,1$

JEST-2012

Q10. If $\vec{E}_1 = xy\hat{i} + 2yz\hat{j} + 3xz\hat{k}$ and $\vec{E}_2 = y^2\hat{i} + (2xy + z^2)\hat{j} + 2yz\hat{k}$ then

(a) Both are impossible electrostatic fields

(b) Both are possible electrostatic fields

(c) Only $\vec{E}_1$ is a possible electrostatic field

(d) Only $\vec{E}_2$ is a possible electrostatic field

JEST-2013

Q11. Consider two concentric spherical metal shells of radii r_1 and $r_2\,(r_2 > r_1)$. The outer shell has a charge q and the inner shell is grounded. What is the charge on the inner shell?

(a) $-\frac{r_1}{r_2}q$ (b) $\frac{r_1}{r_2}q$ (c) 0 (d) $\frac{r_2}{r_1}q$

JEST-2019

Q12. A sphere of inner radius $1cm$ and outer radius $2cm$, centered at origin has a volume charge density $\rho_0 = \frac{K}{4\pi r}$, where K is a non-zero constant and r is the radial distance. A point charge of magnitude $10^{-3}C$ is placed at the origin. For what value of K in units of C/m^2, the electric field inside shell is constant?

JEST-2017

Q13. A solid, insulating sphere of radius $1cm$ has charge $10^{-7}C$ distributed uniformly over its volume. It is surrounded concentrically by a conducting thick spherical shell of inner radius $2cm$, outer radius $2.5cm$ and is charged with $-2\times10^{-7}C$. What is the electrostatic potential in Volts on the surface of the sphere?

JEST-2017

Q14. The electrostatic potential due to a charge distribution is given by $V(r) = A\frac{e^{-\lambda r}}{r}$ where A and λ are constants The total charge enclosed within a sphere of radius $\frac{1}{\lambda}$, with its origin at $r = 0$ is given by,

(a) $\frac{8\pi\varepsilon_0 A}{e}$ (b) $\frac{4\pi\varepsilon_0 A}{e}$ (c) $\frac{\pi\varepsilon_0 A}{e}$ (d) 0

JEST-2015

Q15. A cube has a constant electric potential V on its surface. If there are no charges inside the cube, the potential at the center of the cube is

(a) V (b) $\frac{V}{8}$ (c) 0 (d) $\frac{V}{6}$

JEST-2012

(Solution)

1. Coulomb's Law, Gauss Law and Electrostatic Potential

Ans. 1: (c)

Solution: $F = \frac{kq \times q_1}{a^2} = k\frac{q' \times q_1}{(2a)^2} \Rightarrow q' = 4q$

Ans. 2: (b)

Solution: $E = \frac{1}{4\pi\varepsilon_0}\frac{(\lambda \times 2\pi R)z}{(R^2+z^2)^{3/2}}$

For maximum E, $\frac{dE}{dz} = 0 \Rightarrow \frac{\lambda \times 2\pi R}{4\pi\varepsilon_0}\left[\frac{(R^2+z^2)^{3/2} - z \times 3/2\sqrt{R^2+z^2} \times 2z}{(R^2+z^2)^3}\right] = 0$

$\Rightarrow (R^2+z^2)^{3/2} = 3z^2\sqrt{R^2+z^2} \Rightarrow R^2+z^2 = 3z^2 \Rightarrow R^2 = 2z^2 \Rightarrow z = \frac{R}{\sqrt{2}}$

Ans. 3: (b)

Solution: $F = \frac{1}{4\pi\varepsilon_0}\frac{(\lambda q \times q)}{(\mu a - a)^2} = \frac{1}{4\pi\varepsilon_0}\frac{\lambda q^2}{a^2(\mu-1)^2} = \frac{1}{4\pi\varepsilon_0 a^2(\mu-1)^2}\frac{\lambda c^2}{(1+\lambda)^2} \quad \because q + \lambda q = c$

For maximum F, $\frac{dF}{dz} = 0 \Rightarrow \frac{1}{4\pi\varepsilon_0 a^2(\mu-1)^2}\left[\frac{(1+\lambda)^2 c^2 - \lambda c^2 \times 2(1+\lambda)}{(1+\lambda)^4}\right] = 0$

$\Rightarrow (1+\lambda)^2 c^2 = \lambda c^2 \times 2(1+\lambda) \Rightarrow 1+\lambda = 2\lambda \Rightarrow \lambda = 1$

Ans. 4: (b)

Solution: The electric field at the centre is due to missing segment.

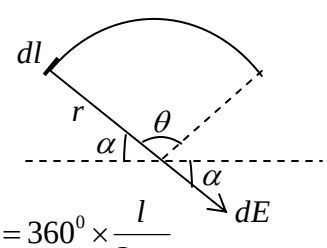

Charge per unit length $\lambda = \frac{1C}{\pi - 0.002\pi} = \frac{1}{0.998\pi} C/m$

$\because \frac{\text{Arc Length}}{\text{Circumference}} = \frac{\text{Centre Angle}}{360^0} \Rightarrow \frac{l}{2\pi r} = \frac{\theta}{360^0} \Rightarrow \frac{l}{2\pi r} = \frac{\theta}{360^0} \Rightarrow \theta = 360^0 \times \frac{l}{2\pi r}$

$\Rightarrow \theta = 360^0 \times \frac{0.002\pi}{2\pi \times 0.5} = 0.72^0$

$\because \alpha + \theta + \alpha = 180^0 \Rightarrow \alpha = \frac{180^0 - \theta}{2} = \frac{180^0 - 0.72^0}{2} = 89.64^0 \Rightarrow \alpha = 89.64^0$

and $\alpha + \theta = 90.36^0$.

Electric field due to elemental length dl at center is $dE = \frac{1}{4\pi\varepsilon_0}\frac{\lambda dl}{r^2}$.

Consider all elemental length on the arc, then at the centre horizontal component $(dE\cos\alpha)$ will

cancel out and the vertical component $(dE\sin\alpha)$ will add up.

Thus resultant field $E = \int dE\sin\alpha = \frac{\lambda}{4\pi\varepsilon_0}\int_{\alpha}^{\alpha+\theta}\sin\alpha\frac{rd\alpha}{r^2}$ $\qquad \because dl = rd\alpha$

$$\Rightarrow E = \frac{\lambda}{4\pi\varepsilon_0 r}\left[-\cos(\alpha+\theta)+\cos\alpha\right] \Rightarrow E = \frac{1}{0.998\pi}\times\frac{9\times10^9}{0.5}\left[-\cos(90.36)+\cos(89.64)\right]$$

$$\Rightarrow E = \frac{1}{0.998\pi}\times\frac{9\times10^9}{0.5}\left[0.0063+0.0063\right]$$

$$\Rightarrow E = \frac{0.1134}{1.566}\times10^9 = \frac{11.34}{1.566}\times10^7 = 7.2\times10^7\ V/m$$

Ans. 5: (a)

Solution: $Q_{enc} = \varepsilon_0\oint\vec{E}.d\vec{a} = \varepsilon_0\int_0^{\pi}\int_0^{2\pi}\left(1-e^{-\alpha r}\right)\frac{\hat{r}}{r^2}.\left(r^2\sin\theta d\theta d\phi\hat{r}\right) = \varepsilon_0\left(1-e^{-\alpha\times\frac{1}{\alpha}}\right)4\pi$

$$\Rightarrow Q_{enc} = 4\pi\varepsilon_0\left(1-e^{-1}\right)$$

Ans. 6: (c)

Solution: Electric flux $\oint\vec{E}.d\vec{a} = \frac{Q_{enc}}{\varepsilon_0} = \frac{1}{\varepsilon_0}\int_0^R\int_0^{\pi}\int_0^{2\pi}\rho_0\left(\frac{R^2-r^2}{R^2}\right)\left(r^2\sin\theta drd\theta d\phi\right) = \frac{8}{15\varepsilon_0}\pi\rho_0R^3$

Ans. 7: (d)

Solution: $Q_{enc} = \varepsilon_0\oint\vec{E}.d\vec{a}$

At $x = 2l;\ Q_{enc} = \varepsilon_0\left(k\sqrt{2l}\hat{x}\right).\left(l^2\hat{x}\right) = k\varepsilon_0 l^{5/2}\sqrt{2}$

At $x = l;\ Q_{enc} = \varepsilon_0\left(k\sqrt{l}\hat{x}\right).\left(-l^2\hat{x}\right) = -k\varepsilon_0 l^{5/2}$

At all other surface it will be zero. So, $Q_T = k\varepsilon_0 l^{5/2}\sqrt{2} - k\varepsilon_0 l^{5/2} = k\varepsilon_0 l^{5/2}\left(\sqrt{2}-1\right)$

Ans. 8: (a)

Solution: Electric field between the sheet is $=\frac{\sigma_+}{2\varepsilon_0}+\frac{\sigma_-}{2\varepsilon_0}=\frac{6.8\times10^{-6}}{2\varepsilon_0}+\frac{4.3\times10^{-6}}{2\varepsilon_0}$

$$\Rightarrow \frac{11.2\times10^{-6}}{2\times8.86\times10^{-12}}=0.626\times10^{6}\Rightarrow 6.3\times10^{5}\ N/C$$

Ans. 9: (c)

Solution: For electrostatic field $\vec{\nabla}\times\vec{E}=0$

$$\vec{\nabla}\times\vec{E}=\begin{bmatrix}\hat{i} & \hat{j} & \hat{k}\\ \frac{\partial}{\partial x} & \frac{\partial}{\partial y} & \frac{\partial}{\partial z}\\ ax & cz & 6by\end{bmatrix}=0\Rightarrow\vec{\nabla}\times\vec{E}=(6b-c)\hat{i}+\hat{j}[0-0]+\hat{k}[0]=0$$

$$\Rightarrow(6b-c)\hat{i}=0\Rightarrow c=6b$$

Ans. 10: (d)

Solution: For electrostatic field $\vec{\nabla}\times\vec{E}=0$

$$\vec{\nabla}\times\vec{E}_1=\begin{vmatrix}\hat{i} & \hat{j} & \hat{k}\\ \frac{\partial}{\partial x} & \frac{\partial}{\partial y} & \frac{\partial}{\partial z}\\ xy & 2yz & 3xz\end{vmatrix}=(0-2y)\hat{i}+0+x\hat{j}\neq0$$

$$\vec{\nabla}\times\vec{E}_2=\begin{vmatrix}\hat{i} & \hat{j} & \hat{k}\\ \frac{\partial}{\partial x} & \frac{\partial}{\partial y} & \frac{\partial}{\partial z}\\ y^2 & 2xy+z^2 & 2yz\end{vmatrix}=(2z-2z)\hat{i}+0+(2y-2y)\hat{z}=0$$

Ans. 11: (a)

Solution: Potential at the centre is $V=\frac{1}{4\pi\varepsilon_0}\left(\frac{q_1}{r_1}+\frac{q}{r_2}\right)=0\Rightarrow q_1=-\frac{r_1}{r_2}q$

Ans. 12: 20

Solution: Electric field inside the sphere as a function of r is,

$$|E|\times4\pi r^2=\frac{1}{\varepsilon_0}\left[10^{-3}+\int_{10^{-2}}^{r}\frac{K}{4\pi r}4\pi r^2dr\right]$$

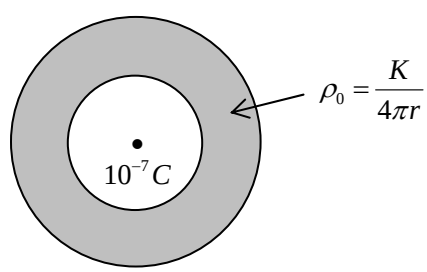

$$|E| = \frac{1}{4\pi r^2 \varepsilon_0}\left[10^{-3} + \frac{K}{2}\left(r^2 - 10^{-4}\right)\right]$$

Lets equate, $|E|_{r=1.5\times10^{-2}} = |E|_{r=2\times10^{-2}}$

$$\Rightarrow \frac{1}{4\pi \times 2.25\times10^{-4}\varepsilon_0}\left[10^{-3} + \frac{K}{2}\left(2.25\times10^{-4} - 10^{-4}\right)\right]$$

$$= \frac{1}{4\pi \times 4\times10^{-4}\varepsilon_0}\left[10^{-3} + \frac{K}{2}\left(4\times10^{-4} - 10^{-4}\right)\right]$$

$$\Rightarrow \frac{1}{2.25}\left[10^{-3} + \frac{K}{2}\left(1.25\times10^{-4}\right)\right] = \frac{1}{4}\left[10^{-3} + \frac{K}{2}\left(3\times10^{-4}\right)\right] \Rightarrow K = 20$$

Ans. 13: 9000

Solution: $V = \frac{1}{4\pi\varepsilon_0}\left[\frac{q_1}{R_1} + \frac{q_2}{R_2} + \frac{q_3}{R_3}\right]$

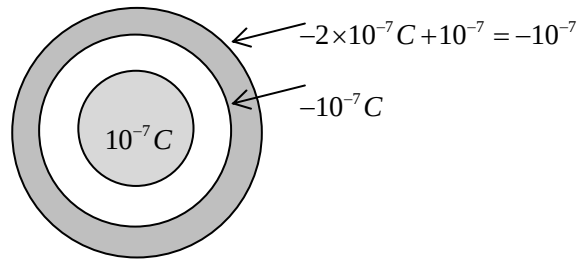

$$\Rightarrow V = 9\times10^9\left[\frac{10^{-7}}{1\times10^{-2}} + \frac{\left(-10^{-7}\right)}{2\times10^{-2}} + \frac{\left(-10^{-7}\right)}{2.5\times10^{-2}}\right]$$

$$\Rightarrow V = 9\times10^9\times10^{-5}\left[1 - \frac{1}{2} - \frac{1}{2.5}\right] = 9\times10^4\times0.1 = 9000\,Volts$$

Ans. 14: (a)

Solution: $\because V(r) = A\frac{e^{-\lambda r}}{r}$

$$\vec{E} = -\vec{\nabla}V = -A\left[\frac{re^{-\lambda r}\times(-\lambda) - e^{-\lambda r}}{r^2}\right]\hat{r} = \frac{Ae^{-\lambda r}}{r^2}(1+\lambda r)\hat{r}$$

$$Q_{enc} = \varepsilon_0\oint \vec{E}.d\vec{a} = \varepsilon_0\int_0^{\pi}\int_0^{2\pi}\frac{Ae^{-\lambda r}}{r^2}(1+\lambda r)\hat{r}.r^2\sin\theta d\theta d\phi\hat{r} = 4\pi\varepsilon_0 Ae^{-\lambda r}(1+\lambda r)$$

Thus total charge enclosed within a sphere of radius $r = \frac{1}{\lambda}$ is

$$Q_{enc} = 4\pi\varepsilon_0 Ae^{-\lambda\frac{1}{\lambda}}\left(1+\lambda\frac{1}{\lambda}\right) = \frac{8\pi\varepsilon_0 A}{e}$$

Ans. 15: (a)

---

2. Electrostatic Energy, Conductors and Electric Dipole

Q1. The electric fields outside $(r > R)$ and inside $(r < R)$ a solid sphere with a uniform volume charge density are given by $\vec{E}_{r>R} = \frac{1}{4\pi\varepsilon_0}\frac{q}{r^2}\hat{r}$ and $\vec{E}_{r<R} = \frac{1}{4\pi\varepsilon_0}\frac{q}{R^3}r\hat{r}$ respectively, while the electric field outside a spherical shell with a uniform surface charge density is given by $\vec{E}_{r>R} = \frac{1}{4\pi\varepsilon_0}\frac{q}{r^2}\hat{r}$, q being the total charge. The correct ratio of the electrostatic energies for the second case to the first case is

(a) $1:3$ (b) $9:16$ (c) $3:8$ (d) $5:6$

JEST-2013

Q2. A conducting sphere of radius r has charge Q on its surface. If the charge on the sphere is doubled and its radius is halved, the energy associated with the electric field will

(a) increase four times (b) increase eight times

(c) remain the same (d) decrease four times

JEST-2014

(Solution)

2. Electrostatic Energy, Conductors and Electric Dipole

Ans. 1: (d)

Solution: Electrostatic energy in spherical shell $W_{shell} = \frac{\varepsilon_0}{2}\int_0^R \left|\vec{E}_1\right|^2 4\pi r^2 dr + \frac{\varepsilon_0}{2}\int_R^\infty \left|\vec{E}_2\right|^2 4\pi r^2 dr$

$$\Rightarrow W_{shell} = \frac{\varepsilon_0}{2}\int_R^\infty \frac{q^2}{\left(4\pi\varepsilon_0\right)^2 r^4} 4\pi r^2 dr + 0 = \frac{q^2}{8\pi\varepsilon_0}\left(-\frac{1}{r}\right)_R^\infty = \frac{q^2}{8\pi\varepsilon_0}\frac{1}{R}$$

Electrostatic energy in solid sphere $W_{solid} = \frac{\varepsilon_0}{2}\int_0^R \left|E_1\right|^2 4\pi r^2 dr + \frac{\varepsilon_0}{2}\int_R^\infty \left|E_2\right|^2 4\pi r^2 dr$

$$\Rightarrow W_{solid} = \frac{q^2}{8\pi\varepsilon_0}\times\frac{1}{R^6}\left[\frac{r^5}{5}\right]_0^R + \frac{q^2}{8\pi\varepsilon_0}\left[-\frac{1}{r}\right]_R^\infty$$

$$\Rightarrow W_{solid} = \frac{q^2}{5\times 8\pi\varepsilon_0}\cdot\frac{1}{R} + \frac{q^2}{8\pi\varepsilon_0 R} = \frac{6q^2}{40\pi\varepsilon_0 R} = \frac{3q^2}{20\pi\varepsilon_0 R}$$

Now $\frac{W_{shell}}{W_{solid}} = \frac{\frac{q^2}{8\pi\varepsilon_0}}{\frac{3q^2}{20\pi\varepsilon_0 R}} = \frac{5}{6}$

Ans. 2: (b)

Solution: Electrostatic energy of a conducting sphere of radius R

$$W = \frac{\varepsilon_0}{2}\int_0^R \left|\vec{E}_1\right|^2 4\pi r^2 dr + \frac{\varepsilon_0}{2}\int_R^\infty \left|\vec{E}_2\right|^2 4\pi r^2 dr$$

$$\Rightarrow W = \frac{\varepsilon_0}{2}\int_R^\infty \frac{Q^2}{\left(4\pi\varepsilon_0\right)^2 r^4} 4\pi r^2 dr + 0 = \frac{q^2}{8\pi\varepsilon_0}\left(-\frac{1}{r}\right)_R^\infty = \frac{Q^2}{8\pi\varepsilon_0}\frac{1}{R}$$

$$\Rightarrow W' = \frac{\left(2Q\right)^2}{8\pi\varepsilon_0\left(\frac{R}{2}\right)} = 8\frac{Q^2}{8\pi\varepsilon_0 R} = 8W$$

---

3. Polarisation and Boundary Condition

Q1. A charge q is placed at the centre of an otherwise neutral dielectric sphere of radius a and relative permittivity ε_r. We denote the expression $q/4\pi\varepsilon_0 r^2$ by $E(r)$. Which of the following statements is false?

(a) The electric field inside the sphere, $r < a$, is given by $E(r)/\varepsilon_r$

(b) The field outside the sphere, $r > a$, is given by $E(r)$

(c) The total charge inside a sphere of radius $r > a$ is given by q.

(d) The total charge inside a sphere of radius $r < a$ is given by q.

JEST-2013

Q2. A spherical shell of inner and outer radii a and b, respectively, is made of a dielectric material with frozen polarization $\vec{P}(r) = \frac{k}{r}\hat{r}$,where k is a constant and r is the distance from the its centre. The electric field in the region $a < r < b$ is,

(a) $\vec{E} = \frac{k}{\varepsilon_0 r}\hat{r}$ (b) $\vec{E} = -\frac{k}{\varepsilon_0 r}\hat{r}$ (c) $\vec{E} = 0$ (d) $\vec{E} = \frac{k}{\varepsilon_0 r^2}\hat{r}$

JEST-2015

Q3. Suppose yz plane forms the boundary between two linear dielectric media I and II with dielectric constant $\varepsilon_I = 3$ and $\varepsilon_{II} = 4$, respectively. If the electric field in region I at the interface is given by $\vec{E}_I = 4\hat{x} + 3\hat{y} + 5\hat{z}$, then the electric field $\vec{E}_{II}$ at the interface in region II is:

(a) $4\hat{x} + 3\hat{y} + 5\hat{z}$ (b) $4\hat{x} + 0.75\hat{y} - 1.25\hat{z}$

(c) $-3\hat{x} + 3\hat{y} + 5\hat{z}$ (d) $3\hat{x} + 3\hat{y} + 5\hat{z}$

JEST-2016

(Solution)

3. Polarisation and Boundary Condition

Ans. 1: (d)

Ans. 2: (b)

Solution: $\rho_b = -\vec{\nabla}.\vec{P} = -\frac{1}{r^2}\frac{\partial}{\partial r}\left(r^2\frac{k}{r}\right) = \frac{-k}{r^2}$ and $\sigma_b = \vec{P}.\hat{n} = \begin{cases} \vec{P}.(+\hat{r}) = \frac{k}{b} & (\text{at } r = b) \\ \vec{P}.(-\hat{r}) = \frac{-k}{a} & (\text{at } r = a) \end{cases}$

For $a < r < b$; $Q_{enc} = \left(\frac{-k}{a}\right)\times 4\pi a^2 + \int_a^r \left(\frac{-k}{r^2}\right) 4\pi r^2 dr = -4\pi ka - 4\pi k(r-a) = -4\pi kr$

$$\vec{E} = \frac{1}{4\pi\varepsilon_0}\frac{Q_{enc}}{r^2} \Rightarrow \vec{E} = \frac{-k}{\varepsilon_0 r}\hat{r}$$

Ans. 3: (d)

Solution: $\because E^{\parallel}_{I} = E^{\parallel}_{II} \Rightarrow E^{\parallel}_{II} = 3\hat{y} + 5\hat{z}$ and $\frac{E^{\perp}_{II}}{E^{\perp}_{I}} = \frac{\varepsilon_I}{\varepsilon_{II}} \Rightarrow E^{\perp}_{II} = \frac{\varepsilon_I}{\varepsilon_{II}} E^{\perp}_{I} = \frac{3}{4}\cdot 4\hat{x} = 3\hat{x}$

$$\Rightarrow \vec{E}_{II} = 3\hat{x} + 3\hat{y} + 5\hat{z}$$

---

4. Multipole Expansion and Image Problem

Q1. Charges are placed as follows: q at $(a,a,0)$ and $(-a,-a,0)$ and $-q$ at $(a,-a,0)$ and $(-a,a,0)$. At large distances, how does the electrostatic potential behave as a function of the distance r from the centre $(0,0,0)$?

(a) $1/r^3$ (b) $1/r^2$ (c) $1/r$ (d) $1/r^4$

JEST-2020

Q2. Two equal positive charges of magnitude $+q$ separated by a distance d are surrounded by a uniformly charged thin spherical shell of radius $2d$ bearing a total charge $-2q$ and centred at the midpoint between the two positive charges. The net electric field at distance r from the midpoint $(>> d)$ is

(a) zero (b) proportional to d

(c) proportional to $1/r^3$ (d) proportional to $1/r^4$

JEST-2017

Q3. Consider a grounded conducting plane which is infinitely extended perpendicular to the y-axis at $y=0$. If an infinite line of charge per unit length λ runs parallel to x-axis at $y=d$, then surface charge density on the conducting plane is

(a) $\dfrac{-\lambda d}{\left(d^2+z^2\right)}$ (b) $\dfrac{-\lambda d}{\left(d^2+z^2\right)}$

(c) $\dfrac{-\lambda d}{\pi\left(d^2+z^2\right)}$ (d) $\dfrac{-\lambda d}{2\pi\left(d^2+z^2\right)}$

JEST-2017

Q4. A point charge $+q$ is placed at $(0,0,d)$ above a grounded infinite conducting plane defined by $z=0$. There are no charges present anywhere else. What is the magnitude of electric field at $(0,0,-d)$?

(a) $q/\left(8\pi\varepsilon_0 d^2\right)$ (b) $-\infty$ (c) 0 (d) $q/\left(16\pi\varepsilon_0 d^2\right)$

JEST-2012

Q5. A point charge q of mass m is released from rest at a distance d from an infinite grounded conducting plane (ignore gravity). How long does it take for the charge to hit the plane?

(a) $\frac{\sqrt{2\pi^3\varepsilon_0 md^3}}{q}$

(b) $\frac{\sqrt{2\pi^3\varepsilon_0 md}}{q}$

(c) $\frac{\sqrt{\pi^3\varepsilon_0 md^3}}{q}$

(d) $\frac{\sqrt{\pi^3\varepsilon_0 md}}{q}$

JEST-2016

---

4. Multipole Expansion and Image Problem (Solution)

Ans. 1: (a)

Solution:

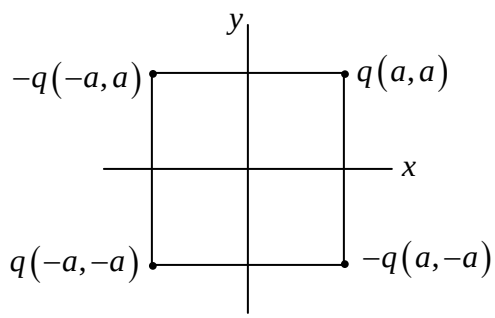

According to multipole expansion $Q_{mono} = q - q + q - q = 0$

$$\vec{p} = q(a\hat{x} + a\hat{y}) - q(-a\hat{x} + a\hat{y}) + q(-a\hat{x} - a\hat{y}) - q(a\hat{x} - a\hat{y}) = 0$$

Thus $V \propto \dfrac{1}{r^3}$

Ans. 2: (d)

Solution: $Q_{mono} = q + q - 2q = 0$

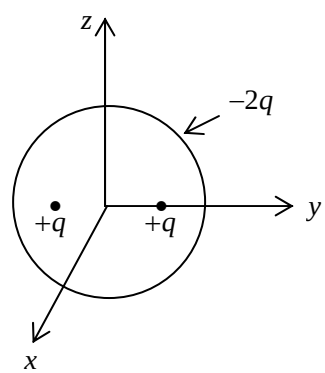

Since, the surface is symmetrical, so the net contribution by the $-2q$ charge in dipole moment vanishes, so

$$\vec{p} = qd\hat{y} + q(-d\hat{y}) - 0 = 0$$

$$\Rightarrow V \propto \frac{1}{r^3} \text{ and } E \propto \frac{1}{r^4}$$

Ans. 3: (c)

Solution: Lets say the wire runs parallel to *x*- axis and directly above it, and the conducting plane is the *x*-*z* plane.

Potential of $+\lambda$ is $V_+ = -\dfrac{\lambda}{2\pi\varepsilon_0}\ln\left(\dfrac{r_+}{a}\right)$ and Potential of $-\lambda$ is $V_- = \dfrac{\lambda}{2\pi\varepsilon_0}\ln\left(\dfrac{r_-}{a}\right)$

Total potential $V(y,z) = \dfrac{2\lambda}{4\pi\varepsilon_0}\ln\left(\dfrac{r_-}{r_+}\right) = \dfrac{\lambda}{4\pi\varepsilon_0}\ln\left(\dfrac{r_-^2}{r_+^2}\right)$

$$V(y,z) = \frac{\lambda}{4\pi\varepsilon_0}\ln\left\{\frac{(y+d)^2 + z^2}{(y-d)^2 + z^2}\right\}$$

$\because \sigma = -\varepsilon_0 \dfrac{\partial V}{\partial n}$. Here, $\dfrac{\partial V}{\partial n} = \dfrac{\partial V}{\partial y}$, evaluated at y = 0

$$\sigma(z) = -\varepsilon_0 \frac{\lambda}{4\pi\varepsilon_0}\left\{\frac{1}{(y+d)^2+z^2}\times 2(y+d) - \frac{1}{(y-d)^2+z^2}\times 2(y-d)\right\}\Bigg|_{y=0}$$

$$\sigma(z) = \frac{-\lambda d}{\pi(z^2+d^2)}$$

Ans. 4: (d)

Solution: Electric field at $(0,0,-d)$,

$$\vec{E} = \frac{q}{4\pi\varepsilon_0 (2d)^2}(\hat{z}) = \frac{q}{16\pi\varepsilon_0 d^2}\hat{z} \qquad \Rightarrow |E| = \frac{q}{16\pi\varepsilon_0 d^2}$$

Ans. 5: (a)

Solution: $F = ma = m\dfrac{d^2x}{dt^2} = -\dfrac{1}{4\pi\varepsilon_0}\dfrac{q^2}{4d^2} \Rightarrow \dfrac{d^2x}{dt^2} = -\dfrac{A}{x^2}$ where $A = \dfrac{q^2}{16\pi m\varepsilon_0}$.

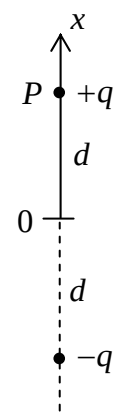

$$\Rightarrow \frac{dv}{dt} = -\frac{A}{x^2} \Rightarrow v\frac{dv}{dt} = -\frac{A}{x^2}\frac{dx}{dt} \Rightarrow \frac{1}{2}\frac{d}{dt}(v^2) = \frac{d}{dt}\left(\frac{A}{x}\right)$$

$$\Rightarrow \frac{v^2}{2} = \frac{A}{x} + C, \text{ at } x = d,\ v = 0 \Rightarrow C = -\frac{A}{d} \Rightarrow v = \sqrt{2A}\sqrt{\left(\frac{1}{x}-\frac{1}{d}\right)}.$$

$$\Rightarrow -\frac{dx}{dt} = \sqrt{2A}\sqrt{\left(\frac{1}{x}-\frac{1}{d}\right)} \Rightarrow \int_d^0 \sqrt{\frac{xd}{d-x}}dx = -\sqrt{2A}\int_0^t dt$$

Put $x = d\sin^2\theta \Rightarrow dx = x = 2d\sin\theta\cos\theta d\theta$

$$\Rightarrow \int_{\pi/2}^0 \sqrt{\frac{(d\sin^2\theta)d}{d\cos^2\theta}}2d\sin\theta\cos\theta d\theta = -\sqrt{2A}t$$

$$\Rightarrow -\sqrt{2A}t = \int_{\pi/2}^0 \sqrt{d}\,\frac{\sin\theta}{\cos\theta}2d\sin\theta\cos\theta d\theta = 2d^{3/2}\int_{\pi/2}^0 \sin^2\theta d\theta$$

$$\Rightarrow -\sqrt{2A}t = 2d^{3/2}\int_{\pi/2}^0 \frac{(1-\cos 2\theta)}{2}d\theta = d^{3/2}\left[\theta - \frac{\sin 2\theta}{2}\right]_{\pi/2}^0 = -d^{3/2}\frac{\pi}{2}$$

$$\Rightarrow -\sqrt{2A}t = -d^{3/2}\frac{\pi}{2} \Rightarrow -\sqrt{2\frac{q^2}{16\pi m\varepsilon_0}}\times t = -d^{3/2}\frac{\pi}{2}$$

$$\Rightarrow t = d^{3/2}\frac{\pi}{2}\times\sqrt{\frac{8\pi m\varepsilon_0}{q^2}} = \frac{\sqrt{2\pi^3\varepsilon_0 m d^3}}{q}$$

---

5. Motion of Charged Particle in Uniform E and B

Q1. Consider a particle of electric charge e and mass m moving under the influence of a constant horizontal electric field E and constant vertical gravitational field described by acceleration due to gravity g. If the particle starts from rest, what will be its trajectory?

(a) parabolic (b) elliptic (c) straight line (d) circular

JEST-2012

Q2. The maximum relativistic kinetic energy of β particles from a radioactive nucleus is equal to the rest mass energy of the particle. A magnetic field is applied perpendicular to the beam of β particles, which bends it to a circle of radius R. The field is given by:

(a) $\frac{3m_0c}{eR}$ (b) $\frac{\sqrt{2}m_0c}{eR}$ (c) $\frac{\sqrt{3}m_0c}{eR}$ (d) $\frac{\sqrt{3}m_0c}{2eR}$

JEST-2016

Q3. A cyclotron can accelerate deuteron to $16\,MeV$. If the cyclotron is used to accelerate α - particles, what will be their energy? Take the mass of deuteron to be twice the mass of proton and mass of alpha particles to be four times the mass of protons.

(a) $8\,MeV$ (b) $16\,MeV$ (c) $32\,MeV$ (d) $64\,MeV$

JEST-2019

Q4. A magnetic field $\vec{B} = B_0\left(\hat{i} + 2\hat{j} - 4\hat{k}\right)$ exists at point. If a test charge moving with a velocity, $\vec{v} = v_0\left(3\hat{i} - \hat{j} + 2\hat{k}\right)$ experiences no force at a certain point, the electric field at that point in SI units is

(a) $\vec{E} = -v_0B_0\left(3\hat{i} - 2\hat{j} - 4\hat{k}\right)$ (b) $\vec{E} = -v_0B_0\left(\hat{i} + \hat{j} + 7\hat{k}\right)$

(c) $\vec{E} = v_0B_0\left(14\hat{j} + 7\hat{k}\right)$ (d) $\vec{E} = -v_0B_0\left(14\hat{j} + 7\hat{k}\right)$

JEST-2012

Q5. A charged particle is released at time $t = 0$, from the origin in the presence of uniform static electric and magnetic fields given by $E = E_0\hat{y}$ and $B = B_0\hat{z}$ respectively. Which of the following statements is true for $t > 0$?

(a) The particle moves along the x-axis. (b) The particle moves in a circular orbit.

(c) The particle moves in the (x, y) plane. (d) Particle moves in the (y, z) plane

JEST-2015

Q6. A wire with uniform line charge density λ per unit length carries a current I as shown in the figure. Take the permittivity and permeability of the medium to be $\varepsilon_0 = \mu_0 = 1$. A particle of charge q is at a distance r and is travelling along a trajectory parallel to the wire. What is the speed of the charge?

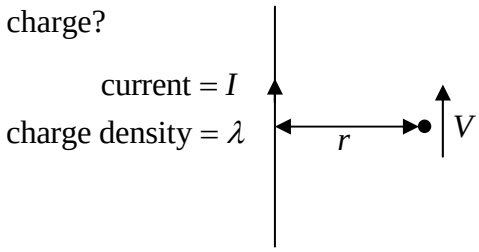

(a) $\frac{\lambda}{I}$ (b) $\frac{\lambda}{2I}$ (c) $\frac{\lambda}{3I}$ (d) $\frac{4\lambda}{I}$

JEST-2019

(Solution)

5. Motion of Charged Particle in Uniform E and B

Ans. 1: (c)

Solution: Equation of motion $qE = \frac{md^2x}{dt^2} \Rightarrow \frac{dx}{dt} = \alpha_1 t + c_1$

at $t = 0$, $v = 0 \Rightarrow c_1 = 0$, $\Rightarrow \frac{dx}{dt} = \alpha_1 t \Rightarrow x = \frac{\alpha_1 t^2}{2}$ $\left(\text{where } \alpha_1 = \frac{qE}{m}\right)$

Similarly, $mg = \frac{md^2y}{dt^2}$

$$y = \frac{\alpha_2 t^2}{2} \Rightarrow y = \frac{\alpha_2 x}{\alpha_1}, \alpha_2 = g$$

Ans. 2: (c)

Solution: $KE_{\max} = mc^2 - m_0c^2 = m_0c^2 \Rightarrow m = 2m_0$

$$\because m = \frac{m_0}{\sqrt{1-\frac{v^2}{c^2}}} \Rightarrow 2m_0 = \frac{m_0}{\sqrt{1-\frac{v^2}{c^2}}} \Rightarrow v = \frac{\sqrt{3}}{2}c$$

$$\because R = \frac{mv}{eB} \Rightarrow B = \frac{mv}{eR} = \frac{2m_0}{eR}\frac{\sqrt{3}}{2}c = \frac{\sqrt{3}m_0c}{eR}$$

Ans. 3: (c)

Solution: Energy gain in cyclotron is

$$E = \frac{q^2B^2R^2}{2m}$$

Let E_d, m_d, E_α and m_α are the energy of mass of deuteron and α - particle

$$\therefore \frac{E_d}{E_\alpha} = \frac{m_\alpha}{m_d}$$

$$\Rightarrow E_\alpha = \frac{m_d}{m_\alpha}E_d = \frac{2m_\alpha}{m_\alpha} \times 16MeV \qquad \Rightarrow E_\alpha = 32\,MeV$$

Ans. 4: (d)

Solution: $\vec{F} = q\left[\vec{E} + \vec{v} \times \vec{B}\right] = 0 \Rightarrow \vec{E} = -\left(\vec{v} \times \vec{B}\right)$

$$\Rightarrow \vec{E} = -v_0B_0\left\{(4-4)\hat{i} + (2+12)\hat{j} + (6+1)\hat{k}\right\} = -v_0B_0\left(14\hat{j} + 7\hat{k}\right)$$

Ans. 5: (c)

Solution: In a cycloid charged particle will be always confined in a plane perpendicular to B.

Ans. 6: (a)

Solution: $E = \dfrac{\lambda}{2\pi\varepsilon_0 r}$ and $B = \dfrac{\mu_0 I}{2\pi r}$

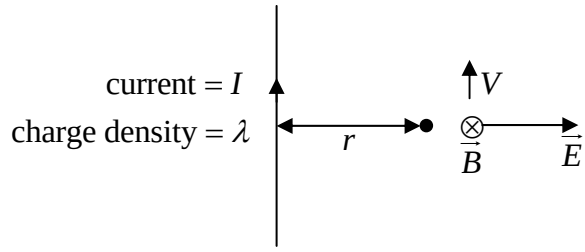

Directions are shown in the figure.

Net force on charge q is zero i.e. $\vec{F} = 0$.

$$\Rightarrow q\left[\vec{E} + \left(\vec{v} \times \vec{B}\right)\right] = 0 \Rightarrow E = vB \Rightarrow \frac{\lambda}{2\pi\varepsilon_0 r} = v\frac{\mu_0 I}{2\pi r} \Rightarrow v = \frac{\lambda}{I} \qquad \because \varepsilon_0 = \mu_0 = 1$$

---

6. Biot Savart Law, Amperes Law and Magnetic Force

Q1. A system of two circular co-axial coils carrying equal currents I along same direction having equal radius R and separated by a distance R (as shown in the figure below). The magnitude of magnetic field at the midpoint P is given by

(a) $\frac{\mu_0 I}{2\sqrt{2}R}$

(b) $\frac{4\mu_0 I}{5\sqrt{5}R}$

(c) $\frac{8\mu_0 I}{5\sqrt{5}R}$

(d) 0

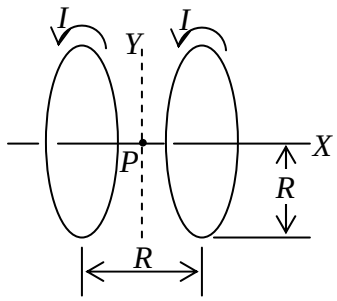

JEST-2014

Q2. Consider three infinitely long, straight and coplanar wires which are placed parallel to each other. The distance between the adjacent wires is d. Each wire carries a current I in the same direction. Consider points on either side of the middle wire where the magnetic field vanishes. What is the distance of these points from the middle wire?

(a) $\frac{2d}{3}$ (b) $\frac{2d}{\sqrt{3}}$ (c) $\frac{d}{3}$ (d) $\frac{d}{\sqrt{3}}$

JEST-2020

Q3. The strength of magnetic field at the center of a regular hexagon with sides of length a carrying a steady current I is:

(a) $\frac{\mu_0 I}{\sqrt{3}\pi a}$ (b) $\frac{\sqrt{6}\mu_0 I}{\pi a}$ (c) $\frac{3\mu_0 I}{\pi a}$ (d) $\frac{\sqrt{3}\mu_0 I}{\pi a}$

JEST-2016

(Solution)

6. Biot Savart Law, Amperes Law and Magnetic Force

Ans. 1: (c)

Solution: $\because B = \dfrac{\mu_0 I R^2}{2\left(R^2+d^2\right)^{\frac{3}{2}}} \Rightarrow B_1 = \dfrac{\mu_0 I R^2}{2\left(R^2+\frac{R^2}{4}\right)^{\frac{3}{2}}}$, $B_2 = \dfrac{\mu_0 I R^2}{2\left(R^2+\frac{R^2}{4}\right)^{\frac{3}{2}}}$ $\because d = \dfrac{R}{2}$

$$B = B_1 + B_2 = \frac{\mu_0 I \times 2}{2R\left(\frac{5}{4}\right)^{\frac{3}{2}}} \Rightarrow B = \frac{\mu_0 I 4^{\frac{3}{2}}}{R\ \ 5^{\frac{3}{2}}} = \frac{8\mu_0 I}{5\sqrt{5}R}$$

Ans. 2: (d)

Solution: Magnetic field due to wire 1 at point P is

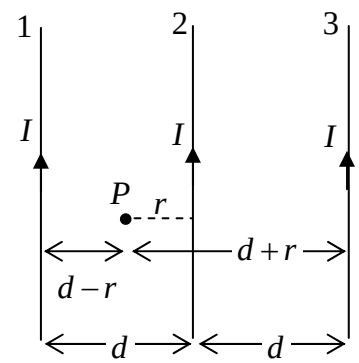

$$B_1 = \frac{\mu_0 I}{2\pi(d-r)} \text{ (pointing inward)}$$

Magnetic field due to wire 2 at point P is

$$B_2 = \frac{\mu_0 I}{2\pi r} \text{ (pointing outward)}$$

Magnetic field due to wire 3 at point P is

$$B_3 = \frac{\mu_0 I}{2\pi(d+r)} \text{ (pointing outward)}$$

Magnetic field due to wires at point P will vanish if

$$B_1 = B_2 + B_3 \Rightarrow \frac{\mu_0 I}{2\pi(d-r)} = \frac{\mu_0 I}{2\pi r} + \frac{\mu_0 I}{2\pi(d+r)}$$

$$\Rightarrow \frac{1}{(d-r)} = \frac{1}{r} + \frac{1}{(d+r)} \Rightarrow \frac{1}{d-r} = \frac{d+2r}{r(d+r)} \Rightarrow rd + r^2 = d^2 + 2rd - rd - 2r^2$$

$$\Rightarrow r^2 = d^2 - 2r^2 \Rightarrow 3r^2 = d^2 \Rightarrow r = \frac{d}{\sqrt{3}}$$

Ans. 3: (d)

Solution: $d = a\cos 30^0 = \frac{\sqrt{3}}{2}a$

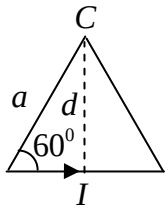

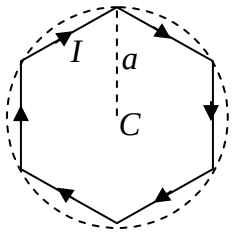

$$\because B = \frac{\mu_0 I}{4\pi d}\left(\sin\theta_2 - \sin\theta_1\right)$$

$$\Rightarrow B_1 = \frac{\mu_0 I}{4\pi d}2\sin 30^0 = \frac{\mu_0 I}{4\pi\frac{\sqrt{3}}{2}a}2\sin 30^0 = \frac{\mu_0 I}{2\sqrt{3}\pi a}$$

$$\Rightarrow B = 6B_1 = 6\times\frac{\mu_0 I}{2\sqrt{3}\pi a} = \frac{3\mu_0 I}{\sqrt{3}\pi a} = \frac{\sqrt{3}\mu_0 I}{\pi a}$$

---

7. Magnetic Vector Potential, Magnetic Dipole

Q1. A thin uniform ring carrying charge Q and mass M rotates about its axis. What is the gyromagnetic ratio (defined as ratio of magnetic dipole moment to the angular momentum) of this ring?

(a) $\frac{Q}{2\pi M}$ (b) $\frac{Q}{M}$ (c) $\frac{Q}{2M}$ (d) $\frac{Q}{\pi M}$

JEST-2013

Q2. A spherical shell of radius R carries a constant surface charge density σ and is rotating about one of its diameters with an angular velocity ω. The magnitude of the magnetic moment of the shell is:

(a) $4\pi\sigma\omega R^4$ (b) $\frac{4\pi\sigma\omega R^4}{3}$ (c) $\frac{4\pi\sigma\omega R^4}{15}$ (d) $\frac{4\pi\sigma\omega R^4}{9}$

JEST-2016

(Solution)

7. Magnetic Vector Potential, Magnetic Dipole

Ans. 1: (c)

Solution: Magnetic dipole moment $M' = IA = \frac{Q}{T}\pi r^2 \Rightarrow \frac{Q}{2\pi T}\times 2\pi \times \pi r^2 = \frac{Q\omega r^2}{2}$

Angular momentum $J = Mr^2\omega \Rightarrow \frac{M'}{J} = \frac{Q}{2M}$

Ans. 2: (b)

Solution: The total charge on the shaded ring is

$$dq = \sigma(2\pi R\sin\theta)Rd\theta$$

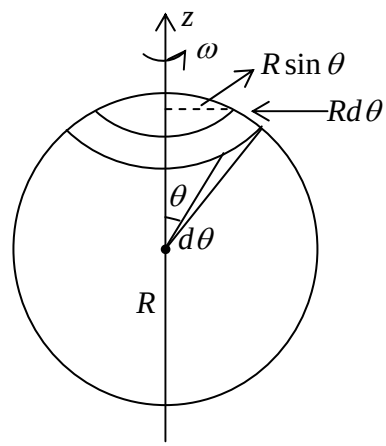

Time for one revolution is $dt = \frac{2\pi}{\omega}$

$\Rightarrow$ Current in the ring $I = \frac{dq}{dt} = \sigma\omega R^2 \sin\theta d\theta$

Area of the ring $= \pi(R\sin\theta)^2$, so the magnetic moment of the ring is

$$dm = (\sigma\omega R^2 \sin\theta d\theta)\times \pi R^2 \sin^2\theta$$

$$m = \sigma\omega R^4 \int_0^{\pi} \sin^3\theta d\theta = \frac{4}{3}\pi \times \sigma\omega R^4 \Rightarrow \vec{m} = \frac{4\pi}{3}\sigma\omega R^4 \hat{z}$$

---

9. Maxwell Equations

Q1. Two rails of a railroad track are insulated from each other and from the ground, and are connected by a millivoltmeter. What is the reading of the millivoltmeter when a train travels at the speed $90\,\text{km}/\text{hr}$ down the track? Assume that the vertical component of the earth's magnetic field is 0.2 gauss and that the tracks are separated by two meters. Use $1\text{ gauss} = 10^{-4}\text{ Tesla} = 10^{-4}\,V\cdot\sec/m^2$

(a) 10 (b) 1 (c) 0.2 (d) 180

JEST-2020

Q2. A circular conducting ring of radius R rotates with constant angular velocity ω about its diameter placed along the x-axis. A uniform magnetic field B is applied along the y-axis. If at time $t=0$ the ring is entirely in the xy-plane, the emf induced in the ring at time $t>0$ is

(a) $B\omega^2\pi R^2 t$ (b) $B\omega\pi R^2\tan(\omega t)$

(c) $B\omega\pi R^2\sin(\omega t)$ (d) $B\omega\pi R^2\cos(\omega t)$

JEST-2012

Q3. A time-dependent magnetic field $\vec{B}(t)$ is produced in a circular region of space, infinitely long and of radius R. The magnetic field is given as $\vec{B} = B_0 t\,\hat{z}$ and is zero for $r>R$, where B_0 is a positive constant. The electric field at point $r=2R$ is

(a) $\frac{B_0R}{2}\hat{r}$ (b) $-\frac{B_0R}{4}\hat{\theta}$ (c) $-\frac{B_0R}{2}\hat{r}$ (d) $\frac{B_0R}{4}\hat{\theta}$

JEST-2012

Q4. Which of the following expressions represents an electric field due to a time varying magnetic field?

(a) $K(x\hat{x}+y\hat{y}+z\hat{z})$ (b) $K(x\hat{x}+y\hat{y}-z\hat{z})$

(c) $K(x\hat{x}-y\hat{y})$ (d) $K(y\hat{y}-x\hat{y}+2z\hat{z})$

JEST-2015

Q5. Two parallel rails of a railroad track are insulated from each other and from the ground. The distance between the rails is 1 meter. A voltmeter is electrically connected between the rails. Assume the vertical component of the earth's magnetic field to the 0.2 gauss. What is the voltage developed between the rails when a train travels at a speed of 180 km/h along the track? Give the answer in milli-volts.

JEST-2018

Q6. A very long solenoid (axis along z direction) of n turns per unit length carries a current which increases linearly with time, $i = Kt$. What is the magnetic field inside the solenoid at a given time t?

(a) $\vec{B} = \mu_0 nKt\,\hat{z}$ (b) $\vec{B} = \mu_0 nK\hat{z}$

(c) $\vec{B} = \mu_0 nKt\left(\hat{x}+\hat{y}\right)$ (d) $\vec{B} = \mu_0 cnKt\hat{z}$

JEST-2019

Q7. A circular metal loop of radius $a = 1m$ spins with a constant angular velocity $\omega = 20\pi$ rad/s in a magnetic field $B = 3$ Tesla, as shown in the figure. The resistance of the loop is 10 ohms. Let P be the power dissipated in one complete cycle. What is the value of $\frac{P}{\pi^4}$ in Watts?

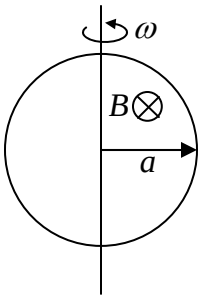

JEST-2019

Q8. Self inductance per unit length of a long solenoid of radius R with n turns per unit length is:

(a) $\mu_0 \pi R^2 n^2$ (b) $2\mu_0 \pi R^2 n$ (c) $2\mu_0 \pi R^2 n^2$ (d) $\mu_0 \pi R^2 n$

JEST-2016

Q9. A small magnet is dropped down a long vertical copper tube in a uniform gravitational field. After a long time, the magnet

(a) attains a constant velocity (b) moves with a constant acceleration

(c) moves with a constant deceleration (d) executes simple harmonic motion

JEST-2012

---

9. Maxwell Equations (Solution)

Ans. 1: (b)

Solution: Magnetic flux $\phi_m = Blx \Rightarrow$ e.m.f $\varepsilon = -\dfrac{d\phi_m}{dt} = -Blv$

$$\Rightarrow |\varepsilon| = 0.2\times10^{-4}\times 2\,m\times\frac{90\times10^3}{3600}Volts \Rightarrow |\varepsilon| = 1mV$$

Ans. 2: (d)

Solution: $\phi_m = \vec{B}\cdot\vec{A} = BA\cos(90-\theta) = BA\sin\omega t$

$$\varepsilon = -\frac{d\phi_m}{dt} = -\frac{d}{dt}\left(\vec{B}\cdot\vec{A}\right) = -\frac{d}{dt}\left[BA\sin\omega t\right] = -BA\left(\cos\omega t\right)\omega$$

$$\Rightarrow \varepsilon = -B\pi R^2\omega\cos\omega t \Rightarrow |\varepsilon| = B\omega\pi R^2\cos\omega t$$

Ans. 3: (b)

Solution: Solution: $\oint_{line}\vec{E}\cdot dl = \int\left(-\dfrac{\partial\vec{B}}{\partial t}\right)\cdot d\vec{a} \Rightarrow |E|\times 2\pi r = -B_0\pi R^2$

$$\Rightarrow |E| = -B_0\frac{R^2}{2r} \Rightarrow \vec{E} = -\frac{B_0R^2}{2r}\hat{\theta}$$

The electric field at point $r = 2R$ is $\vec{E} = -\dfrac{B_0R}{4}\hat{\theta}$

Ans. 4: (d)

Solution: For time varying fields $\vec{\nabla}\times\vec{E} \neq 0$

$$\text{(a)}\ \vec{\nabla}\times\vec{E} = K\begin{vmatrix}\hat{x} & \hat{y} & \hat{z}\\ \partial/\partial x & \partial/\partial y & \partial/\partial z\\ x & y & z\end{vmatrix} = \hat{x}\left(\frac{\partial z}{\partial y}-\frac{\partial y}{\partial z}\right)+\hat{y}\left(\frac{\partial x}{\partial z}-\frac{\partial z}{\partial x}\right)+\hat{z}\left(\frac{\partial y}{\partial x}-\frac{\partial x}{\partial y}\right) = 0$$

$$\text{(b)}\ \vec{\nabla}\times\vec{E} = K\begin{vmatrix}\hat{x} & \hat{y} & \hat{z}\\ \partial/\partial x & \partial/\partial y & \partial/\partial z\\ x & y & -z\end{vmatrix} = \hat{x}\left(-\frac{\partial z}{\partial y}-\frac{\partial y}{\partial z}\right)+\hat{y}\left(\frac{\partial x}{\partial z}+\frac{\partial z}{\partial x}\right)+\hat{z}\left(\frac{\partial y}{\partial x}-\frac{\partial x}{\partial y}\right) = 0$$

$$\text{(c)}\ \vec{\nabla}\times\vec{E} = K\begin{vmatrix}\hat{x} & \hat{y} & \hat{z}\\ \partial/\partial x & \partial/\partial y & \partial/\partial z\\ x & -y & 0\end{vmatrix} = \hat{x}\left(0+\frac{\partial y}{\partial z}\right)+\hat{y}\left(\frac{\partial x}{\partial z}-0\right)+\hat{z}\left(-\frac{\partial y}{\partial x}-\frac{\partial x}{\partial y}\right) = 0$$

(d) $\vec{\nabla}\times\vec{E}=K\begin{vmatrix}\hat{x} & \hat{y} & \hat{z}\\ \partial/\partial x & \partial/\partial y & \partial/\partial z\\ y & -x & 2z\end{vmatrix}=\hat{x}\left(\frac{\partial(2z)}{\partial y}+\frac{\partial x}{\partial z}\right)+\hat{y}\left(-\frac{\partial x}{\partial z}-\frac{\partial(2z)}{\partial x}\right)+\hat{z}\left(\frac{\partial y}{\partial x}-\frac{\partial y}{\partial y}\right)$

$=-\hat{z}\neq 0$

Ans. 5: 1.0

Solution: Induced emf $\varepsilon=Blv=\left(0.2\times10^{-4}\right)\times1m\times180\times\frac{10}{60\times60}=10^{-3}volts=1mV$

Ans. 6: (a)

Ans. 7: 18

Solution: Magnetic flux through the loop is $\phi_m=\int_S\vec{B}.d\vec{a}=B\times\pi a^2\times\cos\omega t$

Induced e.m.f $\varepsilon=-\frac{d\phi_m}{dt}=\omega B\times\pi a^2\times\sin\omega t$.

Power dissipated $p=\frac{\varepsilon^2}{R}=\frac{\omega^2B^2\pi^2a^4\sin^2\omega t}{R}$

Power dissipated in one complete cycle $P=\langle p\rangle=\frac{\omega^2B^2\pi^2a^4}{2R}$ $\qquad\because\langle\sin^2\omega t\rangle=\frac{1}{2}$

$$\frac{P}{\pi^4}=\frac{\omega^2B^2a^4}{2\pi^2R}\Rightarrow P=\frac{(20\pi)^2(3)^2(1)^4}{2(10)(10)}=18$$

Ans. 8: (a)

Solution: Magnetic flux through solenoid $\phi=BA=\left(\mu_0nI\times nl\right)\pi R^2=\left(\mu_0\pi n^2R^2l\right)I$

$$\because\phi=LI\Rightarrow L=\mu_0\pi n^2R^2l\Rightarrow\frac{L}{l}=\mu_0\pi n^2R^2$$

Ans. 9: (a)

---

10. E.M. Waves in Free Space, in dielectrics and in conductors

Q1. The magnetic field (Gaussian units) in an empty space is described by

$$\vec{B} = B_0 \exp(ax)\sin(ky - \omega t)\hat{z}$$

What is the y - component of the electric field?

(a) $-\frac{ac}{\omega} B_0 \sin(ky - \omega t)$

(b) $-\frac{ac}{\omega} B_0 \exp(ax)\cos(ky - \omega t)$

(c) $-B_0 \sin(ky - \omega t)$

(d) 0

JEST-2019

Q2. The wavelength of red helium-neon laser in air is $6328\,\mathring{A}$. What happens to its frequency in glass that has a refractive index of 1.50?

(a) Increases by a factor of 3

(b) Decreases by a factor of 1.5

(c) Remains the same

(d) Decreases by a factor of 0.5

JEST-2015

Q3. The approximate force exerted on a perfectly reflecting mirror by an incident laser beam of power $10\,mW$ at normal incidence is

(a) $10^{-13}\,N$

(b) $10^{-11}\,N$

(c) $10^{-9}\,N$

(d) $10^{-15}\,N$

JEST-2015

Q4. A laser has output power of $150\,mW$ with beam diameter of $2\,mm$ at a wavelength $630\,nm$. What is the value of the electric field in units of V/m is? Use Coulomb's constant, $\frac{1}{(4\pi \in_0)} = 9\times10^9\,Nm^2C^{-2}$

JEST-2020

Q5. The electric field $\vec{E} = E_0 \sin(\omega t - kz)\hat{x} + 2E_0 \sin\left(\omega t - kz + \frac{\pi}{2}\right)\hat{y}$ represents:

(a) a linearly polarized wave

(b) a right-hand circularly polarized wave

(c) a left-hand circularly polarized wave

(d) an elliptically polarized wave

JEST-2016

Q6. How much force does light from a $1.8\,W$ laser exert when it is totally absorbed by an object?

(a) $6.0\times10^{-9}\,N$ (b) $0.6\times10^{-9}\,N$ (c) $0.6\times10^{-8}\,N$ (d) $4.8\times10^{-9}\,N$

JEST-2016

Q7. A plane electromagnetic wave propagating in air with $\vec{E}=\left(8\hat{i}+6\hat{j}+5\hat{k}\right)e^{i(\omega t+3x-4y)}$ is incident on a perfectly conducting slab positioned at $x=0$. $\vec{E}$ field of the reflected wave is

(a) $\left(-8\hat{i}-6\hat{j}-5\hat{k}\right)e^{i(\omega t+3x+4y)}$ (b) $\left(-8\hat{i}+6\hat{j}-5\hat{k}\right)e^{i(\omega t+3x+4y)}$

(c) $\left(-8\hat{i}+6\hat{j}-5\hat{k}\right)e^{i(\omega t-3x-4y)}$ (d) $\left(-8\hat{i}-6\hat{j}-5\hat{k}\right)e^{i(\omega t-3x-4y)}$

JEST-2017

Q8. At equilibrium, there can not be any free charge inside a metal. However, if you forcibly put charge in the interior then it takes some finite time to 'disappear' i.e. move to the surface. If the conductivity σ of a metal is $10^{6}\left(\Omega m\right)^{-1}$ and the dielectric constant $\varepsilon_0=8.85\times10^{-12}$ Farad/m, this time will be approximately:

(a) 10^{-5} sec (b) 10^{-11} sec (c) 10^{-9} sec (d) 10^{-17} sec

JEST-2013

Q9. The skin depth of a metal is dependent on the conductivity (σ) of the metal and the angular frequency ω of the incident field. For a metal of high conductivity, which of the following relations is correct? (Assume that $\sigma >> \in \omega$, where $\in$ is the electrical permittivity of the medium.)

(a) $d\propto\sqrt{\dfrac{\sigma}{\omega}}$ (b) $d\propto\sqrt{\dfrac{1}{\sigma\omega}}$

(c) $d\propto\sqrt{\sigma\omega}$ (d) $d\propto\sqrt{\dfrac{\omega}{\sigma}}$

JEST-2015

Q10. An electromagnetic wave of frequency ω travels in the x- direction through vacuum. It is polarized in the y- direction and the amplitude of the electric field is E_0. With $k = \frac{\omega}{c}$ where c is the speed of light in vacuum, the electric and the magnetic fields are then conventionally given by

(a) $\vec{E} = E_0 \cos(ky - \omega t)\hat{x}$ and $\vec{B} = \frac{E_0}{c}\cos(ky - \omega t)\hat{z}$

(b) $\vec{E} = E_0 \cos(kx - \omega t)\hat{y}$ and $\vec{B} = \frac{E_0}{c}\cos(kx - \omega t)\hat{z}$

(c) $\vec{E} = E_0 \cos(kx - \omega t)\hat{z}$ and $\vec{B} = \frac{E_0}{c}\cos(ky - \omega t)\hat{y}$

(d) $\vec{E} = E_0 \cos(kx - \omega t)\hat{x}$ and $\vec{B} = \frac{E_0}{c}\cos(ky - \omega t)\hat{y}$

JEST-2013

(Solution)

10. E.M. Waves in Free Space, in dielectrics and in conductors

Ans. 1: (d)

Ans. 2: (c)

Solution: Frequency of electromagnetic wave does not change when it enter in medium of any refractive index.

Ans. 3: (b)

Solution: When electromagnetic wave is reflected by mirror the momentum transferred to the mirror per unit area per second is twice the momentum of the light striking the mirror per unit area per second

i.e. $\frac{dp}{dt} = \frac{2 \times Power}{c} = 2 \times \frac{10 \times 10^{-3}}{3 \times 10^{-8}} = 6.6 \times 10^{-11}\ kg\, m/s^2$

The force exerted on the reflecting mirror is $F = \frac{dp}{dt} = 6.6 \times 10^{-11} N$

Thus best suitable answer is option (b).

Ans. 4: 6000

Solution: $I = \frac{P}{A} = \frac{1}{2}\varepsilon_0 E_0^2 c = \frac{P}{\pi r^2} \Rightarrow E_0^2 = \frac{2P}{\pi \varepsilon_0 c r^2} \Rightarrow E_0 = \sqrt{\frac{2P}{\pi \varepsilon_0 c r^2}} = \sqrt{\frac{1}{4\pi\varepsilon_0}\frac{8P}{cr^2}}$

$$\Rightarrow E_0 = \sqrt{9 \times 10^9 \times \frac{8 \times 150 \times 10^{-3}}{3 \times 10^8 \times \left(10^{-3}\right)^2}} \Rightarrow E_0 = \sqrt{\frac{1200 \times 3 \times 10^6}{10^2}} = 6000\ V/m$$

Ans. 5: (d)

Ans. 6: (a)

Solution: Radiation Pressure $\frac{F}{A} = \frac{I}{c} = \frac{P}{Ac} \Rightarrow F = \frac{P}{c} \Rightarrow F = \frac{1.8}{3 \times 10^8} = 6.0 \times 10^{-9}\ N$

Ans. 7: (c)

Solution: For given $\vec{E} = \left(8\hat{i} + 6\hat{j} + 5\hat{k}\right)e^{i(\omega t + 3x - 4y)}$; $\hat{n} = \left(8\hat{i} + 6\hat{j} + 5\hat{k}\right)$ and $\vec{k} = 3\hat{i} - 4\hat{j}$

$$\Rightarrow \vec{k}.\hat{n} = \left(3\hat{i} - 4\hat{j}\right).\left(8\hat{i} + 6\hat{j} + 5\hat{k}\right) = 24 - 24 = 0$$

On a perfectly conducting slab wave is reflected so possible answer is (c) and (d)

(c) $\vec{E}_r = \left(-8\hat{i} + 6\hat{j} - 5\hat{k}\right)e^{i(\omega t - 3x - 4y)}$; $\hat{n} = \left(-8\hat{i} + 6\hat{j} - 5\hat{k}\right)$ and $\vec{k} = -3\hat{i} - 4\hat{j}$

$$\Rightarrow \vec{k}.\hat{n} = \left(-3\hat{i} - 4\hat{j}\right).\left(-8\hat{i} + 6\hat{j} - 5\hat{k}\right) = 24 - 24 = 0$$

(d) $\vec{E}_r = \left(-8\hat{i} - 6\hat{j} - 5\hat{k}\right)e^{i(\omega t - 3x - 4y)}$; $\hat{n} = \left(-8\hat{i} - 6\hat{j} - 5\hat{k}\right)$ and $\vec{k} = -3\hat{i} - 4\hat{j}$

$$\Rightarrow \vec{k}.\hat{n} = \left(-3\hat{i} - 4\hat{j}\right).\left(-8\hat{i} - 6\hat{j} - 5\hat{k}\right) = 24 + 24 = 48 \neq 0$$

Correct answer is (c).

Ans. 8: (d)

Solution: Characteristic time: $\tau = \frac{\in_0}{\sigma} = \frac{8.85 \times 10^{-12}}{10^6} = 8.85 \times 10^{-18}$

Ans. 9: (b)

Solution: Skin depth $d = \sqrt{\frac{2}{\sigma \mu \omega}}$

Ans. 10: (b)

Solution: $\vec{E} = E_0 \cos\left(kx - \omega t\right)\hat{y}$

$$\vec{B} = \frac{1}{c}\left(\hat{k} \times \vec{E}\right) \Rightarrow \vec{B} = \frac{1}{c}\left[\hat{x} \times E_0 \cos\left(kx - \omega t\right)\hat{y}\right]$$

$$\Rightarrow \vec{B} = \frac{E_0}{c}\cos\left(kx - \omega t\right)\left(\hat{x} \times \hat{y}\right) \Rightarrow \vec{B} = \frac{E_0}{c}\cos\left(kx - \omega t\right)\left(\hat{z}\right)$$

---

11. Reflection and Transmission at an Interface

Q1. When unpolarised light is incident on a glass plate at a particular angle, it is observed that the reflected beam is linearly polarized. What is the angle of the refracted beam with respect to the surface normal?

(a) 56.7^0

(b) 33.4^0

(c) 23.3^0

(d) The light is completely reflected and there is no refracted beam.

JEST-2012

Q2. For an optical fiber with core and cladding index of $n_1 = 1.45$ and $n_2 = 1.44$, respectively, what is the approximate cut-off angle of incidence? Cut-off angle of incidence is defined as the incidence angle below which light will be guided.

(a) 7° (b) 22° (c) 5° (d) 0°

JEST-2014

Q3. An electromagnetic wave of wavelength λ is incident normally on a dielectric slab of thickness t. If K is the dielectric constant of the slab, the change in phase of the emergent wave compared with the case of propagation in the absence of the dielectric slab is

(a) $\sqrt{K} - 1$ (b) 2π (c) $\frac{2\pi t}{\lambda}$ (d) $\frac{2\pi t}{\lambda}\left(\sqrt{K} - 1\right)$

JEST-2018

(Solution)

11. Reflection and Transmission at an Interface

Ans. 1: (b)

Solution: Since $n_1 = 1$, $n_2 = 1.52$

Brewster angle $\theta_B = \tan^{-1}\left(\frac{n_2}{n_1}\right) = \tan^{-1}\left(\frac{1.52}{1}\right) = 56.7^0$

Now $\theta_R = 180 - 90 - 56.7 = 33.4^0$

Ans. 2: (a)

Solution: $\theta = \sin^{-1}\left[1 - \left(\frac{n_2}{n_1}\right)^2\right]^{1/2}$, where $n_2 = 1.44$, $n_1 = 1.45$

$$\theta = \sin^{-1}\left(1 - \frac{1.44 \times 1.44}{1.45 \times 1.45}\right)^{1/2} \Rightarrow \theta = \sin^{-1}\left(0.11726\right)^{1/2} \Rightarrow \theta = 6.67^0 \approx 7^0$$

Ans. 3: (d)

Solution: Assume wave is propagating is positive z-direction:

In absence of the dielectric slab, phase $\phi_1 = kz - \omega t = \frac{\omega}{c} d - \omega t$ (let thickness is d)

In presence of the dielectric slab, phase $\phi_2 = kz - \omega t = \frac{\omega}{c/n} d - \omega t = \frac{\omega\sqrt{K}}{c} d - \omega t$

$\because n \approx \sqrt{K}$

Thus change is phase is $\phi_2 - \phi_1 = \frac{\omega}{c} d\left(\sqrt{K} - 1\right) = \frac{2\pi}{\lambda} d\left(\sqrt{K} - 1\right)$

---

12. Waveguide and Potential Formulation

Q1. An electromagnetic field is given by

$$\vec{E}(\vec{r},t) = -\frac{1}{4\pi \in_0}\frac{q}{r^2}\theta(vt-r)\dot{r}, \qquad \vec{B}(\vec{r},t) = 0$$

where $\theta(x) = \begin{cases} 1 & \text{for } x > 0 \\ 0 & \text{for } x \le 0 \end{cases}$

The corresponding charge density ρ and current density $\vec{J}$ are given by

(a) $\rho = -q\delta^3(\vec{r})\theta(vt-r) + \frac{q}{4\pi r^2}\theta(vt-r); \vec{J} = 0$

(b) $\rho = -q\delta^3(\vec{r})\theta(vt-r); \vec{J} = 0$

(c) $\rho = \frac{q}{4\pi r^2}\delta(vt-r); \vec{J} = \frac{qv}{4\pi r^2}\delta(vt-r)\hat{r}$

(d) $\rho = -q\delta^3(\vec{r})\theta(vt-r) + \frac{q}{4\pi r^2}\delta(vt-r); \vec{J} = \frac{qv}{4\pi r^2}\delta(vt-r)\hat{r}$

JEST-2020

Q2. Consider magnetic vector potential $\vec{A}$ and scalar potential Φ which define the magnetic field $\vec{B}$ and electric field $\vec{E}$. If one adds $-\vec{\nabla}\lambda$ to $\vec{A}$ for a well-defined λ, then what should be added to Φ so that $\vec{E}$ remains unchanged up to an arbitrary function of time, $f(t)$?

(a) $\frac{\partial\lambda}{\partial t}$ (b) $-\frac{\partial\lambda}{\partial t}$ (c) $\frac{1}{2}\frac{\partial\lambda}{\partial t}$ (d) $-\frac{1}{2}\frac{\partial\lambda}{\partial t}$

JEST-2017

(Solution)

12. Waveguide and Potential Formulation

Ans. 1: (d)

Solution: $\because \vec{\nabla}.\vec{E} = \frac{\rho}{\varepsilon_0} \Rightarrow \rho = \varepsilon_0\left(\vec{\nabla}.\vec{E}\right) \Rightarrow \rho = -\frac{q}{4\pi}\vec{\nabla}\cdot\left\{\theta\left(vt-r\right)\frac{\hat{r}}{r^2}\right\}$

$$\Rightarrow \rho = -\frac{q}{4\pi}\left[\theta\left(vt-r\right)\vec{\nabla}\cdot\left(\frac{\hat{r}}{r^2}\right)+\frac{\hat{r}}{r^2}\cdot\vec{\nabla}\left\{\theta\left(vt-r\right)\right\}\right]$$

$$\Rightarrow \rho = -q\delta^3\left(r\right)\theta\left(vt-r\right)+\frac{q}{4\pi r^2}\delta\left(vt-r\right)$$

$$\because \vec{\nabla}\cdot\left(\frac{\hat{r}}{r^2}\right) = 4\pi\delta^3\left(r\right) \text{ and } \theta\left(x\right) = \begin{cases} 1 & \text{for } x>0 \\ 0 & \text{for } x\le 0 \end{cases}$$

$$\because \vec{\nabla}\times\vec{B} = \mu_0\vec{J}+\mu_0\varepsilon_0\frac{\partial\vec{E}}{\partial t} \Rightarrow \vec{J} = -\varepsilon_0\frac{\partial\vec{E}}{\partial t} \qquad \because \vec{B}=0$$

$$\Rightarrow \vec{J} = -\varepsilon_0\frac{\partial\vec{E}}{\partial t} = -\varepsilon_0\times\frac{q}{4\pi\varepsilon_0 r^2}\frac{\partial\theta}{\partial t}\times v\hat{r} \Rightarrow \vec{J} = \frac{qv}{4\pi r^2}\delta\left(vt-r\right)\hat{r}$$

Ans. 2: (a)

Solution: Consider Gauge Transformation

$$\vec{A}' = \vec{A}-\vec{\nabla}\lambda = \vec{A}+\vec{\nabla}\left(-\lambda\right) \quad \text{and} \quad \Phi' = \Phi-\frac{\partial\left(-\lambda\right)}{\partial t} = \Phi+\frac{\partial\lambda}{\partial t}$$

---

13. Radiation from moving Charges

Q1. The electric and magnetic field caused by an accelerated charged particle are found to scale as $E \propto r^{-n}$ and $B \propto r^{-m}$ at large distances. What are the value of n and m?

(a) $n = 1,\ m = 2$ (b) $n = 2,\ m = 1$ (c) $n = 1,\ m = 1$ (d) $n = 2,\ m = 2$

JEST-2013

Q2. An electron is executing simple harmonic motion along the y-axis in right handed coordinate system. Which of the following statements is true for emitted radiation?

(a) The radiation will be most intense in xz plane

(b) The radiation will be most intense in xy plane

(c) The radiation will violate causality

(d) The electron's rest mass energy will reduce due to radiation loss

JEST-2014

---

13. Radiation from moving Charges (Solution)

Ans. 1: (c)

Solution: For large distance $F = \frac{qa\sin\theta}{r}$, $B = \frac{qa\sin\theta}{r} \Rightarrow E \propto \frac{1}{r}$, $B \propto \frac{1}{r}$

So $m = n = 1$

Ans. 2: (a)

Solution: Oscillating electron does not emit radiation in the direction of oscillation.

In the perpendicular direction of oscillation intensity is maximum.

So in this case the intensity will be maximum along x and z - axis or xz - plane (intensity is also en xy-plane but less).

---

14. Relativistic Electrodynamics

Q1. An observer in an inertial frame finds that at a point P the electric field vanishes but the magnetic field does not. This implies that in any other inertial frame the electric field $\vec{E}$ and the magnetic field $\vec{B}$ satisfy

(a) $\left|\vec{E}\right|^2 = \left|\vec{B}\right|^2$ (b) $\vec{E}\cdot\vec{B} = 0$ (c) $\vec{E}\times\vec{B} = 0$ (d) $\vec{E} = 0$

JEST-2012

---

14. Relativistic Electrodynamics (Solution)

Ans. 1: (b)

---

15. DC Analysis of R-L-C

Q1. What is the charge stored on each capacitor C_1 and C_2 in the circuit shown in the given figure?

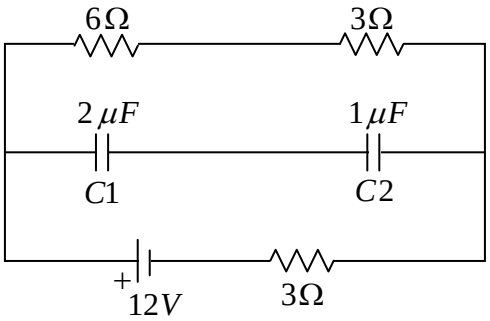

(a) $6\mu C, 6\mu C$

(b) $6\mu C, 3\mu C$

(c) $3\mu C, 6\mu C$

(d) $3\mu C, 3\mu C$

JEST-2020

Q2. A capacitor C is connected to a battery V_0 through three equal resistors R and a switch S as shown below:

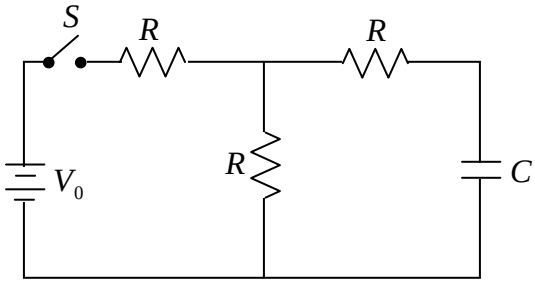

The capacitor is initially uncharged. At time $t = 0$, the switch S is closed. The voltage across the capacitor as a function of time t for $t > 0$ is given by

(a) $(V_0/2)(1-\exp(-t/2RC))$

(b) $(V_0/3)(1-\exp(-t/3RC))$

(c) $(V_0/3)(1-\exp(-3t/2RC))$

(d) $(V_0/2)(1-\exp(-2t/3RC))$

JEST-2012

Q3. Consider the following circuit in steady state condition. Calculate the amount of charge stored in $1\mu F$ and $2\mu F$ capacitors respectively.

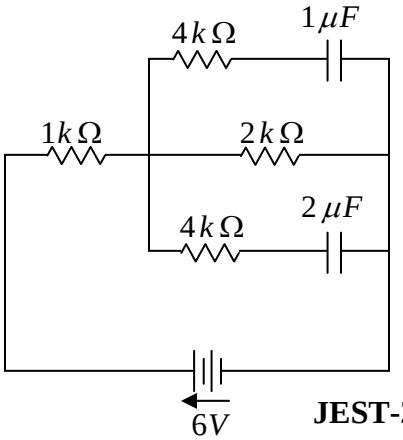

(a) $4\mu C$ and $8\mu C$

(b) $8\mu C$ and $4\mu C$

(c) $3\mu C$ and $6\mu C$

(d) $6\mu C$ and $3\mu C$

JEST-2017

Q4. For the circuit shown below, what is the ratio $\frac{I_1}{I_2}$?

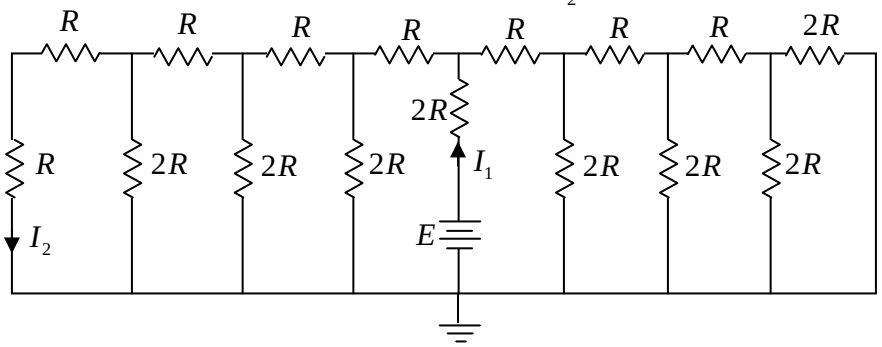

JEST-2017

Q5. A dc voltage of 80 Volt is switched on across a circuit containing a resistance of 5Ω in series with an inductance of $20H$. What is the rate of change of current at the instant when the current is $12A$?

(a) $0A/s$ (b) $1A/s$ (c) $5A/s$ (d) $80A/s$

JEST-2019

---

15. DC Analysis of R-L-C (Solution)

Ans. 1: (a)

Solution: $V_1 = \frac{q_1}{C_1}$, $V_2 = \frac{q_2}{C_2}$ and $V_1 + V_2 = 9V$.

$$\Rightarrow \frac{q_1}{C_1} + \frac{q_2}{C_2} = 9V \Rightarrow \frac{q_1}{2\mu F} + \frac{q_2}{1\mu F} = 9V$$

$\Rightarrow q_1 + 2q_2 = 18$ (Check that option (a) satisfies this condition)

Ans. 2: (d)

Solution:

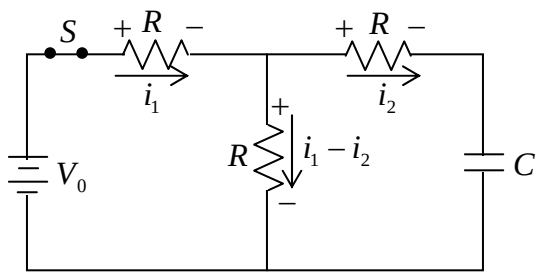

Apply KVL in loop 1: $-V_0 + i_1(t)R + (i_1 - i_2)R = 0 \Rightarrow 2i_1(t)R - i_2(t)R = V_0$ ….. (i)

Apply KVL in loop 2:

$$i_2 R + \frac{1}{C}\int_0^t i_2 dt - (i_1 - i_2)R = 0 \Rightarrow \frac{1}{C}\int_0^t i_2 dt + 2i_2 R - \left(\frac{V_0 + i_2 R}{2}\right) = 0$$

$$\Rightarrow \frac{1}{C}\int_0^t i_2 dt + \frac{3}{2} i_2 R = \frac{-V_0}{2} \quad \text{……(ii)}$$

$$\Rightarrow \frac{1}{C} i_2 + \frac{3}{2} R \frac{di_2}{dt} = 0 \quad \Rightarrow \frac{3}{2} R \frac{di_2}{dt} = -\frac{1}{C} i_2 \Rightarrow \frac{di_2}{dt} = \frac{-2}{3RC} i_2 \Rightarrow i_2(t) = Ke^{\frac{-2}{3RC}t}$$

Initial Conditions

$$i_1(0^+) = \frac{V_0}{R + \frac{R \times R}{R + R}} = \frac{V_0}{R + \frac{R}{2}} = \frac{2}{3}\frac{V_0}{R} \text{ and } i_2(0^+) = \frac{R}{R+R} \times \frac{2V_0}{3R} = \frac{V_0}{3R},\ v_C(0^+) = 0$$

$$\because i_2(0^+) = \frac{V_0}{3R} \Rightarrow K = \frac{V_0}{3R} \Rightarrow i_2(t) = \frac{V_0}{3R} e^{\frac{-2}{3RC}t}$$

$$v_C(t)=\frac{1}{C}\int_0^t i_2 dt=\frac{V_0}{3RC}\int_0^t e^{\frac{-2t}{3RC}}dt=\frac{V_0}{3RC}\left[\frac{e^{\frac{-2t}{3RC}}}{\frac{-2}{3}RC}\right]_0^t$$

$$\Rightarrow v_C(t)=\frac{V_0}{3RC}\times\frac{-3RC}{2}\left[e^{\frac{-2t}{3RC}}-1\right]\Rightarrow v_C(t)=\frac{V_0}{2}\left[1-e^{\frac{-2t}{3RC}}\right]$$

II nd Method (Using Thevenins Equivalent Circuit)

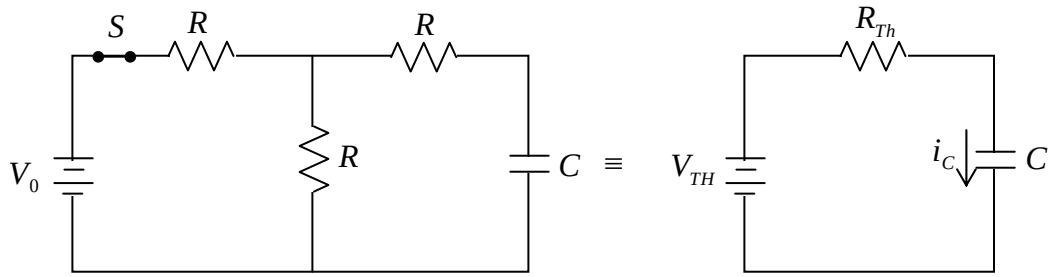

where $V_{Th}=\frac{R}{R+R}V_0=\frac{V_0}{2}$ and $R_{Th}=\frac{R\times R}{R+R}+R=\frac{3R}{2}$

$$\because v_C(t)=V_{Th}\left[1-\exp\left(-t/R_{Th}C\right)\right]$$

$$\Rightarrow v_C(t)=\left(V_0/2\right)\left[1-\exp\left(-2t/3RC\right)\right]$$

Ans. 3: (a)

Solution: For DC voltage capacitors are open circuited.

Voltage across $2k\Omega$ resistance $V_{2k\Omega}=\frac{2}{(1+2)}\times 6V=4V$

Amount of charge stored in $1\mu F$ is $Q_{1\mu F}=CV=1\mu F\times 4V=4\mu C$

Amount of charge stored in $2\mu F$ is $Q_{2\mu F}=CV=2\mu F\times 4V=8\mu C$

Ans. 4: 16

Solution:

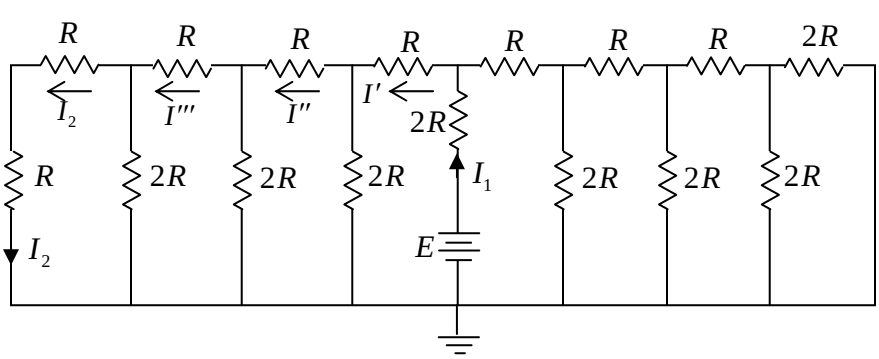

From voltage divider rule $I' = \frac{I_1}{2}$, $I'' = \frac{I'}{2} = \frac{I_1}{4}$, $I''' = \frac{I''}{2} = \frac{I_1}{8}$ and $I_2 = \frac{I'''}{2} = \frac{I_1}{16}$

$$\Rightarrow \frac{I_1}{I_2} = 16$$

Ans. 5: (b)

Solution: $i(t) = \frac{V}{R}\left(1 - e^{-\frac{R}{L}t}\right) \Rightarrow \frac{di}{dt} = \frac{V}{L}e^{-\frac{R}{L}t} \Rightarrow \frac{di}{dt} = \frac{V}{L}\left(1 - \frac{R}{V}i\right)$

$$\Rightarrow \frac{di}{dt} = \frac{80}{20}\left(1 - \frac{5}{80}\times 12\right) = \frac{80}{20}\left(\frac{20}{80}\right) = 1\,A/s$$

---

16. AC Analysis of R-L-C

Q1. Find the resonance frequency (rad/sec) of the circuit shown in the figure below

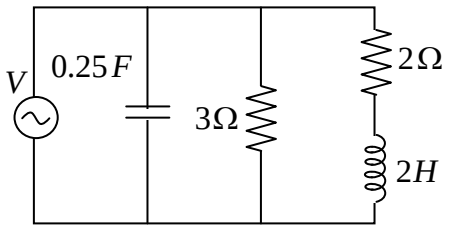

(a) 1.41 (b) 1.0 (c) 2.0 (d) 1.73

JEST-2014

---

16. AC Analysis of R-L-C (Solution)

Ans. 1: (b)

Solution: $\omega = \sqrt{\frac{1}{LC} - \frac{R^2}{L^2}} = 1.0$ (where $R = 2\Omega,\ L = 2\,H,\ C = 0.25\ F$)

Practice Set – Quantum Mechanics

JEST Previous Year Question

(2012 To 2020)

1.	Particle Nature of Wave	0
2.	Wave Nature of Particle	0
3.	Hydrogen Atom	02
4.	Tools of Quantum Mechanics	0
5.	Postulates of Quantum Mechanics	23
6.	Free Particle	01
7.	Particle in box	03
8.	Harmonic Oscillator	10
9.	Dirac Function	01
10.	2D and 3D System	03
11.	Angular Momentum	08
12.	Spin	13
13.	Radial Wave Function	02
14.	Non Degenerate Perturbation	04
15.	Degenarate Perturbation	0
16.	Time Dependent Perturbation	0
17.	Variational Method	01
18.	WKB Approximation	01
19.	Scattering	0
20.	Relativistic Quantum Mechanics	0
21.	Identical Particle	03
Total Number of Questions		75

3. Hydrogen Atom

Q1. Consider the Bohr model of the hydrogen atom. If α is the fine-structure constant, the velocity of the electron in its lowest orbit is

(a) $\frac{c}{1+\alpha}$ (b) $\frac{c}{1+\alpha^2}$ or $(1-\alpha)\ c$

(c) $\alpha^2 c$ (d) αc

JEST-2012

Q2. What is the binding energy of an electron in the ground state of a He^+ ion?

(a) $6.8\,eV$ (b) $13.6\,eV$ (c) $27.2\,eV$ (d) $54.4\,eV$

JEST-2019

---

3. Hydrogen Atom (Solution)

Ans. 1: (d)

Solution: $mvr = n\hbar$

$$\frac{mv^2}{r} = \frac{1}{4\pi \in_0}\frac{ze^2}{r^2} \Rightarrow r = \frac{1}{4\pi \in_0}\frac{ze^2}{mr^2}$$

$$mv \cdot \frac{1}{4\pi \in_0}\frac{ze^2}{mv^2} = n\hbar$$

$v = \dfrac{ze^2}{4\pi \in_0 n\hbar}$ and fine structure constant $\alpha = \dfrac{e^2}{4\pi \in_0 \hbar c}$

For lowest orbit, $v = \dfrac{ze^2}{4\pi \in_0 \hbar} \Rightarrow v = \dfrac{ze^2}{4\pi \in_0 \hbar c}c$

$$v = \alpha c$$

Ans. 2: (d)

Solution: $E = -\dfrac{13.6}{n^2}z^2(eV)$

$He^+ : z = 2$

$$\therefore E = \frac{-13.6 \times 4}{n^2}(eV)$$

The binding energy of an electron in ground state is

$$E = \frac{-13.6 \times 4}{(1)^2}(eV) = 54.4\,eV$$

---

5. Postulates of Quantum Mechanics

Q1. The ground state (apart from normalization) of a particle of unit mass moving in a one-dimensional potential V(x) is $\exp\left(-x^2/2\right)\cosh\left(\sqrt{2}x\right)$. The potential V(x), in suitable units so that h = 1, is (up to an addiative constant.)

(a) $\pi^2/2$
(b) $\pi^2/2-\sqrt{2}x\tanh\left(\sqrt{2}x\right)$
(c) $\pi^2/2-\sqrt{2}x\tan\left(\sqrt{2}x\right)$
(d) $\pi^2/2-\sqrt{2}x\coth\left(\sqrt{2}x\right)$

JEST-2012

Q2. The wave function of a free particle in one dimension is given by $\psi(x)=A\sin x+B\sin 3x$. Then $\psi(x)$ is an eigenstate of

(a) the position operator
(b) the Hamiltonian
(c) the momentum operator
(d) the parity operator

JEST-2012

Q3. The quantum state $\sin x\left|\uparrow\right\rangle+\exp(i\phi)\cos x\left|\downarrow\right\rangle$, where $\left\langle\uparrow\middle|\downarrow\right\rangle=0$ and x, ϕ are, real, is orthogonal to:

(a) $\sin x\left|\uparrow\right\rangle$
(b) $\cos x\left|\uparrow\right\rangle+\exp(i\phi)\sin x\left|\downarrow\right\rangle$
(c) $-\cos x\left|\uparrow\right\rangle-\exp(i\phi)\sin x\left|\downarrow\right\rangle$
(d) $-\exp(-i\phi)\cos x\left|\uparrow\right\rangle+\sin x\left|\downarrow\right\rangle$

JEST-2012

Q4. The hermitian conjugate of the operator $\left(\frac{-\partial}{\partial x}\right)$ is

(a) $\frac{\partial}{\partial x}$
(b) $-\frac{\partial}{\partial x}$
(c) $i\frac{\partial}{\partial x}$
(d) $-i\frac{\partial}{\partial x}$

JEST-2013

Q5. If the expectation value of the momentum is $\langle p\rangle$ for the wavefunction $\psi(x)$, then the expectation value of momentum for the wavefunction $e^{ikx/\hbar}\psi(x)$ is

(a) k
(b) $\langle p\rangle-k$
(c) $\langle p\rangle+k$
(d) $\langle p\rangle$

JEST-2013

Q6. The operator $\left(\frac{d}{dx}-x\right)\left(\frac{d}{dx}+x\right)$ is equivalent to

(a) $\frac{d^2}{dx^2}-x^2$

(b) $\frac{d^2}{dx^2}-x^2+1$

(c) $\frac{d^2}{dx^2}-x\frac{d}{dx}x^2+1$

(d) $\frac{d^2}{dx^2}-2x\frac{d}{dx}-x^2$

JEST-2013

Q7. The Hamiltonian operator for a two-state system is given by

$$H=\alpha\left(|1\rangle\langle 1|-|2\rangle\langle 2|+|1\rangle\langle 2|+|2\rangle\langle 1|\right),$$

where α is a positive number with the dimension of energy. The energy eigenstates corresponding to the larger and smaller eigenvalues respectively are:

(a) $|1\rangle-\left(\sqrt{2}+1\right)|2\rangle,\ |1\rangle+\left(\sqrt{2}-1\right)|2\rangle$

(b) $|1\rangle+\left(\sqrt{2}-1\right)|2\rangle,\ |1\rangle-\left(\sqrt{2}+1\right)|2\rangle$

(c) $|1\rangle+\left(\sqrt{2}-1\right)|2\rangle,\ \left(\sqrt{2}+1\right)|1\rangle-|2\rangle$

(d) $|1\rangle-\left(\sqrt{2}+1\right)|2\rangle,\ \left(\sqrt{2}-1\right)|1\rangle+|2\rangle$

JEST-2014

Q8. Consider a three-state system with energies E, E and $E-3g$ (where g is a constant) and respective eigenstates $|\psi_1\rangle=\frac{1}{\sqrt{2}}\begin{pmatrix}1\\-1\\0\end{pmatrix}$, $|\psi_2\rangle=\frac{1}{\sqrt{6}}\begin{pmatrix}1\\1\\-2\end{pmatrix}$ and $|\psi_3\rangle=\frac{1}{\sqrt{3}}\begin{pmatrix}1\\1\\1\end{pmatrix}$

If the system is initially (at $t=0$), in state $|\psi_i\rangle=\begin{pmatrix}1\\0\\0\end{pmatrix}$

what is the probability that at a later time t system will be in state $|\psi_f\rangle=\begin{pmatrix}0\\0\\1\end{pmatrix}$

(a) 0

(b) $\frac{4}{9}\sin^2\left(\frac{3gt}{2\hbar}\right)$

(c) $\frac{4}{9}\cos^2\left(\frac{3gt}{2\hbar}\right)$

(d) $\frac{4}{9}\sin^2\left(\frac{E-3gt}{2\hbar}\right)$

JEST-2014

Q9. The operator A and B share all the eigenstates. Then the least possible value of the product of uncertainties $\Delta A \Delta B$ is

(a) $\hbar$ (b) 0 (c) $\hbar/2$ (d) Determinant (AB)

JEST-2014

Q10. A particle of mass m moves in $1-$dimensional potential $V(x)$, which vanishes at infinity. The exact ground state eigenfunction is $\psi(x) = A\sec h(\lambda x)$, where A and λ are constants. The ground state energy eigenvalue of this system is,

(a) $E = \frac{\hbar^2\lambda^2}{m}$ (b) $E = -\frac{\hbar^2\lambda^2}{m}$ (c) $E = -\frac{\hbar^2\lambda^2}{2m}$ (d) $E = \frac{\hbar^2\lambda^2}{2m}$

JEST-2015

Q11. Given that ψ_1 and ψ_2 are eigenstates of a Hamiltonian with eigenvalues E_1 and E_2 respectively, what is the energy uncertainty in the state $(\psi_1 + \psi_2)$?

(a) $-\sqrt{E_1 E_2}$ (b) $\frac{1}{2}|E_1 - E_2|$ (c) $\frac{1}{2}(E_1 + E_2)$ (d) $\frac{1}{\sqrt{2}}|E_2 - E_1|$

JEST-2015

Q12. If a Hamiltonian H is given as $H = |0\rangle\langle 0| - |1\rangle\langle 1| + i(|0\rangle\langle 1| - |1\rangle\langle 0|)$, where $|0\rangle$ and $|1\rangle$ are orthonormal states, the eigenvalues of H are

(a) ± 1 (b) $\pm i$ (c) $\pm\sqrt{2}$ (d) $\pm i\sqrt{2}$

JEST-2015

Q13. The adjoint of a differential operator $\frac{d}{dx}$ acting on a wavefunction $\psi(x)$ for a quantum mechanical system is:

(a) $\frac{d}{dx}$ (b) $-i\hbar\frac{d}{dx}$ (c) $-\frac{d}{dx}$ (d) $i\hbar\frac{d}{dx}$

JEST-2016

Q14. For operators P and Q, the commutator $[P, Q^{-1}]$ is

(a) $Q^{-1}[P,Q]Q^{-1}$ (b) $-Q^{-1}[P,Q]Q^{-1}$ (c) $Q^{-1}[P,Q]Q$ (d) $-Q[P,Q]Q^{-1}$

JEST-2016

Q15. What is the dimension of $\frac{\hbar\partial\psi}{i\partial x}$, where ψ is a wavefunction in two dimensions?

(a) $kg\, m^{-1}s^{-2}$ (b) $kg\, s^{-2}$ (c) $kg\, m^{2}s^{-2}$ (d) $kg\, s^{-1}$

JEST-2017

Q16. If the ground state wavefunction of a particle moving in a one dimensional potential is proportional to $\exp\left(-x^2/2\right)\cosh\left(\sqrt{2}x\right)$, then the potential in suitable units such that $\hbar = 1$, is proportional to

(a) x^2

(b) $x^2 - 2\sqrt{2}x\tanh\left(\sqrt{2}x\right)$

(c) $x^2 - 2\sqrt{2}x\tan\left(\sqrt{2}x\right)$

(d) $x^2 - 2\sqrt{2}x\coth\left(\sqrt{2}x\right)$

JEST-2017

Q17. If $\hat{x}(t)$ be the position operator at a time t in the Heisenberg picture for a particle described by the Hamiltonian, $\hat{H} = \frac{\hat{p}^2}{2m} + \frac{1}{2}m\omega^2\hat{x}^2$ what is $e^{i\omega t}\langle 0|\hat{x}(t)\hat{x}(0)|0\rangle$ in units of $\frac{\hbar}{2m\omega}$ where $|0\rangle$ is the ground state?

JEST-2017

Q18. Consider the Hamiltonian

$$H(t) = \alpha\begin{pmatrix} 1 & 0 & 0 \\ 0 & 2 & 0 \\ 0 & 0 & 3 \end{pmatrix} + \beta t\begin{pmatrix} 0 & 0 & 1 \\ 0 & 0 & 0 \\ 1 & 0 & -2 \end{pmatrix}$$

The time dependent function $\beta(t) = \alpha$ for $t \le 0$ and zero for $t > 0$. Find $\left|\langle\Psi(t<0)|\Psi(t>0)\rangle\right|^2$, where $|\Psi(t<0)\rangle$ is the normalised ground state of the system at a time $t<0$ and $|\Psi(t>0)\rangle$ is the state of the system at $t>0$.

(a) $\frac{1}{2}\left(1+\cos(2\alpha t)\right)$

(b) $\frac{1}{2}\left(1+\cos(\alpha t)\right)$

(c) $\frac{1}{2}\left(1+\sin(2\alpha t)\right)$

(d) $\frac{1}{2}\left(1+\sin(\alpha t)\right)$

JEST-2017

Q19. If $\psi(x)$ is an infinitely differentiable function, then $\hat{D}\psi(x)$, where the operator $\hat{D} = \exp\left(ax\frac{d}{dx}\right)$, is

(a) $\psi(x+a)$ (b) $\psi(ae^a + x)$ (c) $\psi(e^a x)$ (d) $e^a\psi(x)$

JEST-2018

Q20. Consider two canonically conjugate operators $\hat{X}$ and $\hat{Y}$ such that $\left[\hat{X},\hat{Y}\right] = i\hbar I$, where I is identity operator. If $\hat{X} = \alpha_{11}\hat{Q}_1 + \alpha_{12}\hat{Q}_2, \hat{Y} = \alpha_{21}\hat{Q}_1 + \alpha_{22}\hat{Q}_2$, where α_{ij} are complex numbers and $\left[\hat{Q}_1,\hat{Q}_2\right] = zI$, the value of $\alpha_{11}\alpha_{22} - \alpha_{12}\alpha_{21}$ is

(a) $i\hbar z$ (b) $\frac{i\hbar}{z}$ (c) $i\hbar$ (d) z

JEST-2018

Q21. Consider a wavepacket defined by

$$\psi(x) = \int_{-\infty}^{\infty} dk f(k)\exp\left[i(kx)\right]$$

Further, $f(k) = 0$ for $|k| > \frac{K}{2}$ and $f(k) = a$ for $|k| \le \frac{K}{2}$. Then, the form of normalized $\psi(x)$ is

(a) $\frac{\sqrt{8\pi K}}{x}\sin\frac{Kx}{2}$ (b) $\sqrt{\frac{2}{\pi K}}\frac{\sin\frac{Kx}{2}}{x}$ (c) $\frac{\sqrt{8\pi K}}{x}\cos\frac{Kx}{2}$ (d) $\sqrt{\frac{2}{\pi K}}\frac{\sin\frac{Kx}{2}}{x}$

JEST-2018

Q22. A two-state quantum system has energy eigenvalues $\pm\in$ corresponding to normalised states ψ_+. At time $t = 0$ the system is in the quantum state $\frac{\left[\psi_+ + \psi_-\right]}{\sqrt{2}}$. Find the $10000\times$ probability that the system will be in the same state at time $t = \frac{h}{(6\in)}$, where h is the Planck's constant.

JEST-2020

Q23. The wave function of an electron in one dimension is given by

$$\psi(x)=\begin{cases} 0, & \text{for } x<0 \\ 2\sqrt{3}e^{-x}\left(1-e^{-x}\right), & \text{for } x\geq 0 \end{cases}$$

The ratio between the expected position $\langle x\rangle$ and the most probable position x_m is

(a) 0.856 (b) 1.563 (c) 2.784 (d) 3.567

JEST-2020

---

5. Postulates of Quantum Mechanics (Solution)

Ans. 1: (b)

Ans. 2: (d)

Solution: $\psi(-x)=\psi(x)$

$=-\psi(x)$ {parity (even and odd)

$\psi(-x)=A\sin(-x)+B\sin(-3x)=-[A\sin x+B\sin 3x]$

$\psi(-x)=-\psi(x)\Rightarrow$ negative parity i.e. parity operator

Ans. 3: (d)

Solution: $\langle\uparrow\|\downarrow\rangle=0$, $|\psi\rangle=\sin x|\uparrow\rangle+\exp(i\phi)\cos x|\downarrow\rangle$

$$\langle\psi'|\psi\rangle=-\exp(i\phi)\cos x\sin x\langle\uparrow|\uparrow\rangle-\exp(i\phi)\exp(i\phi)\cos x\langle\downarrow|\uparrow\rangle$$
$$+\sin^2 x\langle\downarrow|\uparrow\rangle+\exp(i\phi)\cos x\sin x\langle\downarrow|\downarrow\rangle$$
$$=-\exp(i\phi)\cos x\sin x+\exp(i\phi)\cos x\sin x=0$$

Ans. 4: (a)

Solution: $\Rightarrow\left(\psi^*(x)-\frac{\partial}{\partial x}\psi(x)\right)^\dagger=\left(\frac{-\partial\psi^*(x)}{\partial x}\psi(x)\right)$

$$\Rightarrow\int_{-\infty}^{\infty}\psi^*(x)\left[-\frac{\partial}{\partial x}\psi(x)\right]dx=\psi^*(x)\psi(x)\Big|_{-\infty}^{\infty}-\int_{-\infty}^{\infty}-\frac{\partial\psi^*(x)}{\partial x}\psi(x)dx$$

$$=\int_{-\infty}^{\infty}\frac{\partial\psi^*(x)}{\partial x}\psi(x)dx$$

Ans. 5: (c)

Solution: $\int_{-\infty}^{\infty}\psi^*(x)\left(-i\hbar\frac{\partial}{\partial x}\right)\psi(x)dx=\langle p\rangle$

Now

$$\int_{-\infty}^{\infty}e^{-\frac{ikx}{\hbar}}\psi^*(x)\left(-i\hbar\frac{\partial}{\partial x}\right)e^{\frac{ikx}{\hbar}}\psi(x)dx\Rightarrow\int_{-\infty}^{\infty}e^{\frac{-ikx}{\hbar}}\psi^*(x)(-i\hbar)\left[e^{\frac{ikx}{\hbar}}\frac{\partial}{\partial x}\psi(x)+\frac{ik}{\hbar}e^{\frac{ikx}{\hbar}}\psi(x)\right]$$

$$\Rightarrow\int_{-\infty}^{\infty}e^{-\frac{ikx}{\hbar}}\psi^*(x)\left(-i\hbar\frac{\partial}{\partial x}\psi(x)\right)e^{\frac{ikx}{\hbar}}+\int_{-\infty}^{\infty}-i\hbar.\frac{ik}{\hbar}e^{\frac{-ikx}{\hbar}}\psi^*(x)\psi(x)dx$$

$$\Rightarrow\int_{-\infty}^{\infty}\psi^*(x)\left[-i\hbar\frac{\partial}{\partial x}\psi(x)\right]+k\int_{-\infty}^{\infty}\psi^*(x)\psi(x)\Rightarrow\langle p\rangle+K$$

Ans. 6: (b)

Solution: $\Rightarrow \left(\frac{d}{dx}-x\right)\left(\frac{d}{dx}+x\right)f(x) \Rightarrow \left(\frac{d}{dx}-x\right)\left[\frac{d}{dx}f(x)+xf(x)\right]$

$$\Rightarrow \frac{d}{dx}\left[\frac{d}{dx}f(x)+xf(x)\right]-x\frac{d}{dx}f(x)-x^2 f(x)$$

$$\Rightarrow \frac{d^2}{dx^2}f(x)+f(x)+x\frac{df(x)}{dx}-x\frac{d}{dx}f(x)-x^2 f(x)$$

$$\Rightarrow \frac{d^2}{dx^2}f(x)-x^2 f(x)+f(x)=\left(\frac{d^2}{dx^2}-x^2+1\right)f(x)$$

Ans. 7: (b)

Solution: $H=\alpha\left(|1\rangle\langle 1|-|2\rangle\langle 2|+|1\rangle\langle 2|+|2\rangle\langle 1|\right) \Rightarrow H|1\rangle=\alpha\left(|1\rangle+|2\rangle\right),\ \ H|2\rangle=\alpha\left(|1\rangle-|2\rangle\right)$

Lets check for option (b): $|1\rangle+\left(\sqrt{2}-1\right)|2\rangle,\ \ |1\rangle-\left(\sqrt{2}+1\right)|2\rangle$

Now $H|\psi\rangle=\alpha|\psi\rangle \Rightarrow H\left[|1\rangle+\left(\sqrt{2}-1\right)|2\rangle\right]=H|1\rangle+H\left(\sqrt{2}+1\right)|2\rangle$

$$H\left[|1\rangle+\left(\sqrt{2}-1\right)|2\rangle\right] \Rightarrow H\left(|1\rangle\right)+\left(\sqrt{2}-1\right)H|2\rangle \Rightarrow \alpha\left(|1\rangle+|2\rangle\right)+\left(\sqrt{2}-1\right)\alpha\left(|1\rangle-|2\rangle\right)$$

$$\Rightarrow \alpha\left[1+\sqrt{2}-1\right]|1\rangle+\alpha\left[1-\left(\sqrt{2}-1\right)\right]|2\rangle \Rightarrow \alpha\sqrt{2}|1\rangle+\alpha\left(2-\sqrt{2}\right)|2\rangle$$

$$\Rightarrow \alpha\sqrt{2}\left[|1\rangle+\left(\sqrt{2}-1\right)|2\rangle\right]$$

Now $H\left(|1\rangle-\sqrt{2}+1\right)|2\rangle \Rightarrow H\left[|1\rangle-\left(\sqrt{2}+1\right)|2\rangle\right] \Rightarrow H|1\rangle-H\left(\sqrt{2}+1\right)|2\rangle$

$$\Rightarrow \alpha\left(|1\rangle+|2\rangle\right)-\alpha\left[\left(\sqrt{2}+1\right)\left(|1\rangle-|2\rangle\right)\right] \Rightarrow \alpha\left(1-\sqrt{2}-1\right)|1\rangle+\alpha\left(1+\sqrt{2}+1\right)|2\rangle$$

$$\Rightarrow -\sqrt{2}\alpha|1\rangle+\left(2+\sqrt{2}\right)\alpha|2\rangle \Rightarrow -\alpha\sqrt{2}\left[|1\rangle-\left(1+\sqrt{2}\right)|2\rangle\right]$$

Ans. 8: (b)

Ans. 9: (b)

Solution: $\Delta A\cdot\Delta B \geq \left|\frac{[AB]}{2}\right|$

$\Delta A\cdot\Delta B \geq 0$ [$\because A$ and B have share their eigen values, so $[AB]=0$]

Ans. 10: (d)

Solution: $\because \psi(x) = A\sec h(\lambda x) \Rightarrow \frac{d\psi}{dx} = -A\lambda \sec h(\lambda x)\tanh(\lambda x)$

$$\Rightarrow \frac{d^2\psi}{dx^2} = -A\lambda\left[-\sec h(\lambda x)\tan^2 h(\lambda x)\lambda + \lambda \sec h(\lambda x)\sec^2 h(\lambda x)\right]$$

$$= -A\lambda^2\left[\sec h(\lambda x)\left[-\tan^2 h(\lambda x) + \sec^2 h(\lambda x)\right]\right]$$

$$= -A\lambda^2\left[\sec h(\lambda x)\left[\sec^2 h(\lambda x) - \tan^2 h(\lambda x)\right]\right]$$

$$= -A\lambda^2\left[\sec h(\lambda x)\left[\sec^2 h(\lambda x) - \left[1 - \sec^2 h(\lambda x)\right]\right]\right]$$

$\because \tan^2 h(\lambda x) = 1 - \sec^2 h(\lambda x)$

$$= -A\lambda^2\left[\sec h(\lambda x)\left[\sec^2 h(\lambda x) - 1 + \sec^2 h(\lambda x)\right]\right]$$

$$\Rightarrow \frac{d^2\psi}{dx^2} = -A\lambda^2\left[2\sec^3 h(\lambda x) - \sec h(\lambda x)\right]$$

Now put the value $\frac{d^2\psi}{dx^2}$ in equation $-\frac{\hbar^2}{2m}\frac{d^2\psi}{dx^2} + V(x)\psi(x) = E\psi(x)$

$$-\frac{\hbar^2}{2m}\lambda^2 A\left[2\sec^3 h(\lambda x) - \sec h(\lambda x)\right] + V(x)A\sec h(\lambda x) = EA\sec h(\lambda x)$$

$\because V(x) \to 0 \quad as \quad x \to \infty$

$$\Rightarrow +\frac{\hbar^2}{2m}\lambda^2 A\sec h(\lambda x) - \frac{\hbar^2\lambda^2}{2m}2A\sec^3 h(\lambda x) = EA\sec h(\lambda x)$$

Now we have to do approximation i.e. $\sec^3 h(\lambda x)$ dacays very fastly as $x \to \infty$ so second term

$\frac{\hbar^2\lambda^2}{2m}2A\sec^3 h(\lambda x) = 0$. Thus $\frac{\hbar^2\lambda^2}{2m}A\sec h(\lambda x) = EA\sec h(\lambda x) \Rightarrow E = \frac{\hbar^2\lambda^2}{2m}$

Ans. 11: (b)

Solution: $\langle E^2 \rangle = \frac{1}{2}E_1^2 + \frac{1}{2}E_2^2 = \frac{(E_1^2 + E_2^2)}{2}$ and $\langle E \rangle = \frac{1}{2}E_1 + \frac{1}{2}E_2$

$$\because \Delta E = \sqrt{\langle E^2 \rangle - \langle E \rangle^2} = \sqrt{\frac{\left(E_1^2 + E_2^2\right)}{2} - \frac{1}{4}\left(E_1 + E_2\right)^2} = \sqrt{\frac{2E_1^2 + 2E_2^2 - E_1^2 - E_2^2 - 2E_1E_2}{4}}$$

$$\Rightarrow \Delta E = \sqrt{\frac{E_1^2 + E_2^2 - 2E_1E_2}{4}} = \frac{1}{2}\left|E_1 - E_2\right|$$

Ans. 12: (c)

Solution: $H = |0\rangle\langle 0| - |1\rangle\langle 1| + i\left(|0\rangle\langle 1| - |1\rangle\langle 0|\right)$

$H|0\rangle = |0\rangle - i|1\rangle$ and $H|1\rangle = -|1\rangle + i|0\rangle$

The matrix representation of H is $\begin{vmatrix} \langle 0|H|0\rangle & \langle 0|H|1\rangle \\ \langle 1|H|0\rangle & \langle 1|H|1\rangle \end{vmatrix} = \begin{pmatrix} 1 & i \\ -i & -1 \end{pmatrix}$

Eigenvalue of H $\begin{pmatrix} 1-\lambda & i \\ -i & -1-\lambda \end{pmatrix} = 0 \Rightarrow -\left(1-\lambda^2\right) - 1 = -0 \Rightarrow \lambda = \pm\sqrt{2}$

Ans. 13: (c)

Ans. 14: (b)

Solution: $\left[P, Q^{-1}\right] = PQ^{-1} - Q^{-1}P$

$$-Q^{-1}\left[P,Q\right]Q^{-1} = -Q^{-1}\left[PQ - QP\right]Q^{-1} = -Q^{-1}\left[PQQ^{-1} - QPQ^{-1}\right]$$

$$= -Q^{-1}P + PQ^{-1} = \left[P, Q^{-1}\right]$$

Ans. 15: (d)

Solution: Dimension of $\frac{\hbar\partial\psi}{i\partial x} = \frac{\dim of\ \hbar}{\dim\ of\ x} = \frac{kg \cdot m \cdot \sec^{-2} \cdot \sec}{m} = kg\sec^{-1}$

Ans. 16: (b)

Solution: From figure, we can conclude that option (b) is the correct answer.

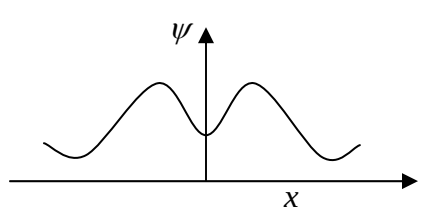

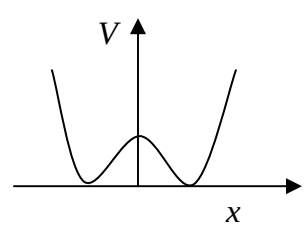

Ans. 17:

Solution: Operator $\hat{X}(t)$ in Hisenburg picture is written as

$$\hat{X}(t) = e^{iHt/\hbar}\hat{X}(0)e^{iHt/\hbar}$$

Thus, $\langle 0|\hat{X}(t)\hat{X}(0)|0\rangle = \langle 0|e^{iHt/\hbar}X(0)e^{-iHt/\hbar}X(0)|0\rangle$

Here, $\hat{X}(0)|0\rangle = \sqrt{\frac{\hbar}{2m\omega}}|1\rangle$

So, above equation reduces as,

$$\langle 0|\hat{X}(t)\hat{X}(0)|0\rangle = \sqrt{\frac{\hbar}{2m\omega}}\langle 0|e^{iHt/\hbar}\hat{X}(0)e^{-iHt/\hbar}|1\rangle$$

In integral form,

$$\langle 0|\hat{X}(t)\hat{X}(0)|0\rangle = \sqrt{\frac{\hbar}{2m\omega}}\int \phi_0^*(t)\hat{X}(0)\phi_1(t)dx$$

$$= \sqrt{\frac{\hbar}{2m\omega}}\int \phi_0^* e^{\frac{i\hbar\omega t}{2\hbar}}\hat{X}(0)\phi_1 e^{\frac{-i3\hbar\omega t}{2\hbar}}dx = \sqrt{\frac{\hbar}{2m\omega}}e^{-i\omega t}\int \phi_0^* x\phi_1 dx$$

Therefore, $e^{i\omega t}\langle 0|\hat{X}(t)\hat{X}(0)|0\rangle = \left(\sqrt{\frac{\hbar}{2m\omega}}\right)^2\langle 0|a+a^\dagger|1\rangle$

$$e^{i\omega t}\langle 0|\hat{X}(t)\hat{X}(0)|0\rangle = \frac{\hbar}{2m\omega}$$

Ans. 18: (a)

Solution: $H(t) = \alpha\begin{pmatrix}1 & 0 & 0\\ 0 & 2 & 0\\ 0 & 0 & 3\end{pmatrix} + \beta(t)\begin{pmatrix}0 & 0 & 1\\ 0 & 0 & 0\\ 1 & 0 & -2\end{pmatrix}$

Time dependent function $\beta(t) = \begin{cases}\alpha & , \ t \le 0\\ 0 & , \ t > 0\end{cases}$

When $t \le 0$

$$H(t) = \alpha\begin{pmatrix}1 & 0 & 1\\ 0 & 2 & 0\\ 1 & 0 & 1\end{pmatrix}$$

Eigen value are 0 , 2α , 2α .

For Eigen value zero, the ground state wave function is $|\psi(t \le 0)\rangle = \frac{1}{\sqrt{2}}\begin{pmatrix}1\\ 0\\ -1\end{pmatrix}$.

And $\left|\psi\left(t\geq 0\right)\right\rangle = \frac{1}{\sqrt{2}}\begin{pmatrix}1\\0\\0\end{pmatrix}e^{\frac{-i\alpha t}{\hbar}} - \frac{1}{\sqrt{2}}\begin{pmatrix}0\\0\\1\end{pmatrix}e^{\frac{-i3\alpha t}{\hbar}}$

Now, $\left|\left\langle\psi\left(t<0\right)\middle|\psi\left(t>0\right)\right\rangle\right|^2 = \frac{1}{4}\left|e^{\frac{-i\alpha t}{\hbar}} + e^{\frac{-i3\alpha t}{\hbar}}\right|^2$

$$= \frac{1}{4}\left[\left(\cos\frac{\alpha t}{\hbar} + \cos\frac{3\alpha t}{\hbar}\right)^2 + \left(-\sin\frac{\alpha t}{\hbar} - \sin\frac{3\alpha t}{\hbar}\right)^2\right]$$

$$= \frac{1}{4}\left[1+1+2\left(\cos\frac{\alpha t}{\hbar}.\cos\frac{3\alpha t}{\hbar} + \sin\frac{\alpha t}{\hbar}\cos\frac{3\alpha}{\hbar}\right)\right] = \frac{1}{4}\left[2+2.\cos\frac{2\alpha t}{\hbar}\right] = \frac{1}{2}\left[1+\cos\frac{2\alpha t}{\hbar}\right]$$

Ans. 19: (c)

Ans. 20: (b)

Solution: $\left[\hat{X},\hat{Y}\right] = i\hbar I$, $\left[\alpha_{11}\hat{Q}_1 + \alpha_{12}\hat{Q}_2, \alpha_{21}\hat{Q}_1 + \alpha_{22}\hat{Q}_2\right] = i\hbar I$

$$\Rightarrow \left[\alpha_{11}\hat{Q}_1, \alpha_{22}\hat{Q}_2\right] + \left[\alpha_{12}\hat{Q}_2, \alpha_{21}\hat{Q}_1\right] = \alpha_{11}\alpha_{22}\left[\hat{Q}_1, \hat{Q}_2\right] + \alpha_{12}\alpha_{21}\left[\hat{Q}_2, \hat{Q}_1\right]$$

$$\left[\alpha_{11}\alpha_{22} - \alpha_{12}\alpha_{21}\right]zI = i\hbar I \Rightarrow \left[\alpha_{11}\alpha_{22} - \alpha_{12}\alpha_{21}\right] = \frac{i\hbar}{z}$$

Ans. 21: (b)

Solution: Given $\psi\left(x\right) = \int_{-\infty}^{\infty} dk f\left(k\right)e^{ikx}$

$$\psi\left(x\right) = \int_{-K/2}^{K/2} dK\, a\, e^{iKx} \qquad \left|K\right| > \frac{K}{2}$$

$$= \frac{q}{ix}e^{ikx}\Big|_{-K/2}^{K/2} = \frac{q}{ix}e^{i\frac{K}{2}x} - e^{-i\frac{K}{2}x} \qquad K > \frac{K}{2} \qquad f\left(K\right) = 0$$

$$\psi\left(x\right) = \frac{2}{x}\sin\frac{kx}{2}$$

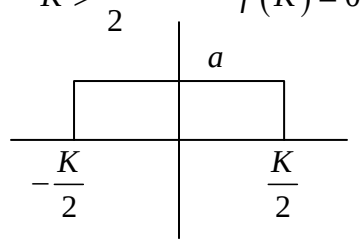

$$A^2\int_{-\infty}^{\infty}\frac{2^2}{x^2}\frac{Kx}{2}dx = 1$$

$$4A^2\int_{-\infty}^{\infty}\frac{h^2 Kx/2}{x^2} = 1$$

$$4A^2\frac{\pi x}{2} = 1$$

$$A^2 = \frac{1}{2\pi K} \Rightarrow A = \sqrt{\frac{1}{2\pi K}}$$

$$\psi(x) = \frac{2}{x}\sqrt{\frac{1}{2\pi K}} \cdot \sin\frac{Kx}{2}$$

$$\therefore \ \psi(x) = \sqrt{\frac{2}{\pi K}}\frac{\sin\frac{Kx}{2}}{x}$$

Ans. 22: 2500

Solution: $t = 0$

$$|\psi\rangle = \frac{1}{\sqrt{2}}(\psi_+ + \psi_-)$$

$$|\psi(t)\rangle = \frac{1}{\sqrt{2}}\left[\psi_+ e^{-\frac{i\in t}{\hbar}} + \psi_- e^{\frac{i\in t}{\hbar}}\right]$$

$$t = \frac{h}{6\in}$$

$$|\psi(t)\rangle = \frac{1}{\sqrt{2}}\left[\psi_+ e^{-\frac{i2\pi\in}{\hbar}\frac{h}{6\in}} + \psi_- e^{\frac{i2\pi\in}{\hbar}\frac{h}{6\in}}\right] = \frac{1}{\sqrt{2}}\left[\psi_+ e^{-\frac{\pi i}{3}} + \psi_- e^{\frac{\pi i}{3}}\right]$$

$$\left|\langle\psi|\psi(t)\rangle\right|^2 = \frac{1}{4}\left|\frac{\left(e^{-\frac{\pi i}{3}} + e^{\frac{\pi i}{3}}\right)}{2}\right|^2 = \frac{\left|2\cos\frac{\pi}{3}\right|^2}{4} = \frac{1}{4}$$

$$\frac{1}{4}\times 10000 = 2500$$

Ans. 23: (b)

Solution: $\psi(x) = 2\sqrt{3}e^{-x}\left(1 - e^{-x}\right) \qquad x \geq 0$

$$= 0 \qquad x \leq 0$$

$$|\psi^2| = \left(2\sqrt{3}\left(e^{-x} - e^{-2x}\right)\right)\left(2\sqrt{3}\left(e^{-x} - e^{-2x}\right)\right)$$

$$= 4\times 3\left(e^{-2x} + e^{-4x} - e^{-3x} - e^{-3x}\right)$$

$$=12\left(e^{-4x}+e^{-2x}-2e^{-3x}\right)$$

$$\int_0^\infty |\psi|^2\,dx=-\left[12\left[\frac{-1}{4}-\frac{1}{2}+\frac{2}{3}\right]\right]=-12\left[\frac{-3-6+8}{12}\right]=1$$

For most probable

$$\frac{d|\psi|^2}{dx}=0$$

$$-4e^{-4x}-2e^{-2x}+6e^{-3x}=0\Rightarrow e^{-2x}\left[-4e^{-2x}-2+6e^{-x}\right]=0$$

$$-4e^{-2x}-2+6e^{-x}=0\Rightarrow 4e^{-2x}-6e^{-x}+2=0$$

$$4y^2-6y+2=0\Rightarrow 2y^2-3y+1=0\Rightarrow 2y^2-2y-y+2=0$$

$$2y(y-1)-1(y-1)=0\Rightarrow (y-1)(2y-1)=0$$

$$y=1 \qquad y=\frac{1}{2}$$

$$e^{-x}=1 \qquad ex=\frac{1}{2}$$

$$x=10 \qquad x=-142$$

$$x=0.693$$

$$\langle x\rangle=\int x|\psi|^2\,dx$$

$$=\left[\int_0^\infty xe^{-4x}dx+\int_0^\infty xe^{-2x}dx-2\int_0^\infty xe^{-3x}dx\right]$$

$$=12\left(\frac{1}{4^2}+\frac{1}{2^2}-\frac{2}{3^2}\right)=12\left(\frac{1}{16}+\frac{1}{4}-\frac{2}{9}\right)=12\left(\frac{9+36-32}{144}\right)$$

$$\langle x\rangle=\frac{13}{12}=1.08$$

$$x_p=0.693$$

$$\frac{\langle x\rangle}{x_p}=\frac{1.08}{0.693}=1.563$$

---

6. Free Particle

Q1. A free particle of energy E, characterized by a plane wave of wavelength λ enters a region of constant potential $-V$ (where $E > V > 0$). Within the region of the potential, the wavelength of the particle is $\frac{\lambda}{2}$. The ratio $\frac{V}{E}$ is:

(a) $\frac{-1}{3}$ (b) -3 (c) 3 (d) $\frac{1}{3}$

JEST-2020

---

6. Free Particle (Solution)

Ans. 1: (c)

Solution: $E = \frac{P^2}{2m} = \frac{\hbar^2}{2m\lambda^2}$

$$\frac{\lambda}{2} = \sqrt{\frac{\hbar}{2m(E+V)}} \qquad \lambda^2 = \frac{\hbar^2}{2mE}$$

$$\left(\frac{\lambda}{2}\right)^2 = \frac{\hbar^2}{2m(E+V)}$$

$$u = \frac{E+V}{E} = 1 + \frac{V}{E} \Rightarrow \frac{V}{E} = 3$$

---

7. Particle in Box

Q1. A particle of mass m is contained in a one-dimensional infinite well extending from $x=-\frac{L}{2}$ to $x=\frac{L}{2}$. The particle is in its ground state given by $\varphi_0(x)=\sqrt{2/L}\cos(\pi x/L)$. The walls of the box are moved suddenly to form a box extending from $x=-L$ to $x=L$. what is the probability that the particle will be in the ground state after this sudden expansion?

(a) $(8/3\pi)^2$ (b) 0 (c) $(16/3\pi)^2$ (d) $(4/3\pi)^2$

JEST-2013

Q2. The normalized eigenfunctions and eigenvalues of the Hamiltonian of a Particle confined to move between $0 \le x \le a$ in one dimension are

$$\psi_n(x)=\sqrt{\frac{2}{a}}\sin\frac{n\pi x}{a} \text{ and } E_n=\frac{n^2\pi^2\hbar^2}{2ma^2}$$

respectively. Here $1,2,3....$ Suppose the state of the particle is

$$\psi(x)=A\sin\left(\frac{\pi x}{a}\right)\left[1+\cos\left(\frac{\pi x}{a}\right)\right]$$

where A is the normalization constant. If the energy of the particle is measured, the probability to get the result as $\frac{\pi^2\hbar^2}{2ma^2}$ is $\frac{x}{100}$. What is the value of x?

JEST-2018

Q3. Consider a quantum particle in a one-dimensional box of length L. The coordinates of the leftmost wall of the box is at $x=0$ and that of the rightmost wall is at $x=L$. The particle is in the ground state at $t=0$. At $t=0$, we suddenly change the length of the box to $3L$ by moving the right wall. What is the probability that the particle is in the ground state of the new system immediately after the change?

(a) 0.36 (b) $\frac{9}{8\pi}$ (c) $\frac{81}{64\pi^2}$ (d) $\frac{0.5}{\pi}L$

JEST-2019

---

7. Particle in Box (Solution)

Ans. 1: (a)

Solution: Probability $\left|\langle\phi_0|\phi_1\rangle\right|^2, \phi_0 = \sqrt{\frac{2}{L}}\cos\frac{\pi x}{L}, \phi_1\sqrt{\frac{2}{2L}}\cos\frac{\pi x}{2L}$

Since the wall of box are moved suddenly then

$$\text{Probability} = \left|\int_{-L/2}^{L/2}\sqrt{\frac{2}{L}}\cdot\sqrt{\frac{1}{L}}\frac{\cos\pi x}{L}\cdot\frac{\cos\pi x}{2L}dx\right|^2 = \left|\frac{\sqrt{2}}{L}\frac{1}{2}\int_{-L/2}^{L/2}\frac{2\cos\pi x}{L}\cdot\frac{\cos\pi x}{2L}dx\right|^2$$

$$\Rightarrow\left|\frac{\sqrt{2}}{L}\cdot\frac{1}{2}\int_{-L/2}^{L/2}\left[\cos\left(\frac{3\pi x}{2L}\right)+\cos\left(\frac{\pi x}{2L}\right)\right]dx\right|^2 \Rightarrow\left|\frac{\sqrt{2}}{L}\cdot\frac{1}{2}\left[\frac{2L}{3\pi}\sin\frac{3\pi x}{2L}+\frac{2L}{\pi}\sin\frac{\pi x}{2L}\right]_{-L/2}^{L/2}\right|^2$$

$$\Rightarrow\left|\frac{\sqrt{2}}{L}\cdot\frac{1}{2}\left[\frac{2L}{3\pi}\left(\sin\frac{3\pi}{4}+\sin\frac{3\pi}{4}\right)+\frac{2L}{\pi}\left(\sin\frac{\pi}{4}+\sin\frac{\pi}{4}\right)\right]\right|^2 \Rightarrow\left|\frac{2}{3\pi}+\frac{2}{\pi}\right|^2=\left|\frac{8}{3\pi}\right|^2$$

Ans. 2: 80

Solution: $\psi(x)=A\sin\left(\frac{\pi x}{a}\right)\left[1+\cos\left(\frac{\pi x}{a}\right)\right]=\sqrt{\frac{a}{2}}A\left[\sqrt{\frac{2}{a}}\sin\left(\frac{\pi x}{a}\right)+\frac{2}{2}\sqrt{\frac{2}{a}}\sin\left(\frac{\pi x}{a}\right)\cos\left(\frac{\pi x}{a}\right)\right]$

$$\psi(x)=\sqrt{\frac{a}{2}}A\left[\sqrt{\frac{2}{a}}\sin\left(\frac{\pi x}{a}\right)+\frac{2}{2}\sqrt{\frac{2}{a}}\sin\left(\frac{\pi x}{a}\right)\cos\left(\frac{\pi x}{a}\right)\right]$$

$$|\psi\rangle=\sqrt{\frac{a}{2}}A\left[|\phi_1\rangle+\frac{1}{2}|\phi_2\rangle\right]$$

$$\langle\psi|\psi\rangle=1\Rightarrow\frac{a}{2}A^2\left[1+\frac{1}{4}\right]\Rightarrow A^2\frac{a}{2}\times\frac{5}{4}=1\Rightarrow A=\sqrt{\frac{8}{5a}}$$

$$|\psi\rangle=\sqrt{\frac{a}{2}}.\sqrt{\frac{8}{5a}}\left[|\phi_1\rangle+\frac{1}{2}|\phi_2\rangle\right]\Rightarrow\sqrt{\frac{4}{5}}|\phi_1\rangle+\sqrt{\frac{1}{5}}|\phi_2\rangle$$

$$P\left(\frac{\pi^2\hbar^2}{2ma^2}\right)=\frac{4}{5}=\frac{x}{100}\Rightarrow x=\frac{4}{5}\times100=80$$

Ans. 3: (c)

Solution: $|\phi_1\rangle = \begin{cases} \sqrt{\frac{2}{3a}} \sin\frac{\pi x}{3a} . & 0 < x < 3a \\ 0, & otherwise \end{cases}$ $\qquad |\psi\rangle = \begin{cases} \sqrt{\frac{2}{a}} \sin\frac{\pi x}{a} . & 0 < x < a \\ 0, & otherwise \end{cases}$

$$P\left(\frac{\pi^2\hbar^2}{2m(3a)^2}\right) = \frac{|\langle\phi_1|\psi\rangle|^2}{\langle\psi|\psi\rangle} = \int_0^a \sqrt{\frac{2}{3a}} \sin\frac{\pi x}{3a} \sqrt{\frac{2}{a}} \sin\frac{\pi x}{a} dx = \frac{81}{64\pi^2}$$

---

8. Harmonic Oscillator

Q1. A quantum mechanical particle in a harmonic oscillator potential has the initial wave function $\psi_0(x)+\psi_1(x)$, where ψ_0 and ψ_1 are the real wavefunctions in the ground and first excited state of the harmonic oscillator Hamiltonian. For convenience we take $m=\hbar=\omega=1$ for the oscillator. What is the probability density of finding the particle at x at time $t=\pi$?

(a) $\left(\psi_1(x)-\psi_0(x)\right)^2$ (b) $\left(\psi_1(x)\right)^2-\left(\psi_0(x)\right)^2$

(c) $\left(\psi_1(x)+\psi_0(x)\right)^2$ (d) $\left(\psi_1(x)\right)^2+\left(\psi_0(x)\right)^2$

JEST-2013

Q2. Consider a harmonic oscillator in the state $|\psi\rangle=e^{-\frac{|\alpha|^2}{2}}e^{\alpha a^+}|0\rangle$, where $|0\rangle$ is the ground state, a^+ is the raising operator and α is a complex number. What is the probability that the harmonic oscillator is in the nth eigenstate $|n\rangle$?

(a) $e^{-|\alpha^2|}\dfrac{|\alpha|^{2n}}{n!}$ (b) $e^{-\frac{|\alpha|^2}{2}}\dfrac{|\alpha|^n}{\sqrt{n!}}$

(c) $e^{-|\alpha|^2}\dfrac{|\alpha|^n}{n!}$ (d) $e^{-\frac{|\alpha|^2}{2}}\dfrac{|\alpha|^{2n}}{n!}$

JEST-2015

Q3. A particle moving under the influence of a potential $V(r)=\dfrac{kr^2}{2}$ has a wavefunction $\psi(r,t)$. If the wavefunction changes to $\psi(\alpha r,t)$, the ratio of the average final kinetic energy to the initial kinetic energy will be,

(a) $\dfrac{1}{\alpha^2}$ (b) α (c) $\dfrac{1}{\alpha}$ (d) α^2

JEST-2015

Q4. A one dimensional harmonic oscillator (mass m and frequency ω) is in a state $|\psi\rangle$ such that the only possible outcomes of an energy measurement are E_0, E_1 or E_2, where E_n is the energy of the n-th excited state. If H is the Hamiltonian of the oscillator, $\langle\psi|H|\psi\rangle = \frac{3\hbar\omega}{2}$ and $\langle\psi|H^2|\psi\rangle = \frac{11\hbar^2\omega^2}{4}$, then the probability that the energy measurement yields E_0 is

(a) $\frac{1}{2}$ (b) $\frac{1}{4}$ (c) $\frac{1}{8}$ (d) 0

JEST-2018

Q5. A harmonic oscillator has the following Hamiltonian

$$H_0 = \frac{\hat{p}^2}{2m} + \frac{1}{2}m\omega^2\hat{x}^2$$

It is perturbed with a potential $V = \lambda\hat{x}^4$. Some of the matrix elements of $\hat{x}^2$ in terms of its expectation value in the ground state are given as follows:

$$\langle 0|\hat{x}^2|0\rangle = C$$

$$\langle 0|\hat{x}^2|2\rangle = \sqrt{2}C$$

$$\langle 1|\hat{x}^2|1\rangle = 3C$$

$$\langle 1|\hat{x}^2|3\rangle = \sqrt{6}C$$

where $|n\rangle$ is the normalized eigenstate of H_0 corresponding to the eigenvalue $E_n = \hbar\omega\left(n + \frac{1}{2}\right)$. Suppose ΔE_0 and ΔE_1 denote the energy correction of $O(\lambda)$ to thee ground state and the first excited state, respectively. What is the fraction $\frac{\Delta E_1}{\Delta E_0}$?

JEST-2018

Q6. The wave function $\psi(x) = A\exp\left(-\frac{b^2x^2}{2}\right)$ (for real constants A and b) is a normalized eigen-function of the Schrodinger equation for a particle of mass m and energy E in a one dimensional potential $V(x)$ such that $V(x) = 0$ at $x = 0$. Which of the following is correct?

(a) $V = \frac{\hbar^2 b^4 x^2}{m}$ (b) $V = \frac{\hbar^2 b^4 x^2}{2m}$ (c) $E = \frac{\hbar^2 b^2}{4m}$ (d) $E = \frac{\hbar^2 b^2}{m}$

JEST-2019

Q7. A quantum particle of mass m is in a one dimensional potential of the form

$$V(x) = \begin{cases} \frac{1}{2}m\omega^2 x^2, & \text{if } x > 0 \\ \infty & \text{if } x \le 0 \end{cases}$$

where ω is a constant. Which one of the following represents the possible ground state wave function of the particle?

(a)
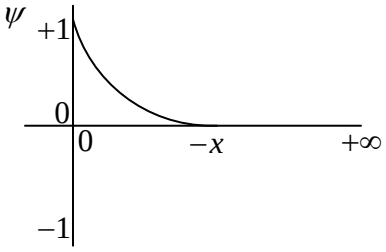

(b)
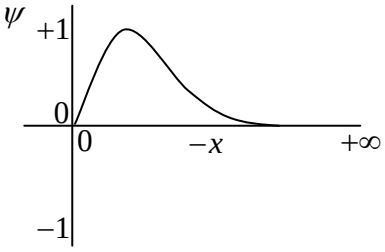

(c)
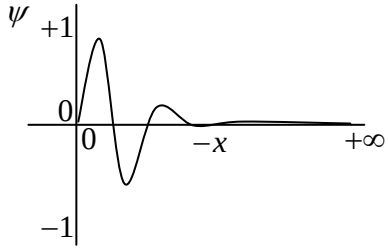

(d)
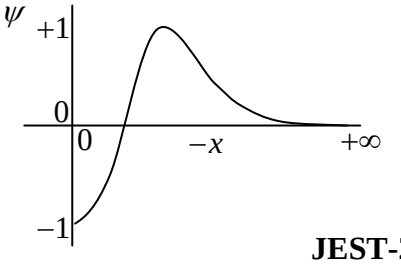

JEST-2019

Q8. Consider a quantum particle of mass m and a charge e moving in a two dimensional potential given as:

$$V(x,y)=\frac{k}{2}(x-y)^2+k(x+y)^2$$

The particle is also subject to an external electric field $\vec{E}=\lambda(\hat{i}-\hat{j})$, where λ is a constant $\hat{i}$ and $\hat{j}$ corresponds to unit vectors along x and y directions, respectively. Let E_1 and E_0 be the energies of the first excited state and ground state, respectively. What is the value of E_1-E_0?

(a) $\hbar\sqrt{\frac{2k}{m}}$ (b) $\hbar\sqrt{\frac{2k}{m}}+e\lambda^2$ (c) $3\hbar\sqrt{\frac{2k}{m}}$ (d) $3\hbar\sqrt{\frac{2k}{m}}+e\lambda^2$

JEST-2019

Q9. A one-dimensional harmonic oscillator is in the state

$$|\psi\rangle=\sum_{n=0}^{\infty}\frac{1}{\sqrt{n!}}|n\rangle$$

where $|n\rangle$ is the normalized energy eigenstate with eigenvalue $\left(n+\frac{1}{2}\right)\hbar\omega$. Let the expectation value of the Hamiltonian in the state $|\psi\rangle$ be expressed as $\frac{1}{2}\alpha\hbar\omega$. What is the value of α?

JEST-2019

Q10. $\phi_0(x)$ and $\phi_1(x)$ are respectively are orthonormal wavefunctions of the ground and first excited states of a one dimensional simple harmonic oscillator. Consider the normalised wave function $\psi(x)=c_0\phi_0(x)+c_1\phi_1(x)$, where c_0 and c_1 are real. For what values of c_0 and c_1 will $\langle\psi(x)|x|\psi(x)\rangle$ be maximized?

(a) $c_0=c_1=+1/\sqrt{2}$ (b) $c_0=-c_1=+1/\sqrt{2}$

(c) $c_0=+\sqrt{3}/2,\ c_1=+1/2$ (d) $c_0=+\sqrt{3}/2,\ c_1=-1/2$

JEST-2017

---

8. Harmonic Oscillator (Solution)

Ans. 1: (a)

Solution: $\psi(x)=\psi_0(x)+\psi_1(x)$

$$\psi(x,t)=\psi_0(x)e^{-i\frac{E_0 t}{\hbar}}+\psi_1(x)e^{-i\frac{E_1 t}{\hbar}}$$

Now probability density at time t

$$|\psi(x,t)|^2=\psi^*(x,t)\psi(x,t)=|\psi_0(x)|^2+|\psi_1(x)|^2+2\,\mathrm{Re}\,\psi_0^*(x)\psi_1(x)\cos(E_1-E_0)\frac{t}{\hbar}$$

putting $t=\pi$

$$|\psi(x,t)|^2=|\psi_0(x)|^2+|\psi_1(x)|^2+2\,\mathrm{Re}\,\psi_0^*(x)\psi_1(x)\cos\pi \qquad [\because E_1-E_0=\hbar\omega=1]$$

$$|\psi(x,t)|^2=|\psi_0(x)|^2+|\psi_1(x)|^2-2\,\mathrm{Re}\,\psi_0^*(x)\psi_1(x)=[\psi_1(x)-\psi_0(x)]^2$$

Ans. 2: (a)

Solution: $|\psi\rangle=e^{-\frac{|\alpha|^2}{2}}e^{\alpha a^+}|0\rangle=e^{-\frac{|\alpha|^2}{2}}\sum_n\frac{(\alpha a^+)^n}{\lfloor n}|0\rangle$ and $|n\rangle=\frac{(a^+)^n}{\sqrt{\lfloor n}}|0\rangle\Rightarrow(a^+)^n|0\rangle=\sqrt{\lfloor n}\,|n\rangle$

$$|\psi\rangle=e^{-\frac{|\alpha|^2}{2}}\sum_n\frac{(\alpha)^n\sqrt{\lfloor n}}{\lfloor n}|n\rangle\Rightarrow\langle\psi|\psi\rangle=e^{-|\alpha|^2}\sum\frac{(\alpha^*\alpha)^n\lfloor n}{(\lfloor n)^2}\langle n|n\rangle=e^{-|\alpha|^2}\sum_n\frac{|\alpha|^n}{\lfloor n}=e^{-|\alpha|^2}e^{|\alpha|^2}=1$$

Probability that $|\psi\rangle$ is in $|n\rangle$ state is, $\frac{|\langle n|\psi\rangle|^2}{\langle\psi|\psi\rangle}=|\langle n|\psi\rangle|^2$

$$|\psi\rangle=e^{-\frac{|\alpha|^2}{2}}\sum_n\frac{(\alpha)^n\sqrt{\lfloor n}}{\lfloor n}|n\rangle=e^{-\frac{|\alpha|^2}{2}}\sum_n\alpha^n\frac{1}{\sqrt{\lfloor n}}|n\rangle$$

$$\Rightarrow\langle n|\psi\rangle=e^{-\frac{|\alpha|^2}{2}}\sum_n\alpha^n\frac{1}{\sqrt{\lfloor n}}\langle n|n\rangle=\frac{e^{-\frac{|\alpha|^2}{2}}}{\sqrt{\lfloor n}}\alpha^n\Rightarrow|\langle n|\psi\rangle|^2=e^{-|\alpha|^2}\frac{|\alpha|^{2n}}{\lfloor n}$$

Ans. 3: (c)

Solution: For $\psi(r,t)$ the average kinetic energy $\langle T\rangle=\int_0^\infty\psi^*(r,t)\left(-\frac{\hbar^2}{2m}\right)(\nabla^2\psi)r^2dr$, ∇^2 is written in spherical polar coordinate, which is dimension of $(\text{length})^{-2}$

For wave function $\psi(\alpha r,t)$

$$\langle T_\alpha \rangle = \int_0^\infty \psi^*(\alpha r, t)\left(-\frac{\hbar^2}{2m}\right)\left(\nabla^2\psi(\alpha r, t)\right)r^2 dr$$

Put $\alpha r = r'$ or $r = \frac{r'}{\alpha} \Rightarrow dr = \frac{dr'}{\alpha}$ and $\nabla_r^2 = \alpha^2 \nabla_r^2$

$$\langle T_\alpha \rangle = \frac{\alpha^2}{\alpha^3}\int_0^\infty \psi^*(r',t)\left(-\frac{\hbar^2}{2m}\right)\nabla^2\psi(r',t)r'^2 dr' = \frac{1}{\alpha}\int_0^\infty \psi^*(r',t)\left(-\frac{\hbar^2}{2m}\right)\nabla^2\psi(r',t)r'^2 dr'$$

$$\Rightarrow \langle T_\alpha \rangle = \frac{\langle T \rangle}{\alpha} \Rightarrow \frac{\langle T_\alpha \rangle}{\langle T \rangle} = \frac{1}{\alpha}$$

Ans. 4: (b)

Solution: $|\psi\rangle = a|\phi_0\rangle + b|\phi_1\rangle + c|\phi_2\rangle$ let us assume a, b, c is real

$$\langle H \rangle = \frac{a^2 \times \frac{\hbar\omega}{2} + b^2 \times \frac{3\hbar\omega}{2} + c^2 \times \frac{5\hbar\omega}{2}}{a^2 + b^2 + c^2} = \frac{3}{4}\hbar\omega \Rightarrow \frac{a^2}{2} + \frac{3b^2}{2} + \frac{5c^2}{2} = \frac{3}{4}\hbar\omega \qquad \text{....(i)}$$

$$\langle H \rangle = \frac{a^2 \times \left(\frac{\hbar\omega}{2}\right)^2 + b^2 \times \left(\frac{3\hbar\omega}{2}\right)^2 + c^2 \times \left(\frac{5\hbar\omega}{2}\right)^2}{a^2 + b^2 + c^2} = \frac{11\hbar^2\omega^2}{4}$$

$$\Rightarrow \frac{a^2}{4} + \frac{9b^2}{4} + \frac{25c^2}{4} = \frac{11\hbar^2\omega^2}{4} \qquad \text{.....(ii)}$$

$$a^2 + b^2 + c^2 = 1 \qquad \text{....(iii)}$$

Solving $a^2 = \frac{1}{4}, b^2 = \frac{1}{2}, c^2 = \frac{1}{4}$

$$P\left(\frac{\hbar\omega}{2}\right) = \frac{a^2}{a^2 + b^2 + c^2} = a^2 = \frac{1}{4}$$

Ans. 5: 5

Solution: For n^{th} state $\Delta E_n = \langle n | X^4 | n \rangle = \frac{\hbar^2}{4m^2\omega^2}\left(6n^2 + 6n + 3\right)$

$$\Delta E_0 = \langle 0 | X^4 | 0 \rangle = \frac{3\hbar^2}{4m^2\omega^2} \quad \langle 1 | X^4 | 1 \rangle = \frac{\hbar^2}{4m^2\omega^2}\left(6.1^2 + 6.1 + 3\right) = \frac{15\hbar^2}{4m^2\omega^2}$$

$$\frac{\Delta E_1}{\Delta E_0} = 5$$

Ans. 6: (b)

Solution: Comparing with harmonic oscillator $\psi(x)=\left(\frac{m\omega}{\pi\hbar}\right)^{1/4}\exp\left(-\frac{m\omega x^2}{2\hbar}\right)$ the potential is

$V(x)=\frac{1}{2}m\omega^2x^2$ and energy is $E=\frac{\hbar\omega}{2}$

$\psi(x)=A\exp\left(-\frac{b^2x^2}{2}\right)$ $\quad \omega=\frac{b^2\hbar}{m}$ so $V(x)=\frac{b^4\hbar^2x^2}{2m}$ and energy $E=\frac{\hbar\omega}{2}\Rightarrow\frac{b^2\hbar^2}{2m}$

Ans. 7: (b)

Ans. 8: (a)

Solution: For constant electric field we know there is not any change in frequency and energy of each level is changed by constant value.

The total potential is

$$V(x,y)=\frac{k}{2}(x-y)^2+k(x+y)^2-\lambda x+\lambda y\Rightarrow V(x,y)=\frac{3}{2}kx^2+\frac{3}{2}ky^2+kxy-\lambda x+\lambda y$$

$$T=\begin{pmatrix} m & 0 \\ 0 & m \end{pmatrix} \quad \text{and} \quad V=\begin{pmatrix} 3k & k \\ k & 3k \end{pmatrix}$$

Secular equation is given by

$$\left|V-\omega^2 m\right|=0\Rightarrow\left(3k-\omega^2 m\right)^2-k^2=0\Rightarrow\omega_x=\sqrt{\frac{4k}{m}},\omega_y=\sqrt{\frac{2k}{m}}$$

The equivalent quantum mechanical energy is $E_{n_x,n_y}=\left(n_x+\frac{1}{2}\right)\hbar\omega_x+\left(n_y+\frac{1}{2}\right)\hbar\omega_y+V_0$

Where $n_x=0,1,2,3...$ and $n_y=0,1,2,3...$

The ground state energy $E_0=E_{0.0}=\frac{\hbar}{2}\sqrt{\frac{4k}{m}}+\frac{\hbar}{2}\sqrt{\frac{2k}{m}}$

The first excited state energy $E_1=E_{0.1}=\frac{\hbar}{2}\sqrt{\frac{4k}{m}}+\frac{3\hbar}{2}\sqrt{\frac{2k}{m}}$

$$E_1-E_0=\hbar\sqrt{\frac{2k}{m}}$$

Ans. 9: 3

Solution: $\langle H \rangle = \sum_{n=0}^{\infty} \frac{\left(n+\frac{1}{2}\right)\hbar\omega}{\lfloor n} = \frac{1}{2}\hbar\omega + \hbar\omega \sum_{n=1}^{\infty} \frac{n}{\lfloor n} = \left[\frac{1}{2}+e\right]\hbar\omega = 3.2\hbar\omega$

Ans. 10: (a)

Solution: $\langle \psi(x)|x|\psi(x)\rangle = 2c_0c_1\langle \phi_0|x|\phi_1\rangle \Rightarrow \left((c_0+c_1)^2-1\right)\langle \phi_0|x|\phi_1\rangle \qquad \left[\because\ c_0^2+c_1^2=1\right]$

So, for $\langle \psi(x)|x|\psi(x)\rangle$ to be maximized, $c_0 = c_1 = +1/\sqrt{2}$

---

9. Dirac Function

Q1. Consider a square well of depth $-V_0$ and width a with V_0 as fixed. Let $V_0 \to \infty$ and $a \to 0$. This potential well has

(a) No bound states
(b) 1 bound state
(c) 2 bound states
(d) Infinitely many bound states

JEST-2014

---

9. Dirac Function (Solution)

Ans. 1: (b)

Solution: It forms delta potential, so it has only one bound state.

---

10. 2D and 3D System

Q1. A simple model of a helium-like atom with electron-electron interaction is replaced by Hooke's law force is described by Hamiltonian

$$\frac{-\hbar^2}{2m}\left(\nabla_1^2+\nabla_2^2\right)+\frac{1}{2}m\omega^2\left(r_1^2+r_2^2\right)-\frac{\lambda}{4}\ m\omega^2\left|\vec{r}_1-\vec{r}_2\right|^2.$$

What is the exact ground state energy?

(a) $E=\frac{3}{2}\hbar\omega\left(1+\sqrt{1+\lambda}\right)$ (b) $E=\frac{3}{2}\hbar\omega\left(1+\sqrt{\lambda}\right)$

(c) $E=\frac{3}{2}\hbar\omega\sqrt{1-\lambda}$ (d) $E=\frac{3}{2}\hbar\omega\left(1+\sqrt{1-\lambda}\right)$

JEST-2013

Q2. Consider two coupled harmonic oscillators of mass m in each. The Hamiltonian describing the oscillators is

$$\hat{H}=\frac{\hat{p}_1^2}{2m}+\frac{\hat{p}_2^2}{2m}+\frac{1}{2}m\omega^2\left(\hat{x}_1^2+\hat{x}_2^2+\left(\hat{x}_1-\hat{x}_2\right)^2\right)$$

The eigenvalues of $\hat{H}$ are given by (with n_1 and n_2 being non-negative integers)

(a) $E_{n_1,n_2}=\hbar\omega\left(n_1+n_2+1\right)$ (b) $E_{n_1,n_2}=\hbar\omega\left(n_1+\frac{1}{2}\right)+\frac{1}{\sqrt{3}}\hbar\omega\left(n_2+\frac{1}{2}\right)$

(c) $E_{n_1,n_2}=\hbar\omega\left(n_1+\frac{1}{2}\right)+\sqrt{3}\hbar\omega\left(n_2+\frac{1}{2}\right)$ (d) $E_{n_1,n_2}=\frac{1}{\sqrt{3}}\hbar\omega\left(n_1+n_2+1\right)$

JEST-2018

Q3. Consider a quantum particle of mass m moving in a potential

$$V(x,y)=\begin{cases}\frac{1}{2}m\omega^2\left(x^2+y^2\right), & \text{for } x>0, y>0\\ \infty, & \text{otherwise}\end{cases}$$

what is the degeneracy of the energy state $9\hbar\omega$, where $\omega>0$ measures the strength of the potential?

(a) 4 (b) 2 (c) 10 (d) 5

JEST-2020

---

10. 2D and 3D System (Solution)

Ans. 1: (b)

Ans. 2: (c)

Solution: $V=\frac{1}{2}m\omega^2\left(\hat{x}_1^2+\hat{x}_2^2+\left(\hat{x}_1-\hat{x}_2\right)^2\right)=\frac{1}{2}m\omega^2\left(2\hat{x}_1^2+2\hat{x}_2^2-2\hat{x}_1\hat{x}_2\right)$

$$V=\frac{1}{2}k\left(2\hat{x}_1^2+2\hat{x}_2^2-2\hat{x}_1\hat{x}_2\right)$$

$$V=\begin{bmatrix}2k & -k\\ -k & 2k\end{bmatrix}\quad T=\begin{bmatrix}m & 0\\ 0 & m\end{bmatrix}$$

Secular equation is given by $\left|V-\omega_0^2T\right|=0$

$$V=\begin{bmatrix}2k-\omega_0^2m & -k\\ -k & 2k-\omega_0^2m\end{bmatrix}=0$$

$$\left(2k-\omega_0^2m\right)^2-k^2=0\Rightarrow\omega_0=\sqrt{\frac{k}{m}},\sqrt{\frac{3k}{m}},\Rightarrow\omega_0=\omega,\sqrt{3}\omega$$

Quantum mechanical energy is

$$E_{n_1,n_2}=\hbar\omega\left(n_1+\frac{1}{2}\right)+\sqrt{3}\hbar\omega\left(n_2+\frac{1}{2}\right)$$

Ans. 3: (a)

Solution: $V(x,y)=\begin{cases}\frac{1}{2}m\omega^2\left(x^2+y^2\right), & \text{for } x>0, y>0\\ \infty, & \text{otherwise}\end{cases}$

This is semiparabolic potential in x and y

So only odd at x_x odd at x_y will give

$\left(x_x,x_y\right)=(1,7)(7,1)(3,5)(5,3)$.

So option (a) is correct.

---

11. Angular Momentum

Q1. If J_x, J_y and J_z are angular momentum operators, the eigenvalues of the operator $\frac{(J_x + J_y)}{\hbar}$ are:

(a) real and discrete with rational spacing

(b) real and discrete with irrational spacing

(c) real and continuous

(d) not all real

JEST-2013

Q2. Consider the state $\begin{pmatrix} 1/2 \\ 1/2 \\ 1/\sqrt{2} \end{pmatrix}$ corresponding to the angular momentum $l = 1$ in the L_z basis of states with $m = +1, 0, -1$. If L_z^2 is measured in this state yielding a result 1, what is the state after the measurement?

(a) $\begin{pmatrix} 1 \\ 0 \\ 0 \end{pmatrix}$ (b) $\begin{pmatrix} 1/\sqrt{3} \\ 0 \\ \sqrt{2/3} \end{pmatrix}$ (c) $\begin{pmatrix} 0 \\ 0 \\ 1 \end{pmatrix}$ (d) $\begin{pmatrix} 1/\sqrt{2} \\ 0 \\ 1/\sqrt{2} \end{pmatrix}$

JEST-2013

Q3. Consider an eigenstate of $\vec{L}^2$ and L_z operator denoted by $|l, m\rangle$. Let $A = \hat{n} \cdot \vec{L}$ denote an operator, where $\hat{n}$ is a unit vector parametrized in terms of two angles as $(n_x, n_y, n_z) = (\sin\theta\cos\phi, \sin\theta\sin\phi, \cos\theta)$. The width ΔA in $|l, m\rangle$ state is:

(a) $\sqrt{\frac{l(l+1) - m^2}{2}}\hbar\cos\theta$ (b) $\sqrt{\frac{l(l+1) - m^2}{2}}\hbar\sin\theta$

(c) $\sqrt{l(l+1) - m^2}\hbar\sin\theta$ (d) $\sqrt{l(l+1) - m^2}\hbar\cos\theta$

JEST-2014

Q4. If $Y_{xy} = \frac{1}{\sqrt{2}}\left(Y_{2,2} - Y_{2,-2}\right)$ where $Y_{l,m}$ are spherical harmonics then which of the following is true?

(a) Y_{xy} is an eigenfunction of both L^2 and L_z

(b) Y_{xy} is an eigenfunction of L^2 but not L_z

(c) Y_{xy} is an eigenfunction both of L_z but not L^2

(d) Y_{xy} is not an eigenfunction of either L^2 and L_z

JEST-2016

Q5. The Hamiltonian of a quantum particle of mass m confined to a ring of unit radius is:

$$H = \frac{\hbar^2}{2m}\left(-i\frac{\partial}{\partial\theta} - \alpha\right)^2$$

where θ is the angular coordinate, α is a constant. The energy eigenvalues and eigenfunctions of the particle are (n is an integer):

(a) $\psi_n(\theta) = \frac{e^{in\theta}}{\sqrt{2\pi}}$ and $E_n = \frac{\hbar^2}{2m}(n-\alpha)^2$

(b) $\psi_n(\theta) = \frac{\sin(n\theta)}{\sqrt{2\pi}}$ and $E_n = \frac{\hbar^2}{2m}(n-\alpha)^2$

(c) $\psi_n(\theta) = \frac{\cos(n\theta)}{\sqrt{2\pi}}$ and $E_n = \frac{\hbar^2}{2m}(n-\alpha)^2$

(d) $\psi_n(\theta) = \frac{e^{in\theta}}{\sqrt{2\pi}}$ and $E_n = \frac{\hbar^2}{2m}(n+\alpha)^2$

JEST-2016

Q6. A quantum particle of mass m is moving on a horizontal circular path of radius a. The particle is prepared in a quantum state described by the wavefunction

$$\psi = \sqrt{\frac{4}{3\pi}}\cos^2\phi,$$

ϕ being the azimuthal angle. If a measurement of the z-component of orbital angular momentum of die particle is carried out, the possible outcomes and the corresponding probabilities are

(a) $L_z = 0, \pm\hbar, \pm 2\hbar$ with $0\, P(0) = \frac{1}{5}, P(\pm\hbar) = \frac{1}{5}$ and $P(\pm 2\hbar) = \frac{1}{5}$

(b) $L_z = 0$ with $P(0) = 1$

(c) $L_z = 0, \pm\hbar$ with $P(0) = \frac{1}{3}$ and $P(\pm\hbar) = \frac{1}{3}$

(d) $L_z = 0, \pm 2\hbar$ with $P(0) = \frac{2}{3}$ and $P(\pm 2\hbar) = \frac{1}{6}$

JEST-2018

Q7. A particle in a spherically symmetric potential is known to be in an eigenstate of $\vec{L}^2$ and L_2 with eigenvalues $l(l+1)\hbar^2$ and $m\hbar$, respectively. What is the value of $\left(l, m \middle| L_x^2 \middle| l, m\right)$?

(a) $\frac{\hbar^2}{2}\left(l^2 + l + m^2\right)$

(b) $\hbar^2\left(l^2 + l - m^2\right)$

(c) $\frac{\hbar^2}{2}\left(l^2 + l - m^2\right)$

(d) $\frac{\hbar^2}{2}\left(l^2 + l - m^2\right)$

JEST-2020

Q8. The wave function of a particle subjected to a spherically symmetric potential $V(r)$ is given by $\psi(\vec{r}) = (x - y + 2z)\, f(r)$. Which one of the following statements is true about $\psi(\vec{r})$?

(a) It is an eigenfunction of $\vec{L}^2$ with $l = 0$

(b) It is an eigenfunction of $\vec{L}^2$ with $l = 1$

(c) It is an eigenfunction of $\vec{L}^2$ with $l = 2$

(d) It is not an eigenfunction of $\vec{L}^2$

JEST-2020

---

11. Angular Momentum (Solution)

Ans. 1: (b)

Solution: $J_x = \frac{1}{2}(J_+ + J_-)$, $J_y = \frac{i}{2}(J_- - J_+) \Rightarrow J_+ = \hbar\begin{bmatrix} 0 & 1 \\ 0 & 0 \end{bmatrix}$, $J_- = \hbar\begin{bmatrix} 0 & 0 \\ 1 & 0 \end{bmatrix}$

$$J_x = \frac{\hbar}{2}\begin{bmatrix} 0 & 1 \\ 1 & 0 \end{bmatrix}, \quad J_y = \frac{i\hbar}{2}\begin{bmatrix} 0 & -1 \\ 1 & 0 \end{bmatrix} \Rightarrow \frac{J_x + J_y}{\hbar} = \frac{1}{2}\begin{bmatrix} 0 & 1-i \\ 1+i & 0 \end{bmatrix}$$

eigen value $\frac{1}{2}\begin{pmatrix} -\lambda & 1-i \\ 1+i & -\lambda \end{pmatrix} \Rightarrow \lambda^2 - 2 = 0 \Rightarrow \lambda = \pm\sqrt{2}$

Ans. 2: (d)

Solution: $L_z = \begin{pmatrix} 1 & 0 & 0 \\ 0 & 0 & 0 \\ 0 & 0 & -1 \end{pmatrix}$, $L_z^2 = \begin{pmatrix} 1 & 0 & 0 \\ 0 & 0 & 0 \\ 0 & 0 & 1 \end{pmatrix}$, eigenvector $\begin{pmatrix} 1 \\ 0 \\ 0 \end{pmatrix}, \begin{pmatrix} 0 \\ 1 \\ 0 \end{pmatrix}, \begin{pmatrix} 0 \\ 0 \\ 1 \end{pmatrix}$

Corresponding eigenvalue 1, 0, 1

Now state after measurement yielding $1 \Rightarrow |\phi_1\rangle + |\phi_3\rangle = \begin{pmatrix} 1 \\ 0 \\ 1 \end{pmatrix} = \frac{1}{\sqrt{2}}\begin{pmatrix} 1 \\ 0 \\ 1 \end{pmatrix}$

Ans. 3: (c)

Solution: $A = \hat{n} \cdot \vec{L} \Rightarrow A = L_x \cdot \frac{x}{r} + L_y \cdot \frac{y}{r} + L_z \cdot \frac{z}{r}$

$$\Rightarrow A = L_x \cdot \frac{r\sin\theta\cos\phi}{r} + L_y \cdot \frac{r\sin\theta \quad \sin\phi}{r} + L_z \cdot \frac{r\cos\theta}{r}$$

$$\Rightarrow A = L_x \sin\theta\cos\phi + L_y \sin\theta \cdot \sin\phi + L_z \cos\theta$$

Now $\Delta A = \sqrt{\langle A^2 \rangle - \langle A \rangle^2}$

$$\langle A \rangle = \langle L_x \rangle \sin\theta\cos\phi + \langle L_y \rangle \sin\theta\sin\phi + \langle L_z \rangle \cos\theta$$

$$\langle A \rangle = (m\hbar)\cos\theta \qquad \because \langle L_x \rangle = 0, \langle L_y \rangle = 0$$

$$\langle A^2 \rangle = \langle L_x^2 \rangle \sin^2\theta\cos^2\phi + \langle L_y^2 \rangle \sin^2\theta\sin^2\phi + \langle L_z^2 \rangle \cos^2\theta$$

$$= \left(\langle L_x^2 \rangle + \langle L_y^2 \rangle\right)\sin^2\theta + \langle L_z^2 \rangle \cos^2\theta$$

$$=\left(\left\langle L^2\right\rangle-\left\langle L_z^2\right\rangle\right)\sin^2\theta-\left\langle L_z^2\right\rangle\cos^2\theta$$

$$\Rightarrow\left\langle A^2\right\rangle=\left[l\left(l+1\right)-m^2\right]\hbar^2\sin^2\theta+m^2\hbar^2\cos^2\theta$$

$$\Rightarrow\left\langle A^2\right\rangle=\left[l\left(l+1\right)-m^2\right]\hbar^2\sin^2\theta+m^2\hbar^2\cos^2\theta$$

$$\Delta A=\sqrt{\left\langle A^2\right\rangle-\left\langle A\right\rangle^2}=\sqrt{\left(l\left(l+1\right)-m^2\right)\hbar^2\sin^2\theta+m^2\hbar^2\cos^2\theta-m^2\hbar^2\cos^2\theta}$$

$$\Delta A=\sqrt{\left[l\left(l+1\right)-m^2\right]}\hbar\sin\theta$$

Ans. 4: (b)

Solution: The $L^2Y_{xy}=l\left(l+1\right)\hbar^2Y_{xy}$, where $l=2$ and $L_zY_{xy}\neq mY_{xy}$

So, Y_{xy} is an eigenfunction of L^2 but not L_z

Ans. 5: (a)

Solution: $H=\dfrac{\hbar^2}{2m}\left(-i\dfrac{\partial}{\partial\theta}-\alpha\right)^2\Rightarrow\dfrac{\hbar^2}{2m}\left[-\dfrac{\partial^2\psi}{\partial\theta^2}+2i\alpha\dfrac{\partial\psi}{\partial\theta}+\alpha^2\psi\right]=E\psi$

By inspection, $\left|\psi_n\left(\theta\right)\right\rangle=\dfrac{e^{in\theta}}{\sqrt{2\pi}}$, which will also satisfy boundary condition $\left|\psi_n\left(\theta+2\pi\right)\right\rangle=\left|\psi_n\left(\theta\right)\right\rangle$ and satisfies the eigen value equation with eigen value $E=\dfrac{\hbar^2\left(n-\alpha\right)^2}{2m}$

Ans. 6: (d)

Solution: $\psi=\sqrt{\dfrac{4}{3\pi}}\cos^2\phi=\sqrt{\dfrac{4}{3\pi}}\left(\dfrac{1+\cos2\phi}{2}\right)\Rightarrow\psi=\sqrt{\dfrac{4}{3\pi}}.\dfrac{1}{2}\left[\dfrac{\sqrt{2\pi}}{\sqrt{2\pi}}+\dfrac{\sqrt{2\pi}}{\sqrt{2\pi}}\dfrac{\left(\exp2i\phi+\exp-2i\phi\right)}{2}\right]$

$$\psi=\sqrt{\frac{2}{3}}\left|0\right\rangle+\frac{1}{\sqrt{6}}\left|2\right\rangle+\frac{1}{\sqrt{6}}\left|-2\right\rangle$$

$L_z=0,\pm2\hbar$ with $P\left(0\right)=\dfrac{2}{3}$ and $P\left(\pm2\hbar\right)=\dfrac{1}{6}$

Ans. 7: (d)

Solution: $L_x^2 = \frac{\left(L_+ + L_-\right)^2}{4} = \frac{L_+^2 + L_-^2 + L_+L_- - L_-L_+}{4} = \frac{L_+^2 + L_-^2 + 2\left(L^2 - L_2^2\right)}{4}$

$$\left\langle L_1 m \middle| L_x^2 \middle| L_1 m \right\rangle = \frac{1}{4}\left[\left\langle L_+^2 \right\rangle + \left\langle L_-^2 \right\rangle + 2\left\langle L^2 \right\rangle + 2\left\langle L_2^2 \right\rangle\right]$$

$$= \frac{1}{4} \times 0 + 0 + \left(2L\left(L+1\right) - 2m^2\right)\hbar^2 = \left(L^2 - L - m^2\right)\frac{\hbar^2}{2}$$

Ans. 8: (b)

Solution: $\psi\left(r\right) = \left(x - y + 2z\right) f\left(r\right)$

$x = r\sin\theta\cos\omega$

$y = \sin\theta$ _____

$z = r\cos\theta$

$\psi\left(r, 0, \phi\right) = rf\left(r\right)\left[\sin\omega\left(\cos\omega - \sin\theta\right) + \cos\theta\right]$

$= rf\left(r\right)P_1\left(\cos\theta\right) f\left(\phi\right)$

$l = 1$

Eigen state with $l = 1$

---

12. Spin

Q1. Define $\sigma_x = \left(f^\dagger + f\right)$, and $\sigma_y = -i\left(f^\dagger - f\right)$, where the σ' are Pauli spin matrices and $f, f^\dagger$ obey anti-commutation relations $\{f, f\} = 0, \{f, f^\dagger\} = 1$. Then σ_z is given by

(a) $f^\dagger f - 1$ (b) $2f^\dagger f - 1$ (c) $2f^\dagger f + 1$ (d) $f^\dagger f$

JEST-2012

Q2. Consider a system of two spin-$\frac{1}{2}$ particles with total spin $S = S_1 + S_2$, where S_1 and S_2 are in terms of Pauli matrices σ_i. The spin triplet projection operator is

(a) $\frac{1}{4} + S_1 \cdot S_2$ (b) $\frac{3}{4} - S_1 \cdot S_2$ (c) $\frac{3}{4} + S_1 \cdot S_2$ (d) $\frac{1}{4} - S_1 \cdot S_2$

JEST-2012

Q3. Consider a spin-$\frac{1}{2}$ particle in the homogeneous magnetic field of magnitude B along z-axis which is prepared initially in a state $|\psi\rangle = \frac{1}{\sqrt{2}}\left(|\uparrow\rangle + |\downarrow\rangle\right)$ at time $t = 0$. At what time t will the particles be in the state $-|\psi\rangle$ (μ_B is Bohr magneton)?

(a) $t = \frac{\pi\hbar}{\mu_B B}$ (b) $t = \frac{2\pi\hbar}{\mu_B B}$ (c) $t = \frac{\pi\hbar}{2\mu_B B}$ (d) Never

JEST-2012

Q4. The ground state energy of 5 identical spin-$\frac{1}{2}$ particles which are subject to a one-dimensional simple harmonic oscillator potential of frequency ω is

(a) $\frac{15}{2}\hbar\omega$ (b) $\frac{13}{2}\hbar\omega$ (c) $\frac{1}{2}\hbar\omega$ (d) $5\hbar\omega$

JEST-2012

Q5. The spatial part of a two-electron state is symmetric under exchange. If $|\uparrow\rangle$ and $|\downarrow\rangle$ represent the spin-up and spin-down states respectively of each particle, the spin-part of the two-particle state is

(a) $|\uparrow\rangle|\downarrow\rangle$ (b) $|\downarrow\rangle|\uparrow\rangle$

(c) $\left(|\downarrow\rangle|\uparrow\rangle-|\uparrow\rangle|\downarrow\rangle\right)/\sqrt{2}$ (d) $\left(|\downarrow\rangle|\uparrow\rangle+|\uparrow\rangle|\downarrow\rangle\right)/\sqrt{2}$

JEST-2012

Q6. What are the eigenvalues of the operator $H=\vec{\sigma}\cdot\vec{a}$, where $\vec{\sigma}$ are the three Pauli matrices and $\vec{a}$ is a vector?

(a) a_x+a_y and a_z (b) $a_x+a_z\pm ia_y$ (c) $\pm\left(a_x+a_y+a_z\right)$ (d) $\pm|\vec{a}|$

JEST-2013

Q7. Suppose a spin $1/2$ particle is in the state

$$|\psi\rangle=\frac{1}{\sqrt{6}}\begin{bmatrix}1+i\\2\end{bmatrix}$$

If S_x (x component of the spin angular momentum operator) is measured what is the probability of getting $+\hbar/2$?

(a) $1/3$ (b) $2/3$ (c) $5/6$ (d) $1/6$

JEST-2014

Q8. A spin-$\frac{1}{2}$ particle in a uniform external magnetic field has energy eigenstates $|1\rangle$ and $|2\rangle$. The system is prepared in ket-state $\frac{\left(|1\rangle+|2\rangle\right)}{\sqrt{2}}$ at time $t=0$. It evolves to the state described by the ket $\frac{\left(|1\rangle-|2\rangle\right)}{\sqrt{2}}$ in time T. The minimum energy difference between two levels is:

(a) $\frac{h}{6T}$ (b) $\frac{h}{4T}$ (c) $\frac{h}{2T}$ (d) $\frac{h}{T}$

JEST-2016

Q9. A spin-1 particle is in a state $|\psi\rangle$ described by the column matrix $\frac{1}{\sqrt{10}}\begin{pmatrix} 2 \\ \sqrt{2} \\ 2i \end{pmatrix}$ in the S_z basis. What is the probability that a measurement of operator S_z will yield the result $\hbar$ for the state $S_x|\psi\rangle$?

(a) $\frac{1}{2}$ (b) $\frac{1}{3}$ (c) $\frac{1}{4}$ (d) $\frac{1}{6}$

JEST-2016

Q10. A spin $\frac{1}{2}$ particle is in a state $\frac{(|\uparrow\rangle+|\downarrow\rangle)}{\sqrt{2}}$ where $|\uparrow\rangle$ and $|\downarrow\rangle$ are the eigenstates of S_z operator. The expectation value of the spin angular momentum measured along x direction is:

(a) $\hbar$ (b) $-\hbar$ (c) 0 (d) $\frac{\hbar}{2}$

JEST-2016

Q11. Suppose the spin degrees of freedom of a 2- particle system can be described by a 21-dimensional Hilbert subspace. Which among the following could be the spin of one of the particles?

(a) $\frac{1}{2}$ (b) 3 (c) $\frac{3}{2}$ (d) 2

JEST-2017

Q12. Suppose the spin degree of freedom of two particles (nonzero rest mass and nonzero spin) is described completely by a Hilbert space of dimension twenty one. Which of the following could be the spin of one of the particles?

(a) 2 (b) $\frac{3}{2}$ (c) 1 (d) $\frac{1}{2}$

JEST-2018

Q13. For a spin $\frac{1}{2}$ particle placed in a magnetic field B, the Hamiltonian is $H = -\gamma B S_y = -\omega S_y$, where S_y is the y-component of the spin operator. The state of the system at time $t = 0$ is $|\psi(t=0)\rangle = |+\rangle$, where $S_z|\pm\rangle = \pm\frac{\hbar}{2}|\pm\rangle$. At a later time t, if S_z measured then what is the probability to get a value $-\frac{\hbar}{2}$?

(a) $\cos^2(\omega t)$ (b) $\sin^2(\omega t)$ (c) 0 (d) $\sin^2\left(\frac{\omega t}{2}\right)$

JEST-2019

---

12. Spin (Solution)

Ans. 1: (c)

Solution: $\sigma_x\sigma_y = i\sigma_z$

$$i\sigma_z = \sigma_x\sigma_y$$

$$\sigma_z = \frac{1}{i}\sigma_x\sigma_y = \frac{-i}{i}\left(f^\dagger + f\right)\left(f^\dagger - f\right) = -\left[\left(f^\dagger\right)^2 - f^\dagger f + ff^\dagger - f^2\right]$$

$$= -\left[-f^\dagger f + \left(1 - f^\dagger.\ \ f\right)\right] = -\left[1 - 2f^\dagger f\right] = 2f^\dagger f - 1$$

Ans. 2: (c)

Solution: $\Rightarrow S = S_1 + S_2 \qquad S^2 = S_1^2 + S_2^2 + 2S_1\cdot S_2$

$$S^2 = \left(\frac{3}{4} + \frac{3}{4} + 2.S_1\cdot S_2\right)\hbar^2 \qquad \left[\because S = 0,\ 1\right]$$

$$S^2 = 2\left[\frac{3}{4} + S_1\cdot S_2\right]\hbar^2 \text{ for Triplet projection operator}$$

$$s\left(s+1\right)\hbar^2 = 2\left[\frac{3}{4} + S_1\cdot S_2\right]\hbar^2 \qquad S = 1$$

$$1\left(1+1\right) = 2\left(\frac{3}{4} + S_1\cdot S_2\right) \qquad \Rightarrow \frac{3}{4} + S_1\cdot S_2 = I$$

Ans. 3: (a)

Solution: $\vec{E} = \mu_B\cdot B\,\hat{z}\ \ |\psi\rangle = \frac{1}{\sqrt{2}}\begin{pmatrix}1\\1\end{pmatrix}$

$$|\psi(x,t)\rangle = \frac{1}{\sqrt{2}}\begin{pmatrix}1\\1\end{pmatrix}e^{-\frac{iEt}{b}} \Rightarrow |\psi(x,t)\rangle = -|\psi\rangle$$

$$\frac{1}{\sqrt{2}}\begin{pmatrix}1\\1\end{pmatrix}e^{\frac{-i\mu_B Bt}{\hbar}} = \frac{-1}{\sqrt{2}}\begin{pmatrix}1\\1\end{pmatrix}$$

$$e^{\frac{-i\mu_B Bt}{\hbar}} = -1$$

$$\cos\left(\frac{\mu_B Bt}{\hbar}\right) = \cos\pi$$

$$\frac{\mu_B Bt}{\hbar} = \pi \Rightarrow t = \frac{\hbar\pi}{\mu_B B}$$

Ans. 4: (b)

Solution: Degeneracy $=2s+1=2\times\frac{1}{2}+1=2$

$$E_{ground}=2\times\frac{1}{2}\hbar\omega+2\times\frac{3}{2}\hbar\omega+1\times\frac{5}{2}\hbar\omega=\frac{13}{2}\hbar\omega$$

Ans. 5: (c)

Solution: Since, electrons are Fermions and Fermions have anti-symmetric wave function

$\because$ spatial part is symmetric then its spin part is antisymmetric to maintain antisymmtric wave function

$$\psi(x)=\frac{1}{\sqrt{2}}\left(|\downarrow\rangle|\uparrow\rangle-|\uparrow\rangle|\downarrow\rangle\right)$$

Ans. 6: (d)

Solution: $H=\vec{\sigma}\cdot\vec{a}=\left(\sigma_x.a_x+\sigma_y.a_y+\sigma_z.a_z\right)$

$$=\begin{pmatrix}0 & 1\\ 1 & 0\end{pmatrix}a_x+\begin{pmatrix}0 & -i\\ i & 0\end{pmatrix}a_y+\begin{pmatrix}1 & 0\\ 0 & -1\end{pmatrix}a_z=\begin{pmatrix}a_z & \left(a_x-ia_y\right)\\ \left(a_x+ia_y\right) & -a_z\end{pmatrix}$$

For eigen value,

$$\begin{pmatrix}\left(a_z-\lambda\right) & \left(a_x-ia_y\right)\\ \left(a_x+ia_y\right) & -\left(a_z+\lambda\right)\end{pmatrix}=0\Rightarrow-\left(a_z-\lambda\right)\left(a_z+\lambda\right)-\left(a_x-ia_y\right)\left(a_x+ia_y\right)=0$$

$$\Rightarrow-a_z^2+\lambda^2-a_x^2-a_y^2=0\Rightarrow\lambda^2=a_x^2+a_y^2+a_z^2\Rightarrow\lambda=\pm|\bar{a}|$$

Ans. 7: (c)

Solution: $S_x=\frac{\hbar}{2}\begin{bmatrix}0 & 1\\ 1 & 0\end{bmatrix}$ with eigenvalues $\pm\frac{\hbar}{2}$ and eigenvector corresponding to $\frac{\hbar}{2}$ is $\frac{1}{\sqrt{2}}\begin{pmatrix}1\\ 1\end{pmatrix}$

Now probability getting $+\frac{\hbar}{2}$

$$p\left(\frac{\hbar}{2}\right)=\frac{|\langle\phi|\psi\rangle|}{\langle\psi|\psi\rangle}=\frac{\left|\frac{1}{\sqrt{2}}\cdot\frac{1}{\sqrt{6}}\begin{bmatrix}1 & 1\end{bmatrix}\begin{bmatrix}1+i\\ 2\end{bmatrix}\right|^2}{\frac{1}{6}\begin{bmatrix}1-i & 2\end{bmatrix}\begin{bmatrix}1+i\\ 2\end{bmatrix}}=\frac{\frac{1}{12}|1+i+2|^2}{6\times\frac{1}{6}}=\frac{5}{6}$$

Ans. 8: (c)

Solution: $\left|\psi(t=0)\right\rangle = \frac{\left(\left|1\right\rangle+\left|2\right\rangle\right)}{\sqrt{2}} \Rightarrow \left|\psi(t=t)\right\rangle = \frac{\left(\left|1\right\rangle\left(-i\frac{E_1 t}{\hbar}\right)+\left|2\right\rangle\exp\left(-i\frac{E_2 t}{\hbar}\right)\right)}{\sqrt{2}}$

$$\left|\psi(t=t)\right\rangle = \left(-i\frac{E_1 t}{\hbar}\right)\frac{\left(\left|1\right\rangle+\left|2\right\rangle\exp\left(-i\frac{(E_2-E_1)t}{\hbar}\right)\right)}{\sqrt{2}}$$

$$\exp\left(-i\frac{(E_2-E_1)t}{\hbar}\right) = -1$$

$$\frac{(E_2-E_1)T}{\hbar} = \pi \Rightarrow (E_2-E_1) = \frac{\pi\hbar}{T} = \frac{h}{2T}$$

Ans. 9: (c)

Solution: $S_x = \frac{\hbar}{\sqrt{2}}\begin{pmatrix} 0 & 1 & 0 \\ 1 & 0 & 1 \\ 0 & 1 & 0 \end{pmatrix}$, $\left|\psi\right\rangle = \frac{1}{\sqrt{10}}\begin{pmatrix} 2 \\ \sqrt{2} \\ 2i \end{pmatrix}$

$$S_x\left|\psi\right\rangle = \frac{\sqrt{2}}{\sqrt{10}}\hbar\begin{pmatrix} 1 \\ 1+i \\ 1 \end{pmatrix}$$

$$S_z = \hbar\begin{pmatrix} 1 & 0 & 0 \\ 0 & 0 & 0 \\ 0 & 0 & -1 \end{pmatrix}$$

The eigen state corresponding to eigen value $\hbar$ of S_z is $\begin{pmatrix} 1 \\ 0 \\ 0 \end{pmatrix}$

$$\therefore \quad P(\hbar) = \frac{\left|\left(1\ 0\ 0\right)\frac{\sqrt{2}}{\sqrt{10}}\hbar\begin{pmatrix} 1 \\ 1+i \\ 1 \end{pmatrix}\right|^2}{\frac{2}{10}\hbar^2\left(1\ 1-i\ 1\right)\begin{pmatrix} 1 \\ 1+i \\ 1 \end{pmatrix}} = \frac{1}{4}$$

Ans. 10: (d)

Solution: $|\psi\rangle = \frac{\left(|\uparrow\rangle + |\downarrow\rangle\right)}{\sqrt{2}} = \begin{pmatrix} \frac{1}{\sqrt{2}} \\ \frac{1}{\sqrt{2}} \end{pmatrix}$, $S_x = \frac{\hbar}{2}\begin{pmatrix} 0 & 1 \\ 1 & 0 \end{pmatrix}$

$$\langle S_x \rangle = \begin{pmatrix} \frac{1}{\sqrt{2}} & \frac{1}{\sqrt{2}} \end{pmatrix} \frac{\hbar}{2}\begin{pmatrix} 0 & 1 \\ 1 & 0 \end{pmatrix}\begin{pmatrix} \frac{1}{\sqrt{2}} \\ \frac{1}{\sqrt{2}} \end{pmatrix} = \frac{\hbar}{2}$$

Ans. 11: (b)

Solution: Dimension of Hilbert space $= (2s_1 + 1) \otimes (2s_2 + 1) = 7 \times 3 = 21$

So, $s_1 = 3, s_2 = 1$

Ans. 12: (c)

Solution: $(2s_1 + 1) \otimes (2s_2 + 1) = 21 = 7 \times 3 \Rightarrow s_1 = 3, s_2 = 1$

Ans. 13: (d)

Solution: $H = -\gamma B S_y = -\omega S_y$ Eigen value is $\frac{-\omega\hbar}{2}, \frac{\omega\hbar}{2}$ with eigen vector $|\phi_1\rangle = \frac{1}{\sqrt{2}}\left[|+\rangle + |-\rangle\right]$

and $|\phi_2\rangle = \frac{1}{\sqrt{2}}\left[|+\rangle - |-\rangle\right]$ respectively.

$$|\psi(t=0)\rangle = |+\rangle \Rightarrow I|+\rangle \Rightarrow |\phi_1\rangle\langle\phi_1|+\rangle + |\phi_2\rangle\langle\phi_2|+\rangle = \frac{1}{\sqrt{2}}|\phi_1\rangle + \frac{1}{\sqrt{2}}|\phi_2\rangle$$

$$|\psi(t=t)\rangle = \frac{1}{\sqrt{2}}|\phi_1\rangle \exp\left(\frac{i\omega t}{2}\right) + \frac{1}{\sqrt{2}}|\phi_2\rangle \exp\left(-\frac{i\omega t}{2}\right)$$

If S_z is measured on $|\psi(t)\rangle$ then probability to find $-\frac{\hbar}{2}$ is

$$P\left(-\frac{\hbar}{2}\right) = \frac{\left|\langle -|\psi(t)\rangle\right|^2}{\langle\psi(t)|\psi(t)\rangle} = \frac{1}{4}\left|\left(\exp\left(\frac{i\omega t}{2}\right) - \exp\left(-\frac{i\omega t}{2}\right)\right)\right|^2 = \sin^2\frac{\omega t}{2}$$

---

13. Radial Wave Function

Q1. The wavefunction of a hydrogen atom is given by the following superposition of energy eigen functions $\psi_{nlm}(\vec{r})$ (n, l, m are the usual quantum numbers):

$$\psi(\vec{r}) = \frac{\sqrt{2}}{\sqrt{7}}\psi_{100}(\vec{r}) - \frac{3}{\sqrt{14}}\psi_{210}(\vec{r}) + \frac{1}{\sqrt{14}}\psi_{322}(\vec{r})$$

The ratio of expectation value of the energy to the ground state energy and the expectation value of L^2 are, respectively:

(a) $\frac{229}{504}$ and $\frac{12\hbar^2}{7}$ (b) $\frac{101}{504}$ and $\frac{12\hbar^2}{7}$

(c) $\frac{101}{504}$ and $\hbar^2$ (d) $\frac{229}{504}$ and $\hbar^2$

JEST-2016

Q2. In the ground state of hydrogen atom, the most probable distance of the electron from the nucleus, in units of Bohr radius a_0 is:

(a) $\frac{1}{2}$ (b) 1 (c) 2 (d) $\frac{3}{2}$

JEST-2016

---

13. Radial Wave Function (Solution)

Ans. 1: (a)

Solution: $\langle E \rangle = \frac{2}{7} \times \frac{E_0}{1} + \frac{9}{14} \times \frac{E_0}{4} + \frac{1}{14} \times \frac{E_0}{9} = \frac{229}{504} E_0$

$$\langle L^2 \rangle = \frac{2}{7} \times 0\hbar^2 + \frac{9}{14} \times 2\hbar^2 + \frac{1}{14} \times 6\hbar^2 = \frac{24}{14}\hbar^2 = \frac{12}{7}\hbar^2$$

Ans. 2: (d)

Solution: $\psi_{100} = \frac{1}{\sqrt{\pi a_0^3}} e^{\frac{-r}{a_0}}$

$$P = \psi^* \psi = \frac{1}{\pi a_0^3} e^{\frac{-r}{a_0}} \Rightarrow r_p = \frac{dP}{dr} = 0 \Rightarrow r_p = a_0$$

---

14. Non-degenerate Perturbation

Q1. Consider a spin $-\frac{1}{2}$ particle characterized by the Hamiltonian $H = \omega S_z$. Under a perturbation $H' = gS_x$, the second order correction to the ground state energy is given by,

(a) $-\frac{g^2}{4\omega}$ (b) $\frac{g^2}{4\omega}$ (c) $-\frac{g^2}{2\omega}$ (d) $\frac{g^2}{2\omega}$

JEST-2015

Q2. A particle of mass m is confined in a potential well given by $V(x) = 0$ for $\frac{-L}{2} < x < \frac{L}{2}$ $\frac{L}{2}$ and $V(x) = \infty$ elsewhere. A perturbing potential $H'(x) = ax$ has been applied to the system. Let the first and second order corrections to the ground state be $E_0^{(1)}$ and $E_0^{(2)}$, respectively. Which one of the following statements is correct?

(a) $E_0^{(1)} < 0$ and $E_0^{(2)} > 0$ (b) $E_0^{(1)} = 0$ and $E_0^{(2)} > 0$

(c) $E_0^{(1)} > 0$ and $E_0^{(2)} < 0$ (d) $E_0^{(1)} = 0$ and $E_0^{(2)} < 0$

JEST-2015

Q3. Consider a quantum particle of mass m in one dimension in an infinite potential well, i.e., $V(x) = 0$ for $\frac{-a}{2} < x < \frac{a}{2}$ and $V(x) = \infty$ for $|x| \geq \frac{a}{2}$. A small perturbation, $V'(x) = \frac{2 \in |x|}{a}$ is added. The change in the ground state energy to $O(\in)$ is:

(a) $\frac{\in}{2\pi^2}(\pi^2 - 4)$ (b) $\frac{\in}{2\pi^2}(\pi^2 + 4)$

(c) $\frac{\in \pi^2}{2}(\pi^2 + 4)$ (d) $\frac{\in \pi^2}{2}(\pi^2 - 4)$

JEST-2016

Q4. A particle is described by the following Hamiltonian

$$\hat{H} = \frac{\hat{p}^2}{2m} + \frac{1}{2}m\omega^2\hat{x}^2 + \lambda\hat{x}^4$$

where the quadratic term can be treated perturbatively. If ΔE_0 and ΔE_1 denote the energy correction of $O(\lambda)$ to the ground state and the first excited state respectively, what is the fraction $\Delta E_1 / \Delta E_0$?

JEST-2017

---

14. Non-degenerate Perturbation (Solution)

Ans. 1: (a)

Solution: $\because H = \omega s_z \quad and \quad s_z = \frac{\hbar}{2}\begin{bmatrix} 1 & 0 \\ 0 & -1 \end{bmatrix}$

$$\Rightarrow H = \frac{\omega\hbar}{2}\begin{pmatrix} 1 & 0 \\ 0 & -1 \end{pmatrix} \text{ and } H' = gs_x = \frac{g\hbar}{2}\begin{pmatrix} 1 & 0 \\ 0 & -1 \end{pmatrix}$$

Ground state energy is $-\frac{\omega\hbar}{2}$ with eigenvector $|\phi_1\rangle = \begin{pmatrix} 0 \\ 1 \end{pmatrix}$

and first excited state energy is $\frac{\omega\hbar}{2}$ with eigenvector $|\phi_2\rangle = \begin{pmatrix} 1 \\ 0 \end{pmatrix}$

Second order correction in ground state $E_1^2 = \sum_{m\neq 1} \frac{|\langle\phi_m|H'|\phi_1\rangle|^2}{E_1^0 - E_m^0} = \frac{|\langle\phi_m|H'|\phi_1\rangle|^2}{-\frac{\omega\hbar}{2} - \frac{\omega\hbar}{2}}$

$$\Rightarrow E_1^2 = \frac{g^2\hbar^2}{4}\frac{\left|\begin{pmatrix} 1 & 0 \end{pmatrix}\begin{pmatrix} 0 & 1 \\ 1 & 0 \end{pmatrix}\begin{pmatrix} 0 \\ 1 \end{pmatrix}\right|^2}{-\frac{2\omega\hbar}{2}} = -\frac{g^2\hbar^2}{4\omega\hbar} = -\frac{g^2}{4\omega}\hbar$$

Ans. 2: (d)

Solution: $V(x) = \begin{cases} 0 & -L/2 < x < +L/2 \\ \infty & elsewhere \end{cases}$ and $H'(x) = \alpha x$

For ground state $|\phi_0\rangle = \sqrt{\frac{2}{L}}\cos\frac{\pi x}{L}$

$$E_0^{(1)} = \frac{\langle\phi_0|H'|\phi_0\rangle}{\langle\phi_0|\phi_0\rangle} = \frac{2}{L}\alpha\int_{-L/2}^{L/2} x\cos^2\frac{\pi x}{L} = 0$$

$$E_0^{(2)} = \sum_{m\neq 0}\frac{|\langle\phi_m|H'|\phi_0\rangle|^2}{E_0^0 - E_m^0} \Rightarrow E_0^{(2)} < 0 \qquad \because E_0^0 < E_m^0$$

Ans. 3: (a)

Solution: $E_1^1 = \int_{-\frac{a}{2}}^{\frac{a}{2}} \phi_1^* V'(x)\phi_1 dx \Rightarrow \frac{2\in}{a}\int_{-\frac{a}{2}}^{\frac{a}{2}} |x|\frac{2}{a}\cos^2\frac{\pi x}{a}dx$

$$=\frac{2\in}{a}.2.\int_0^{\frac{a}{2}} x\,\frac{2}{a}\cos^2\frac{\pi x}{a}dx \Rightarrow \frac{4\in}{a^2}\int_0^{\frac{a}{2}} x\frac{2}{2}\left(\cos\frac{2\pi x}{a}+1\right)dx \Rightarrow \frac{4\in}{a^2}\int_0^{\frac{a}{2}} x\left(\cos\frac{2\pi x}{a}+1\right)dx$$

$$\Rightarrow \frac{4\in}{a^2}\int_0^{\frac{a}{2}} x\left(\cos\frac{2\pi x}{a}+1\right)dx = \frac{\in}{2\pi^2}\left(\pi^2-4\right)$$

Ans. 4: 5

Solution: $\hat{H}=\frac{\hat{P}^2}{2m}+\frac{1}{2}m\omega^2\hat{x}^2+\lambda\hat{x}^4$

Now, energy correction of $O(\lambda)$ to ground state is

$$\Delta E_0=\langle 0|\hat{x}^4|0\rangle=\left(\frac{\hbar}{2m\omega}\right)^2\langle 0|6n^2+6n+3|0\rangle=\left(\frac{\hbar}{2m\omega}\right)^2\times 3$$

And energy correction of $O(\lambda)$ to first excited state is

$$\Delta E_1=\langle 1|\hat{x}^4|1\rangle=\left(\frac{\hbar}{2m\omega}\right)^2\langle 1|6n^2+6n+3|1\rangle$$

$$=\left(\frac{\hbar}{2m\omega}\right)^2\times[6+6+3]=15\left(\frac{\hbar}{2m\omega}\right)^2.\text{ Hence, }\frac{\Delta E_1}{\Delta E_0}=\frac{15}{3}=5$$

---

17. Variational Method

Q1. A ball bounces off earth. You are asked to solve this quantum mechanically assuming the earth is an infinitely hard sphere. Consider surface of earth as the origin implying $V(0)=\propto$ and a linear potential elsewhere (i.e. $V(x)=-mgx$ for $x>0$). Which of the following wave functions is physically admissible for this problem (with $k>0$):

(a) $\psi = e^{-kx}/x$ (b) $\psi = xe^{-kx^2}$ (c) $\psi = -Axe^{kx}$ (d) $\psi = Ae^{-kx^2}$

JEST-2014

---

17. Variational Method (Solution)

Ans. 1: (b)

Solution: $\psi = xe^{-kx^2}$

For given potential, at $x = 0$ and $x = \infty$ wave function must vanish.

---

18. WKB

Q1. Consider a particle confined by a potential $V(x) = k|x|$, where k is a positive constant. The spectrum E_n of the system, within the WKB approximation is proportional to

(a) $\left(n+\frac{1}{2}\right)^{3/2}$ (b) $\left(n+\frac{1}{2}\right)^{2/3}$ (c) $\left(n+\frac{1}{2}\right)^{1/2}$ (d) $\left(n+\frac{1}{2}\right)^{4/3}$

JEST-2017

---

18. WKB (Solution)

Ans. 1: (b)

Solution: $V(x)=\begin{cases} kx & x>0 \\ -kx & x<0 \end{cases}$

$$\therefore \sqrt{2m}\int_0^b \sqrt{E-V(x)}dx=\left(n+\frac{1}{2}\right)\hbar\pi = 2\sqrt{2m}\int_0^{E/k}\sqrt{E-kx}dx = 2\sqrt{2m}\int_0^{E/k}\sqrt{E}\cdot\sqrt{1-\frac{k}{E}x}\,dx$$

$$=2\sqrt{2mE}\int_0^1\sqrt{1-t}\,\frac{E}{k}dt=\frac{2E}{k}\sqrt{2mE}\int_0^1\sqrt{1-t}\,dt=2E^{3/2}\frac{\sqrt{2m}}{k}\times\frac{2}{3}$$

$$=\left(n+\frac{1}{2}\right)\hbar\pi \Rightarrow E_n^{3/2}=\frac{3\hbar\pi k}{4\sqrt{2m}}\left(n+\frac{1}{2}\right)$$

$$E_n=\left[\frac{3\hbar\pi k}{4\sqrt{2m}}\left(n+\frac{1}{2}\right)\right]^{2/3}$$

---

21. Identical Particle

Q1. Two electrons are confined in a one dimensional box of length L. The one-electron states are given by $\psi_n(x)=\sqrt{\frac{2}{L}}\sin\left(\frac{n\pi x}{L}\right)$. What would be the ground state wave function $\psi(x_1,x_2)$ if both electrons are arranged to have the same spin state?

(a) $\psi(x_1,x_2)=\frac{1}{\sqrt{2}}\left[\frac{2}{L}\sin\left(\frac{\pi x_1}{L}\right)\sin\left(\frac{2\pi x_2}{L}\right)+\frac{2}{L}\sin\left(\frac{2\pi x_1}{L}\right)\sin\left(\frac{\pi x_2}{L}\right)\right]$

(b) $\psi(x_1,x_2)=\frac{1}{\sqrt{2}}\left[\frac{2}{L}\sin\left(\frac{\pi x_1}{L}\right)\sin\left(\frac{2\pi x_2}{L}\right)-\frac{2}{L}\sin\left(\frac{2\pi x_1}{L}\right)\sin\left(\frac{\pi x_2}{L}\right)\right]$

(c) $\psi(x_1,x_2)=\frac{2}{L}\sin\left(\frac{\pi x_1}{L}\right)\sin\left(\frac{2\pi x_2}{L}\right)$

(d) $\psi(x_1,x_2)=\frac{2}{L}\sin\left(\frac{2\pi x_1}{L}\right)\sin\left(\frac{\pi x_2}{L}\right)$

JEST-2013

Q2. The lowest quantum mechanical energy of a particle confined in a one-dimensional box of size L is $2eV$. The energy of the quantum mechanical ground state for a system of three non-interacting spin $\frac{1}{2}$ particles is

(a) $6eV$ (b) $10eV$ (c) $12eV$ (d) $16eV$

JEST-2014

Q3. Consider a system of 15 non-interacting spin-polarized electrons. They are trapped in a two dimensional isotropic harmonic oscillator potential $V(x,y)=\frac{1}{2}m\omega^2(x^2+y^2)$. The angular frequency ω is such that $\hbar\omega=1$ in some chosen unit. What is the ground state energy of the system in the same units?

JEST-2019

---

21. Identical Particle (Solution)

Ans. 1: (b)

Solution: Electrons are Fermions of spin $\frac{1}{2}$ and its wave functions are anti-symmetric

Since, spin part is symmetric, therefore, space part will be anti-symmetric (since as total wave function is anti-symmetric)

Then,

$$\psi\left(x_1, x_2\right)=\frac{1}{\sqrt{2}}\left[\frac{2}{L}\sin\left(\frac{\pi x_1}{L}\right).\sin\left(\frac{2\pi x_2}{L}\right)-\frac{2}{L}\sin\left(\frac{2\pi x_1}{L}\right).\sin\left(\frac{\pi x_2}{L}\right)\right]$$

Ans. 2: (c)

Solution: $E_1=\frac{\pi^2\hbar^2}{2ml^2}=2eV$, $E_2=4E_1=8\ eV$

Spin, spin is $\frac{1}{2}$, therefore, degeneracy $g_i=\ 2S+1=2\times\frac{1}{2}+1=2$

$\Rightarrow$ ground state energy $=2\times 2\ eV+1\times 8eV=12\ eV$

Ans. 3: 55

Solution: Non-interacting spin-polarized electrons means direction of spin is fixed

$1\times\hbar\omega+2\times 2\hbar\omega+3\times 3\hbar\omega+4\times 4\hbar\omega+5\times 5\hbar\omega=55\hbar\omega$

Practice Set – Thermodynamics and Statistical Mechanics

JEST Previous Year Question

(2012 To 2020)

S.NO	Topic	Number of Question
1.	Kinetic Theory of Gases	12
2.	Law of Thermodynamics	10
3.	Entropy	03
4.	Micro Canonical	02
5.	Canonical Transform	19
6.	Grand Canonical	02
7.	Identical Particle	04
8.	Thermodynamics Relation	02
9.	Blackbody Radiation	02
10.	Probability Distribution	03
11.	Maxwell Boltzmann	01
12.	Other	03
Total Number of Questions		63

1. Kinetic Theory of Gases

Q1. A monatomic ideal gas at 170^0C is adiabatically compressed to $1/8$ of its original volume. The temperature after compression is

(a) 2.1^0C (b) 17^0C (c) -200.5^0C (d) 887^0C

JEST-2012

Q2. For which gas the ratio of specific heats (C_p/C_v) will be the largest?

(a) mono-atomic (b) di-atomic (c) tri-atomic (d) hexa-atomic

JEST-2014

Q3. An ideal gas is compressed adiabatically from an initial volume V to a final volume αV and a work W is done on the system in doing so. The final pressure of the gas will be $\left(\gamma = \frac{C_P}{C_V}\right)$

(a) $\frac{W}{V^\gamma}\frac{1-\gamma}{\alpha-\alpha^\gamma}$ (b) $\frac{W}{V^\gamma}\frac{\gamma-1}{\alpha-\alpha^\gamma}$ (c) $\frac{W}{V}\frac{1-\gamma}{\alpha-\alpha^\gamma}$ (d) $\frac{W}{V}\frac{\gamma-1}{\alpha-\alpha^\gamma}$

JEST-2015

Q4. Electrons of mass m in a thin, long wire at a temperature T follow a one-dimensional Maxwellian velocity distribution. The most probable speed of these electrons is,

(a) $\sqrt{\left(\frac{kT}{2\pi m}\right)}$ (b) $\sqrt{\left(\frac{2kT}{m}\right)}$ (c) 0 (d) $\sqrt{\left(\frac{8kT}{\pi m}\right)}$.

JEST-2015

Q5. An ideal gas has a specific heat ratio $\frac{C_P}{C_V} = 2$. Starting at a temperature T_1 the gas under goes an isothermal compression to increase its density by a factor of two. After this an adiabatic compression increases its pressure by a factor of two. The temperature of the gas at the end of the second process would be:

(a) $\frac{T_1}{2}$ (b) $\sqrt{2}T_1$ (c) $2T_1$ (d) $\frac{T_1}{\sqrt{2}}$

JEST-2016

Q6. After the detonation of an atom bomb, the spherical ball of gas was found to be of 15 meter radius at a temperature of $3\times10^5 K$. Given the adiabatic expansion coefficient $\gamma = 5/3$, what will be the radius of the ball when its temperature reduces to $3\times10^3 K$?

(a) $156\,m$ (b) $50\,m$ (c) $150\,m$ (d) $100\,m$

JEST-2017

Q7. In a thermodynamic process the volume of one mole of an ideal is varied as where $V = aT^{-1}$ a is a constant. The adiabatic exponent of the gas is γ. What is the amount of heat received by the gas if the temperature of the gas increases by ΔT in the process?

(a) $R\Delta T$ (b) $\frac{R\Delta T}{1-\gamma}$ (c) $\frac{R\Delta T}{2-\gamma}$ (d) $R\Delta T\frac{2-\gamma}{\gamma-1}$

JEST-2018

Q8. For a classical system of non-interacting particles in the presence of a spherically symmetric potential $V(r) = \gamma r^3$, what is the mean energy per particle? γ is a constant.

(a) $\frac{3}{2}k_BT$ (b) $\frac{5}{2}k_BT$ (c) $\frac{3}{2}\gamma k_BT$ (d) $\frac{3}{2}\gamma k_BT$

JEST-2018

Q9. A frictionless heat conducting piston of negligible mass and heat capacity divides a vertical, insulated cylinder of height $2H$ and cross sectional area A into two halves. Each half contains one mole of an ideal gas at temperature T_0 and pressure P_0 corresponding to STP. The heat capacity ratio $\gamma = C_p/C_v$ is given. A load of weight W is tied to the piston and suddenly released. After the system comes to equilibrium, the piston is at rest and the temperatures of the gases in the two compartments are equal. What is the final displacement y of the piston from its initial position, assuming $yW >> T_0C_v$?

(a) $\frac{2H}{\sqrt{\gamma}}$ (b) $H\gamma$ (c) $\frac{H}{\sqrt{\gamma}}$ (d) $\frac{2H}{\gamma}$

JEST-2018

Q10. In an experiment, certain quantity of an ideal gas at temperature T_0 pressure P_0 and volume V_0 is heated by a current flowing through a Wire for a duration of t seconds. The volume is kept constant and the pressure changes to P_1. If the experiment is performed at constant pressure starting with the same initial conditions, the volume changes from V_0 to V_1. The ratio of the specific heats at constant pressure and constant volume is

(a) $\frac{P_1 - P_0}{V_1 - V_0}\frac{V_0}{P_0}$ (b) $\frac{P_1 - P_0}{V_1 - V_0}\frac{V_1}{P_1}$ (c) $\frac{P_1 V_1}{P_0 V_0}$ (d) $\frac{P_0 V_0}{P_1 V_1}$

JEST-2018

Q11. A diatomic ideal gas at room temperature, is expanded at a constant pressure P_0. If the heat absorbed by the gas is $Q = 14$ Joules, what is the maximum work in Joules that can be extracted from the system?

JEST-2019

Q12. Consider a cube (see figure) of volume V containing N molecules each of mass m with uniform density $n = \frac{N}{V}$. Suppose this system is equivalent to a system of M non-interacting gases such that molecules of the ith gas are $N_i = n_i V$ in number, each with an identical y-component of velocity v_i. What is the pressure P on the surface $\square ABCD$ of area A?

(a) $P = m\sum_{i=1}^{M} n_i v_i^2$ (b) $P = \frac{m\sum_{i=1}^{M} n_i v_i^2}{\sum_{i=1}^{M} n_i}$

(c) $P = \frac{m\sum_{i=1}^{M} n_i v_i^2}{2}$ (d) $P = 2m\sum_{i=1}^{M} n_i v_i^2$

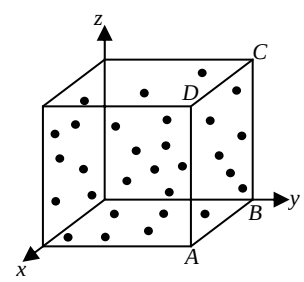

JEST-2020

---

1. Kinetic Theory of Gases (Solution)

Ans. 1: (d)

Solution: $PV^{\gamma} = \text{costant}, PV = RT$

$$\frac{TV^{\gamma}}{V} = \text{costant}$$

$$\Rightarrow TV^{\gamma-1} = \text{costant}$$

$$\Rightarrow T_1V_1^{\gamma-1} = T_2V_2^{\gamma-1} \Rightarrow T_2 = T_1\left(\frac{V_1}{V_2}\right)^{x} \Rightarrow 443(8)^{\frac{5}{3}-1} = 443\times(8)^{2/3} = 443\times 4$$

Temperature in $^0C = 1772 - 273 = 1499$

$\therefore$ Most appropriate answer is option (d)

Ans. 2: (a)

Solution: $\frac{C_P}{C_V} = \gamma = \left(1+\frac{2}{f}\right)$, where f is degree of freedom.

For monoatomic: $f = 3$, For diatomic: $f = 6$, For Triatomic: $f = 9$

For hexaatomic: $f = 18$

Ans. 3: (c)

Solution: Work done in adiabatic process,

$$W = \frac{P_2V_2 - P_1V_1}{1-\gamma}$$

$$\because \quad P_2V_2^{\gamma} = P_1V_1^{\gamma} \Rightarrow P_1 = P_2\left(\frac{V_2}{V_1}\right)^{\gamma} \Rightarrow P_1 = P_2(\alpha)^{\gamma}$$

$$W = \frac{P_2\alpha V - P_2\alpha^{\gamma}V}{(1-\gamma)} \Rightarrow P_2 = \frac{W}{V}\frac{(1-\gamma)}{(\alpha-\alpha^{\gamma})}$$

Ans. 4: (c)

Solution: $f(v_x) = \left(\frac{m}{2\pi kT}\right)^{1/2} e^{-\frac{mv_x^2}{2kT}} dv_x; \quad -\infty < v_x < \infty$

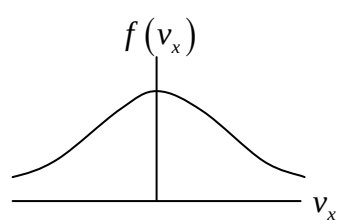

Most probable speed $v_x = 0$

Ans. 5: (b)

Solution: During the isothermal process, $T = T_1$ is constant

Let us assume, the adiabatic process started at point $A\left(P_1,T_1\right)$ and at point B the coordinate is $\left(P_2,T_2\right)$, it is given $P_1^{1-\gamma}T_1^{\gamma}=P_2^{1-\gamma}T_2^{\gamma}\Rightarrow T_2=\left(\frac{P_1}{P_2}\right)^{\frac{1-\gamma}{\gamma}}T_1\Rightarrow T_2=\left(\frac{P_1}{2P_1}\right)^{\frac{1-2}{2}}T_1$

$\Rightarrow T_2=\sqrt{2}T_1$

Ans. 6: (c)

Solution: $T_1V_1^{\gamma-1}=T_2V_2^{\gamma-1}\Rightarrow V_2=\left(\frac{T_1}{T_2}\right)^{\frac{1}{(\gamma-1)}}V_1\Rightarrow V_2=\left(\frac{T_1}{T_2}\right)^{3/2}V_1$

$$\Rightarrow R=\left(\frac{T_1}{T_2}\right)^{\frac{1}{2}}V_1\Rightarrow R=\left(\frac{3\times10^5}{3\times10^3}\right)^{\frac{1}{2}}15=150$$

Ans. 7: (d)

Solution: $V=\frac{a}{T}\Rightarrow dU=-\frac{a}{T_2}dT$

$$PV=RT$$

$$W=\int PdV=\int\frac{RT}{V}dV\Rightarrow W=\int\frac{RT^2}{a}\times\left(-\frac{a}{T^2}\right)dT\Rightarrow W=-\int RdT=-R\Delta T$$

$$\Delta U=C_V\Delta T=\frac{R}{\gamma-1}\Delta T$$

$$Q=W+\Delta U=\frac{R\Delta T}{\gamma-1}-R\Delta T=R\Delta T\left(\frac{1}{\gamma-1}-1\right)=R\Delta T\left(\frac{2-\gamma}{\gamma-1}\right)$$

Ans. 8: (b)

Solution: $\langle V\rangle=\int e^{-\frac{\gamma r^3}{k_BT}}4\pi r^2dr$

$$=\frac{\int_0^\infty vr^3e^{-\frac{\gamma r^3}{k_BT}}4\pi r^2dr}{\int_0^\infty e^{-\frac{\gamma r^3}{k_BT}}4\pi r^2dr}=\frac{\gamma\int_0^\infty r^5e^{-\frac{\gamma r^3}{k_BT}}dr}{\int_0^\infty r^2e^{-\frac{\gamma r^3}{k_BT}}dr}$$ put $u=r^3$ and solve the integral

$$=\frac{\gamma\frac{1}{3a^2}}{\frac{1}{3a}}=\frac{\gamma}{a}=\frac{\gamma}{\gamma}\cdot k_BT=k_BT$$

Put $u=r^3$ or $r=u^{1/3}$

$$\int_0^\infty u^{5/3}e^{-au}\frac{1}{3}u^{-2/3}dudr = \frac{1}{3}x^{\frac{1}{3}-1} \Rightarrow \frac{1}{3}\int_0^\infty ue^{-au}du$$

$$dr = \frac{1}{3}u^{-2/3}du = \frac{3}{2}k_BT + k_BT = \frac{5}{2}k_BT$$

Ans. 9: (c)

Solution: $\frac{P_0V_0}{T_0} = \frac{P_2V_2}{T_2}$

$$\frac{P_0A\times H}{T_0} = \frac{P_2\left(A\left(H-y\right)\right)}{T_2}$$

$$P_x = \frac{T_2\times P_0H}{T_0\left(H-y\right)} \qquad \text{....(i)}$$

$$\Rightarrow \frac{P_0A\times H}{T_0} = P_1\frac{A\left(H+y\right)}{T_2}P_1 = \frac{T_2}{T_0}\times\frac{P_0H}{\left(H+y\right)} \qquad \text{....(ii)}$$

Total change in internal energy of the system = Net energy input = wy

$$2xC_V\left(T_2-T_0\right) = wy$$

As $wy >> C_VT_0$ and $n=1$ mole

$$T_2 = \frac{wy}{2C_V} \qquad \text{(A)}$$

$$C_V = \frac{R}{\gamma-1}$$

Also as equilibrium, $P_2 - P_1 = \frac{w}{A}$

Put the value of T_2 in (i) and (A) and substitute (ii) from (i)

$$\frac{wy}{2C_V}\frac{P_0H}{T_0\left(H-y\right)} - \frac{wy}{2C_V}\frac{P_0H}{T_0\left(H+y\right)} = \frac{w}{A}$$

$$\frac{HP_0y}{2C_VT_0}\left(\frac{1}{H-y} - \frac{1}{H+y}\right) = \frac{1}{A}$$

$$\frac{A\times H\times P_0y}{2\times\frac{R}{\gamma-1}T_0}\left[\frac{Hy-H+y}{H^2-y^2}\right] = 1AH = V_0$$

$$\frac{P_0V_0}{T_0}\times\frac{y}{2R}\times\frac{2y\times\gamma^{-1}}{\left[H^2-y^2\right]}=1\Rightarrow\frac{R\times y^2\times\gamma^{-1}}{R\left(H^2-y^2\right)}=1$$

$$y^2\gamma-y^2=H^2-y^2\Rightarrow y=\sqrt{\frac{H}{\gamma}}$$

Ans. 10: (a)

Solution: (I) Constant volume heating

$$\frac{P_0}{T_0}=\frac{P_1}{T_1}\Rightarrow T_1=\frac{P_1}{P_0}T_0$$

$$Q=C_V\left(T_1-T_0\right)=C_V\left(\frac{P_1}{P_0}-1\right)T_0$$

(II) Constant pressure heating

$$\frac{V_0}{T_0}=\frac{V_1}{T_1}\Rightarrow T_1'=\frac{V_1}{V_0}T_0$$

$$Q'=C_P\left(T_1'-T_0\right)=C_PT_0\left(\frac{V_1}{V_0}-1\right)$$

$$PdV+VdP=RdT$$

$$PdV=RdT$$

$$dT_P=\frac{P}{R}dV=\frac{P_0}{R}\times\left(V_1-V_0\right)$$

$$dT_V=\frac{V}{R}dP=\frac{V_0}{R}\left(P_1-P_0\right)$$

$$C_V\times\frac{V_0}{R}\left(P_1-P_0\right)=C_P\times\frac{P_0}{R}\left(V_1-V_0\right)$$

$$\frac{C_P}{C_V}=\frac{V_0\left(P_1-P_0\right)}{P_0\left(V_1-V_0\right)}=\left(\frac{P_1-P_0}{V_1-V_0}\right)\times\frac{V_0}{P_0}$$

Ans. 11: 4

Solution: Diatomic gas has $C_v=\frac{5}{2}R,\ C_p=\frac{7}{2}R$

$$Q=C_p\Delta T\Rightarrow 14=\frac{7}{2}R\Delta T$$

(Constant pressure process)

$$\Rightarrow \Delta T = \frac{14\times 2}{7\times 8.314} = 0.481\,^{0}c \text{ and } \Delta U = C_v \Delta T = \frac{5}{2} R \times \Delta T$$

$$= \frac{5}{2}\times 8.314 \times 0.481 = 9.99\,J \text{ and } W_{\max} = Q - \Delta U$$

$$W_{\max} = 14 - 9.99 = 4\,J$$

Ans. 12: (a)

Solution: $P = \frac{1}{3} mn \sum_i v_{iy}^2 = \frac{1}{3} m \sum_i \frac{N_i v_{iy}^2}{V}$

$$P = m \sum_{i=1}^{M} n_i v_i^2$$

First Law Thermodynamics

Q1. For a diatomic ideal gas near room temperature, what fraction of the heat supplied is available for external work if the gas is expanded at constant pressure?

(a) $\frac{1}{7}$ (b) $\frac{5}{7}$ (c) $\frac{3}{4}$ (d) $\frac{2}{7}$

JEST-2013

Q2. A metal bullet comes to rest after hitting its target with a velocity of $80\,m/s$. If 50% of the heat generated remains in the bullet, what is the increase in its temperature? (The specific heat of the bullet $=160\ Joule/kg/^0C$)

(a) $14^0\,C$ (b) $12.5^0\,C$ (c) $10^0\,C$ (d) $8.2^0\,C$

JEST-2013

Q3. Ice of density ρ_1 melts at pressure P and absolute temperature T to form water of density ρ_2. The latent heat of melting of 1 gram of ice is L. What is the change in the internal energy ΔU resulting from the melting of 1 gram of ice?

(a) $L+P\left(\frac{1}{\rho_2}-\frac{1}{\rho_1}\right)$ (b) $L-P\left(\frac{1}{\rho_2}-\frac{1}{\rho_1}\right)$

(c) $L-P\left(\frac{1}{\rho_1}-\frac{1}{\rho_2}\right)$ (d) $L+P\left(\frac{1}{\rho_1}-\frac{1}{\rho_2}\right)$

JEST-2014

Q4. What is the contribution of the conduction electrons in the molar entropy of a metal with electronic coefficient of specific heat?

(a) γT (b) γT^2 (c) γT^3 (d) γT^4

JEST-2014

Q5. An ideal fluid is subjected to a thermodynamic process described by $\rho = CV^{-\alpha}$ and $P = n\rho^{\Gamma}$ where ρ is energy density and P is pressure. For what values of n and Γ the process is adiabatic if the volume is changed slowly?

(a) $\Gamma=\alpha-1, n=1$ (b) $\Gamma=1-\alpha, n=\alpha$

(c) $\Gamma=1, n=\alpha-1$ (d) $\Gamma=\alpha, n=1-\alpha$

JEST-2018

Q6. A theoretical model for a real (non-ideal) gas gives the following expressions for the internal energy (U) and the pressure (P),

$$U(T,V) = aV^{-2/3} + bV^{2/3}T^2 \text{ and } P(T,V) = \frac{2}{3}aV^{-5/3} + \frac{2}{3}bV^{-1/3}T^2$$

where a and b are constants. Let V_0 and T_0 be the initial volume and initial temperature respectively. If the gas expands adiabatically, the volume of the gas is proportional to

(a) T (b) $T^{3/2}$ (c) $T^{-3/2}$ (d) T^{-2}

JEST-2018

Q7. A rod consists of two equal sections of length l each with coefficient of thermal conductivity κ_1 and κ_2, respectively. One end of the rod is kept at a fixed temperature T_1 and the other end at a temperature $T_2\,(T_1 > T_2)$. If $\kappa_2 = 2\kappa_1$ then the temperature at the interface is

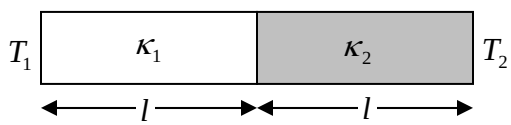

(a) $T = \frac{(2T_1 - T_2)}{3}$ (b) $T = \frac{(2T_1 + T_2)}{3}$

(c) $T = \frac{(T_1 + 2T_2)}{3}$ (d) $T = \frac{(T_1 - 2T_2)}{3}$

JEST-2020

Second Law Thermodynamics

Q8. Efficiency of a perfectly reversible (Carnot) heat engine operating between absolute temperature T and zero is equal to

(a) 0 (b) 0.5 (c) 0.75 (d) 1

JEST-2012

Q9. The entropy-temperature diagram of two Carnot engines, A and B, are shown in the figure 4. The efficiencies of the engines are η_A and η_B respectively. Which one of the following equalities is correct?

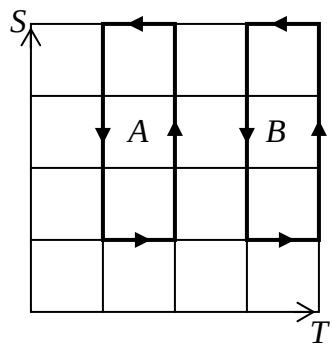

(a) $\eta_A = \frac{\eta_B}{2}$

(b) $\eta_A = \eta_B$

(c) $\eta_A = 3\eta_B$

(d) $\eta_A = 2\eta_B$

JEST-2015

Q10. Consider an ideal gas whose entropy is given by

$$S = \frac{n}{2}\left[\sigma + 5R\ln\frac{U}{n} + 2R\ln\frac{V}{n}\right],$$

where n is the number of moles, σ is a constant, R is the universal gas constant, U is the internal energy and V is the volume of the gas. The specific heat at constant pressure is then given by

(a) $\frac{5}{2}nR$ (b) $\frac{7}{2}nR$ (c) $\frac{3}{2}nR$ (d) nR

JEST-2020

(Solution)

First Law Thermodynamics

Ans. 1: (d)

Solution: It is isobaric process (constant pressure). Then $\delta Q = nC_p \Delta T \Rightarrow \Delta W = nR\Delta T$

In this process δQ is heat exchange during process.

Function of heat supplied

$$= \frac{\delta W}{\Delta Q} = \frac{nR\Delta T}{nC_p \Delta T} = \frac{R}{R\frac{\gamma}{\gamma-1}} = \frac{\gamma-1}{\gamma} = 1-\frac{1}{\gamma}$$

$$= 1-\frac{1}{\left(1+\frac{2}{f}\right)} \qquad \left[\because \quad \gamma = \frac{C_p}{C_V} \Rightarrow C_p = \frac{\gamma R}{\gamma-1}\right]$$

$$= 1-\frac{f}{f+2} \qquad [\, f = \text{ degree of freedom, for diatomic molecule } f = 5\,]$$

$$\Rightarrow 1-\frac{5}{5+2} = \frac{2}{7}$$

Ans. 2: (c)

Solution: Conservation of momentum 50% of $\frac{1}{2}mv^2 = mc\Delta T \Rightarrow \frac{1}{2}\frac{80\times 80}{2} = 160 \quad \Delta T$

$$\Rightarrow \Delta T = \frac{80\times 80}{4}\times\frac{1}{160} = 10^0 C$$

Ans. 3: (d)

Solution: $dU = dQ - \delta W = dQ - PdV$

$$dU = mL - PdV \Rightarrow dU = L - P\int_{\rho_1}^{\rho_2}\left(-\frac{1}{\rho^2}\right)d\rho = L + P\left[\frac{1}{\rho_1}-\frac{1}{\rho_2}\right]$$

$$\because \quad V = \frac{1}{\rho} \Rightarrow dV = -\frac{1}{\rho^2}d\rho$$

Ans. 4: (a)

Solution: $C_V = BT^3 + AT$

Ans. 5: (c)

Solution: As $\rho = \frac{U}{V} \Rightarrow U = \rho V = CV^{1-\alpha}$

$$\rho = n\rho^{\Gamma} \Rightarrow \rho = n\left(CV^{-\alpha}\right)^{\Gamma} = ne^{\Gamma}\left(V^{-\alpha}\right)^{\Gamma}$$

$$TdS = dU + PdV$$

$TdS = 0$, hence $dU + PdV = 0$

$$dU = C\left(1-\alpha\right)V^{-\alpha}dV$$

$$PdV = ne^{\Gamma}V^{-\alpha\Gamma}dV \Rightarrow C\left(1-\alpha\right)V^{-\alpha}dV + ne^{\Gamma}V^{-\alpha\Gamma}dV = 0$$

$$\Rightarrow CV^{-\alpha}\left(1-\alpha+V\left(1-\Gamma\right)ne^{\Gamma-1}\right)dV = 0$$

This is true only if $\Gamma = 1$ and for $\Gamma = 1$, $1-\alpha+n = 0$

$\Rightarrow n = \alpha - 1$. Therefore, correct option is (c).

Ans. 6: (c)

Solution: $U\left(T,V\right) = aV^{-2/3} + bV^{2/3}T^{2}$ and $P\left(T,V\right) = \frac{2}{3}aV^{-5/3} + \frac{2}{3}bV^{-1/3}T^{2}$

$$TdS = dU + PdV$$

$$dU = -PdV \qquad \left(ds = 0\right)$$

$$dU = \frac{\partial U}{\partial T}dT + \frac{\partial U}{\partial V}dV = -\left[\frac{2}{3}aV^{-5/3} + \frac{2}{3}bV^{-1/3}T^{2}\right]dV$$

$$= 2bV^{2/3}TdT\,\frac{2}{3}aV^{-\frac{2}{3}-1}dV + \frac{2}{3}bV^{-1/3}T^{2}dV = -\frac{2}{3}aV^{-5/3}dV - \frac{2}{3}bV^{-1/3}T^{2}dV$$

$$2bV^{2/3}\frac{T}{T^{2}}dT + \frac{2}{3}bV^{-1/3}T^{2}dV = -\frac{2}{3}bV^{-1/3}T^{2}dV$$

$$\frac{dT}{T} = -\frac{4}{3}\frac{bV^{-1/3}}{2bV^{2/3}}dV$$

$$\frac{dT}{T} = -\frac{2}{3}V^{-1}dV$$

$$\ln T = \ln V^{-2/3}$$

$$T \propto V^{-2/3} \qquad \therefore \quad V \propto T^{-3/2}$$

Ans. 7: (c)

Solution: Heat In = Heat Out

$$k_1 l\left(T-T_1\right)A = k_2 l\left(T_2-T\right)A$$

$$T-T_1 = 2\left(T_2-T\right) = 2T_2-2T$$

$$3T = T_1+2T_2 \Rightarrow T = \frac{T_1+2T_2}{3}$$

Ans. 8: (d)

Solution: $\eta = 1-\frac{T_2}{T_1} = 1-\frac{0}{T} = 1$

Ans. 9: (d)

Solution: $\eta = \frac{\Delta W}{Q_1}$, where ΔW = area under the curve , Q_1 = area under high temperature

$$\eta_A = \frac{\left(2T-T\right)\left(3S-0\right)}{2T\left(3S-0\right)} = \frac{T}{2T} = \frac{1}{2} \quad \text{and} \quad \eta_B = \frac{\left(4T-3T\right)}{4T}\frac{\left(3S-0\right)}{\left(3S-0\right)} = \frac{T}{4T} = \frac{1}{4}$$

$$\Rightarrow \frac{\eta_A}{\eta_B} = \frac{1/2}{1/4} = 2 \Rightarrow \eta_A = 2\eta_B$$

Ans. 10: (b)

Solution: $TdS = dU - \rho dV$

$$dS = \frac{1}{T}dU - \frac{P}{T}dV$$

$$\left(\frac{\partial S}{\partial U}\right)_V = \frac{1}{T}$$

$$\frac{n}{2}\frac{5R}{U} = \frac{1}{T}$$

$$U = \frac{5}{2}nRT$$

$$C_V = \frac{5}{2}nR$$

$$C_P = \frac{7}{2}nR$$

---

3. Entropy

Q1. Consider an ideal gas of mass m at temperature T_1 which is mixed isobarically (i.e. at constant pressure) with an equal mass of same gas at temperature T_2 in a thermally insulated container. What is the change of entropy of the universe?

(a) $2mC_p \ln\left(\frac{T_1+T_2}{2\sqrt{T_1T_2}}\right)$ (b) $2mC_p \ln\left(\frac{T_1-T_2}{2\sqrt{T_1T_2}}\right)$

(c) $2mC_p \ln\left(\frac{T_1+T_2}{2T_1T_2}\right)$ (d) $2mC_p \ln\left(\frac{T_1-T_2}{2\sqrt{T_1T_2}}\right)$

JEST-2012

Q2. Consider a particle with three possible spin states: $s=0$ and ± 1. There is a magnetic field h present and the energy for a spin state s is $-hs$. The system is at a temperature T. Which of the following statements is true about the entropy $S(T)$?

(a) $S(T)=\ln 3$ at $T=0$, and 3 at high T (b) $S(T)=\ln 3$ at $T=0$, and 0 at high T

(c) $S(T)=0$ at $T=0$, and 3 at high T (d) $S(T)=0$ at $T=0$, and $\ln 3$ at high T

JEST-2013

Q3. Consider a system of $2N$ non-interacting spin $1/2$ particles each fixed in position and carrying a magnetic moment μ. The system is immersed in a uniform magnetic field B. The number of spin up particles for which the entropy of the system will be maximum is

(a) 0 (b) N (c) $2N$ (d) $N/2$

JEST-2014

---

3. Entropy (Solution)

Ans. 1: (a)

Solution: Let us consider final temperature will be T

$$mC\left(T_1 - T\right) = mC\left(T - T_2\right) \Rightarrow T = \frac{T_1 + T_2}{2}$$

$$\Delta S_1 = mC_p \frac{\Delta T}{T}$$

Now, $\Delta S = \Delta S_1 + \Delta S_2 \Rightarrow \Delta S = mC_p \int_{T_1}^{T} \frac{dT}{T} + mC_p \int_{T_2}^{T} \frac{dT}{T}$

$$\Rightarrow \Delta S = mC_p \ln\left(\frac{T}{T_1}\right) + mC_p \ln\left(\frac{T}{T_2}\right)$$

$$\Rightarrow \Delta S = 2mC_p \ln \frac{T}{\sqrt{T_1 T_2}} = mC_p \ln\left(\frac{T_1 + T_2}{2\sqrt{T_1 T_2}}\right)^2 \Rightarrow \Delta S = 2mC_p \ln\left(\frac{T_1 + T_2}{2\sqrt{T_1 T_2}}\right)$$

Ans. 2: (d)

Solution: $S = k \ln \omega$, where $\omega =$ number of microstates

$S = k \ln 3$ $\quad$ $\omega = 3$, at height T and at $T = 0$, it is perfect ordered i.e. $S = 0$

Ans. 3: (b)

Solution: Let us consider n number of spin out of $2N$ particle have spin up remaining $2N - n$ is down.

Number of ways, $\omega = \begin{cases} 2^N C_n & \text{for spin } \frac{1}{2} \text{(up)} \\ 2^N C_{2N-n} & \text{for spin } \frac{1}{2} \text{(down)} \end{cases}$,

Entropy, $S = k \ln \omega \Rightarrow S = k \ln {}^{2N}C_{2N-n} + k \ln {}^{2N}C_n$

$$S = k\left\{\left[\ln \frac{2N!}{(n!)(2N-n)!}\right] + \left[\ln \frac{2N!}{(n!)(2N-n)!}\right]\right\}$$

$$S = 2k\left[\left(\ln 2N! - \ln n! - \ln(2N-n)!\right)\right]$$

$$S = 2k\left[2N \ln 2N - 2N - n \ln n + n - \left\{(2N-n)\ln(2N-n) - (2N-n)\right\}\right]$$

$$\left[\because \ln N! = N \ln N - N!\right]$$

$$S = 2k\left[2N\ln 2N - 2N - n\ln n + n - 2N\ln\left(2N-n\right) + n\ln\left(2N-n\right) + \left(2N-n\right)\right]$$

$$S = 2k\left[2N\ln 2N - n\ln n - 2N\ln\left(2N-n\right) + n\ln\left(2N-n\right)\right]$$

Now for maximum entropy at equilibrium for spin $\frac{1}{2}$ up particle,

$$\frac{dS}{dn} = 0$$

$$\frac{dS}{dn} = 2k\left[-\frac{n}{n}\cdot 1 - \ln n - \frac{2N}{2N-n}\left(-1\right) + \frac{n}{2N-n}\left(-1\right) + \ln\left(2N-n\right)\right]$$

$$= 2k\left[-1 - \ln n + \frac{2N}{2N-n} - \frac{n}{2N-n} + \ln\left(2N-n\right)\right]$$

$$= 2k\left[-1 + \frac{2N-n}{2N-n} + \ln\left(2N-n\right) - \ln n\right] \Rightarrow 2k\left[-1 + 1 + \ln\frac{\left(2N-n\right)}{n}\right] = 0$$

$$\because \quad 2k \neq 0$$

$$\therefore \ln\left(\frac{2N-n}{n}\right) = 0 \Rightarrow \frac{2N-n}{n} = 1 \Rightarrow 2N = 2n \Rightarrow n = N$$

---

4. Micro Canonical

Q1. The energy of a particle is given by $E = |p| + |q|$ where p and q are the generalized momentum and coordinate, respectively. All the states with $E \le E_0$ are equally probable and states with $E > E_0$ are inaccessible. The probability density of finding the particle at coordinate q, with $q > 0$ is:

(a) $\frac{(E_0 + q)}{E_0^2}$ (b) $\frac{q}{E_0^2}$ (c) $\frac{(E_0 - q)}{E_0^2}$ (d) $\frac{1}{E_0}$

JEST-2016

Q2. Suppose that the number of microstates available to a system of N particles depends on N and the combined variable UV^2, where U is the internal energy and V is the volume of the system. The system initially has volume $2m^3$ and energy $200\,J$. It undergoes an isentropic expansion to volume $4m^3$. What is the final pressure of the system in SI units?

JEST-2017

---

4. Micro Canonical (Solution)

Ans. 1: (c)

Solution: For condition, $E = |p| + |q|$ total number of accessible state upto energy E_0 for $q > 0$

is area under the curve $= \frac{1}{2} \times 2 \times E_0^2 = E_0^2$

The probability density of finding the particle at coordinate q, with $q > 0$

$$\frac{dpdq}{E_0^2} = \frac{pdq}{E_0^2} \Rightarrow \frac{(E_0 - q)\,dq}{E_0^2}$$

For probability at point q, dq is insignificant so $p(q) = \frac{(E_0 - q)}{E_0^2}$

Ans. 2: 25

Solution: Here, $\Omega = (UV^2)N \Rightarrow S = Nk \ln(UV^2)$

From law of thermodynamics,

$TdS = dU + PdV$

$$\Rightarrow \left.\frac{\partial S}{\partial U}\right|_V = \frac{1}{T} \Rightarrow U = NkT \qquad \text{.....(1)}$$

and $$\left.\frac{\partial S}{\partial V}\right|_U = \frac{P}{T} \Rightarrow PV = 2NkT \qquad \text{.....(2)}$$

From equation (1) and (2),

$$PV = 2U \qquad \text{.....(3)}$$

Now, from equation (3),

$$P_iV_i = 2U_i \Rightarrow P_i = \frac{2U_i}{V_i} = \frac{2 \times 200}{2} = 200\,atm \qquad \text{.....(4)}$$

As the given process is isoentropic,

$$\therefore TdS = 0 = dU + PdV \Rightarrow \left.\frac{\partial U}{\partial V}\right|_S = -P$$

and from equation (3),

$$\left.\frac{\partial U}{\partial V}\right|_S = \frac{P}{2} + \frac{V}{2}\left.\frac{\partial P}{\partial V}\right|_S = -P \Rightarrow \frac{V}{2}\frac{\partial P}{\partial V} = -\frac{3P}{2} \Rightarrow \frac{\partial P}{P} = -3\frac{\partial V}{V}$$

On solving above equation, we have

$$PV^3 = K \quad \text{(constant)}$$

$$\Rightarrow P_f V_f^{\,3} = P_i V_i^3 \Rightarrow P_f = \frac{P_i V_i^3}{V_f^{\,3}} = \frac{200 \times 2^3}{4^3} = 25\,atm$$

---

5. Canonical

Q1. Consider a system maintained at temperature T, with two available energy states E_1 and E_2 each with degeneracies g_1 and g_2. If p_1 and p_2 are probabilities of occupancy of the two energy states, what is the entropy of the system?

(a) $S = -k_B\left[p_1 \ln(p_1/g_1) + p_2 \ln(p_2/g_2)\right]$

(b) $S = -k_B\left[p_1 \ln(p_1 g_1) + p_2 \ln(p_2 g_2)\right]$

(c) $S = -k_B\left[p_1 \ln\left(p_1^{g_1}\right) + p_2 \ln\left(p_2^{g_2}\right)\right]$

(d) $S = -k_B\left[(1/p_1)\ln(p_1/g_1) + (1/p_2)\ln(p_2/g_2)\right]$

JEST-2012

Q2. A collection of N two-level systems with energies 0 and $E > 0$ is in thermal equilibrium at temperature T. For $T \to \infty$, the specific heat approaches to,

(a) 0 (b) Nk_B (c) $\frac{3Nk_B}{2}$ (d) ∞

JEST-2012

Q3. A monoatomic gas consists of atoms with two internal energy levels, ground state $E_0 = 0$ and an excited state $E_1 = E$. The specific heat of the gas is given by

(a) $\frac{3}{2}k$

(b) $\frac{E^2 e^{E/kT}}{kT^2\left(1+e^{E/kT}\right)^2}$

(c) $\frac{3}{2}k + \frac{E^2 e^{E/kT}}{kT^2\left(1+e^{E/kT}\right)^2}$

(d) $\frac{3}{2}k - \frac{E^2 e^{E/kT}}{kT^2\left(1+e^{E/kT}\right)^2}$

JEST-2014

Q4. For a system in thermal equilibrium with a heat bath at temperature T, which one of the following equalities is correct? $\left(\beta = \frac{1}{k_B T}\right)$

(a) $\frac{\partial}{\partial\beta}\langle E\rangle = \langle E\rangle^2 - \langle E^2\rangle$

(b) $\frac{\partial}{\partial\beta}\langle E\rangle = \langle E^2\rangle - \langle E\rangle^2$

(c) $\frac{\partial}{\partial\beta}\langle E\rangle = \langle E^2\rangle + \langle E\rangle^2$

(d) $\frac{\partial}{\partial\beta}\langle E\rangle = -\left(\langle E^2\rangle + \langle E\rangle^2\right)$

JEST-2015

Q5. A particle in thermal equilibrium has only 3 possible states with energies $-\in,\ 0,\ \in$. If the system is maintained at a temperature, $T >> \frac{\in}{k_B}$, then the average energy of the particle can be approximated to,

(a) $\frac{2\in^2}{3k_BT}$ (b) $\frac{-2\in^2}{3k_BT}$ (c) $\frac{-\in^2}{k_BT}$ (d) 0

JEST-2015

Q6. A two dimensional box in a uniform magnetic field B contains $\frac{N}{2}$ localised spin-$\frac{1}{2}$ particles with magnetic moment μ, and $\frac{N}{2}$ free spinless particles which do not interact with each other. The average energy of the system at a temperature T is:

(a) $3NkT - \frac{1}{2}N\mu B\sinh\left(\frac{\mu B}{k_BT}\right)$ (b) $NkT - \frac{1}{2}N\mu B\tanh\left(\frac{\mu B}{k_BT}\right)$

(c) $\frac{1}{2}NkT - \frac{1}{2}N\mu B\tanh\left(\frac{\mu B}{k_BT}\right)$ (d) $\frac{3}{2}NkT + \frac{1}{2}N\mu B\cosh\left(\frac{\mu B}{k_BT}\right)$

JEST-2016

Q7. A gas of N molecules of mass m is confined in a cube of volume $V = L^3$ at temperature T. The box is in a uniform gravitational field $-g\hat{z}$. Assume that the potential energy of a molecule is $U = mgz$ where $z \in [0, L]$ is the vertical coordinate inside the box. The pressure $P(z)$ at height z is:

(a) $P(z) = \frac{N}{V}\frac{mgL}{2}\frac{\exp\left(-\frac{mg\left(z-\frac{L}{2}\right)}{k_BT}\right)}{\sinh\left(\frac{mgL}{2k_BT}\right)}$ (b) $P(z) = \frac{N}{V}\frac{mgL}{2}\frac{\exp\left(-\frac{mg\left(z-\frac{L}{2}\right)}{k_BT}\right)}{\cosh\left(\frac{mgL}{2k_BT}\right)}$

(c) $P(z) = \frac{k_BTN}{V}$ (d) $P(z) = \frac{N}{V}mgz$

JEST-2016

Q8. For a quantum mechanical harmonic oscillator with energies, $E_n = \left(n + \frac{1}{2}\right)\hbar\omega$, where $n = 0, 1, 2...$, the partition function is:

(a) $\dfrac{e^{\frac{\hbar\omega}{k_B T}}}{e^{\frac{\hbar\omega}{2k_B T}} - 1}$ (b) $e^{\frac{\hbar\omega}{2k_B T}} - 1$ (c) $e^{\frac{\hbar\omega}{2k_B T}} + 1$ (d) $\dfrac{e^{\frac{\hbar\omega}{2k_B T}}}{e^{\frac{\hbar\omega}{k_B T}} - 1}$

JEST-2016

Q9. If the mean square fluctuations in energy of a system in equilibrium at temperature T is proportional to T^{α}, then the energy of the system is proportional to

(a) $T^{\alpha-2}$ (b) $T^{\frac{\alpha}{2}}$ (c) $T^{\alpha-1}$ (d) T^{α}

JEST-2017

Q10. Two classical particles are distributed among $N(>2)$ sites on a ring. Each site can accommodate only one particle. If two particles occupy two nearest neighbour sites, then the energy of the system is increased by $\in$. The average energy of the system at temperature T is

(a) $\dfrac{2 \in e^{-\beta\in}}{(N-3) + 2e^{-\beta\in}}$ (b) $\dfrac{2N \in e^{-\beta\in}}{(N-3) + 2e^{-\beta\in}}$

(c) $\dfrac{\in}{N}$ (d) $\dfrac{2 \in e^{-\beta\in}}{(N-2) + 2e^{-\beta\in}}$

JEST-2017

Q11. If the Hamiltonian of a classical particles is $H = \dfrac{p_x^2 + p_y^2}{2m} + xy$, then $\langle x^2 + xy + y^2 \rangle$ at temperature T is equal to

(a) $k_B T$ (b) $\frac{1}{2}k_B T$ (c) $2k_B T$ (d) $\frac{3}{2}k_B T$

JEST-2017

Q12. When a collection of two-level systems is in equilibrium at temperature T_0, the ratio of the population in the lower and upper levels is $2:1$. When the temperature is changed to T, the ratio is $8:1$. Then

(a) $T = 2T_0$ (b) $T_0 = 2T$ (c) $T_0 = 3T$ (d) $T_0 = 4T$

JEST-2018

Q13. A collection of N interacting magnetic moments, each of magnitude μ, is subjected to a magnetic field H along the z direction. Each magnetic moment has a doubly degenerate level of energy zero and two non-degenerate levels of energies $-\mu H$ and μH respectively. The collection is in thermal equilibrium at temperature T. The total energy $E(T,H)$ of the collection is

(a) $-\dfrac{\mu HN \sinh\left(\dfrac{\mu H}{k_B T}\right)}{1+\cosh\left(\dfrac{\mu H}{k_b T}\right)}$

(b) $-\dfrac{\mu HN}{2\left(1+\cosh\left(\dfrac{\mu H}{k_b T}\right)\right)}$

(c) $-\dfrac{\mu HN \cosh\left(\dfrac{\mu H}{k_B T}\right)}{1+\cosh\left(\dfrac{\mu H}{k_b T}\right)}$

(d) $-\mu HN \dfrac{\sinh\left(\dfrac{\mu H}{k_B T}\right)}{\cosh\left(\dfrac{\mu H}{k_b T}\right)}$

JEST-2018

Q14. Consider a system of N distinguishable particles with two energy levels for each particle, a ground state with energy zero and an excited state with energy $\varepsilon > 0$. What is the average energy per particle as the system temperature $T \to \infty$?

(a) 0 (b) $\dfrac{\varepsilon}{2}$ (c) ε (d) ∞

JEST-2019

Q15. Consider a diatomic molecule with an infinite number of equally spaced non-degenerate energy levels. The spacing between any two adjacent levels is ε and the ground state energy is zero. What is the single particle partition function Z?

(a) $Z = \dfrac{1}{1-\dfrac{\varepsilon}{k_B T}}$ (b) $Z = \dfrac{1}{1-e^{\frac{\varepsilon}{k_B T}}}$ (c) $Z = \dfrac{1}{1-e^{\frac{2\varepsilon}{k_B T}}}$ (d) $Z = \dfrac{1-\dfrac{\varepsilon}{k_B T}}{1+\dfrac{\varepsilon}{k_B T}}$

JEST-2019

Q16. The energy spectrum of a particle consists of four states with energies $0, \in, 2\in, 3\in$. Let $Z_B(T), Z_F(T)$ and $Z_C(T)$ denote the canonical partition functions for four non-interacting particles at temperature T. The subscripts B, F and C corresponds to bosons, fermions and distinguishable classical particles, respectively. Let $y = \exp\left(-\dfrac{\in}{k_B T}\right)$.

Which one of the following statements is true about $Z_B(T), Z_F(T)$ and $Z_C(T)$?

(a) They are polynomials in y of degree $12, 6$ and 12, respectively.

(b) They are polynomials in y of degree $16, 10$ and 16, respectively

(c) They are polynomials in y of degree $9, 6$ and 12, respectively.

(d) They are polynomials in y of degree $12, 10$ and 16, respectively.

JEST-2019

Q17. Consider a system of two particles at temperature $T \to \infty$. Each of them can occupy three different quantum energy levels having energies $0, \in$ and $2\in$, and both of them cannot occupy the same energy level. What is the average energy of the system?

(a) $\in$ (b) $\dfrac{3\in}{2}$ (c) $2\in$ (d) $4\in$

JEST-2020

Q18. Consider a classical harmonic oscillator in thermal equilibrium at a temperature T. If the spring constant is changed to twice its value isothermally, then the amount of work done on the system is

(a) $k_B T \ln 2$ (b) $k_B T \frac{\ln 2}{2}$ (c) $2k_B T \ln 2$ (d) $-k_B T \ln 2$

JEST-2020

Q19. A classical gas of N particles is kept at a temperature T and is confined to move on a two-dimensional surface (xy-plane). If an external linear force field is applied along the x-axis, then the partition function of the system will be proportional to

(a) T^N (b) T^{2N} (c) $T^{N/2}$ (d) $T^{3N/2}$

JEST-2020

---

5. Canonical (Solution)

Ans. 1: (a)

Solution: $p_i = \dfrac{\Sigma g_i e^{-\beta E_i}}{z}$, where z is partition function

$$\Rightarrow \ln p_i = \ln g_i - \beta E_i - \ln z$$

$$\Rightarrow \ln \frac{p_i}{g_i} = -\beta E_i + \frac{F}{kT} \qquad [\because F = -kT \ln z]$$

$$\Rightarrow \left\langle \ln \frac{p_i}{g_i} \right\rangle = -\beta \langle E_i \rangle + \beta \langle F \rangle$$

$$\Rightarrow \left\langle \ln \frac{p_i}{g_i} \right\rangle = \beta [F - U] \qquad [\because F = U - TS]$$

$$\left\langle \ln \frac{p_i}{g_i} \right\rangle = -\beta \times TS, \qquad \left[\because \beta = \frac{1}{kT}\right]$$

$$S = -k \left\langle \ln \frac{p_i}{g_i} \right\rangle = -k \left(\sum p_i \ln \frac{p_i}{g_i} \right) = -k \left[p_1 \ln \frac{p_1}{g_1} + p_2 \ln \frac{p_2}{g_2} \right]$$

Ans. 2: (a)

Solution: $Z = \sum e^{-\beta E_i} = e^{-\beta \times 0} + e^{-\beta E_i} \Rightarrow Z = 1 + e^{-\beta E} \Rightarrow \ln z = \ln\left(1 + e^{-\beta E}\right)$

$$U = \langle E \rangle = -\frac{\partial}{\partial \beta} \ln z = -\frac{\partial}{\partial \beta} \ln\left(1 + e^{-\beta E}\right) = -\frac{1}{1 + e^{-\beta E}} \times e^{-\beta E}(-E) = \frac{E e^{-\beta E}}{1 + e^{-\beta E}}$$

Now, $\left(\dfrac{\partial U}{\partial T}\right)_V = C_V = \dfrac{\partial}{\partial T}\left(\dfrac{E e^{-\frac{E}{kT}}}{1 + e^{-\frac{E}{kT}}}\right)$

$$\Rightarrow C_V = \frac{\left(\dfrac{E^2}{kT^2} e^{\frac{-E}{kT}} + \dfrac{E^2}{kT^2} e^{\frac{-2E}{kT}} - \dfrac{E^2}{kT^2} e^{\frac{-2E}{kT}}\right)}{\left(1 + e^{\frac{-E}{kT}}\right)^2} \Rightarrow C_V = \frac{\dfrac{E^2}{kT^2} e^{\frac{-E}{kT}}}{\left(1 + e^{\frac{-E}{kT}}\right)^2} \Rightarrow C_V\Big|_{T \to \infty} = 0$$

Ans. 3: (c)

Solution: $E_0 = 0, \quad E_1 = E$

Then partition function is

$$z = \sum e^{-\beta E_i} \Rightarrow z = e^{-\beta \times 0} + e^{-\beta E} \Rightarrow \ln z = \ln\left(1 + e^{-\beta E_1}\right)$$

$$U = \langle E \rangle = \frac{-\partial}{\partial \beta} \ln z = -\frac{\partial}{\partial \beta} \ln\left(1 + e^{-\beta E}\right) = -\frac{1}{\left(1 + e^{-\beta E}\right)}(-E)e^{-\beta E} = \frac{Ee^{-\beta E}}{1 + e^{-\beta E}} \qquad [\because \beta = k_B T]$$

$$\left(\frac{\partial U}{\partial T}\right)_v = C_V = \frac{\left(1 + e^{-\frac{E}{k_B T}}\right) E.e^{-\frac{E}{k_B T}} . \left(\frac{E}{k_B T^2}\right) - Ee^{-\frac{E}{k_B T}} \cdot e^{-\frac{E}{k_B T}} \left(\frac{E}{k_B T^2}\right)}{\left(1 + e^{-\frac{E}{k_B T}}\right)^2}$$

$$C_V = \frac{\frac{E^2}{k_B T^2} e^{-\frac{E}{k_B T}} + \frac{E^2}{k_B T^2} e^{-\frac{2E}{k_B T}} - \frac{E^2}{k_B T^2} e^{-\frac{2E}{k_B T}}}{\left(1 + e^{-\frac{E}{k_B T}}\right)^2} = \frac{E^2 e^{-\frac{E}{k_B T}}}{k_B T^2 \left(1 + e^{-\frac{E}{k_B T}}\right)^2} = \frac{E^2 e^{\frac{E}{k_B T}}}{k_B T^2 \left(1 + e^{\frac{E}{k_B T}}\right)^2}$$

If gas will classically allowed, then $C_V = \frac{3}{2} k_B$

and quantum mechanically, $C_V = \dfrac{E^2 e^{\frac{E}{k_B T}}}{k_B T^2 \left(1 + e^{\frac{E}{k_B T}}\right)^2}$

$$\therefore \qquad C_V = \frac{3}{2} k_B + \frac{E^2 e^{E/kT}}{kT^2 \left(1 + e^{E/kT}\right)^2}$$

Ans. 4: (a)

Solution: $\because \langle E \rangle = \dfrac{\sum_i E_i e^{-\beta E_i}}{\sum_i e^{-\beta E_i}}$

$$\frac{\partial \langle E \rangle}{\partial \beta} = -\frac{\sum_i E_i^2 e^{-\beta E_i}}{\sum_i e^{-\beta E_i}} + \frac{\sum_i E_i^2 e^{-\beta E_i} \cdot e^{-\beta E_i}}{\left(\sum_i e^{-\beta E_i}\right)^2} = -\frac{\sum_i E_i^2 e^{-\beta E_i}}{\sum_i e^{-\beta E_i}} + \frac{\sum_i E_i^2 e^{-2\beta E_i}}{\left(\sum_i e^{-\beta E_i}\right)^2}$$

$$\Rightarrow \frac{\partial \langle E \rangle}{\partial \beta} = \langle E \rangle^2 - \langle E^2 \rangle$$

Ans. 5: (b)

Solution: $\langle E\rangle = \dfrac{-\in e^{+\frac{\in}{kT}} + 0 + \in e^{-\frac{\in}{kT}}}{e^{\frac{\in}{kT}} + 1 + e^{-\frac{\in}{kT}}} = \in\left(\dfrac{e^{-\frac{\in}{kT}} - e^{\frac{\in}{kT}}}{1 + e^{-\frac{\in}{kT}} + e^{\frac{\in}{kT}}}\right)$

$$\Rightarrow \langle E\rangle = \frac{\left[\left(1-\frac{\in}{kT}\right)-\left(1+\frac{\in}{kT}\right)\right]}{1+\left(1-\frac{\in}{kT}\right)+\left(1+\frac{\in}{kT}\right)} = \frac{-2\in^2}{3kT}$$

Ans. 6: (c)

Solution: For $\frac{N}{2}$ free particles in two dimension, average energy is $\frac{N}{2}kT$ and for $\frac{N}{2}$ localized spin-$\frac{1}{2}$ particle, the average energy is $-\frac{1}{2}N\mu B\tanh\left(\frac{\mu B}{k_B T}\right)$

Then average energy of system at temperature T is

$$\langle E\rangle = \frac{NkT}{2} - \frac{1}{2}N\mu B\tanh\left(\frac{\mu B}{k_B T}\right).$$

Ans. 7: (c)

Solution: The partition function of a system is given by,

$$Z_N = \left(\frac{2\pi m k_B T}{h^2}\right)^{\frac{3N}{2}}\left(\frac{k_B TV}{mgL}\right)^N\left(1-\exp\left(-\frac{mgl}{k_B T}\right)\right)^N$$

Helmohtz free energy is given by, $F = -k_B T\ln Z_N$

Pressure is given by $P = -\left(\frac{\partial F}{\partial V}\right)_{T,N} = \frac{k_B TN}{V}$

Ans. 8: (d)

Solution: $z = \exp\left(-\frac{\hbar\omega}{2kT}\right) + \exp\left(-\frac{3\hbar\omega}{2kT}\right) + \exp\left(-\frac{5\hbar\omega}{2kT}\right) + \exp\left(-\frac{7\hbar\omega}{2kT}\right).....$

$$z = \exp\left(-\frac{\hbar\omega}{2kT}\right)\left(1+\exp\left(-\frac{\hbar\omega}{kT}\right)+\exp\left(-\frac{2\hbar\omega}{kT}\right).....\right)$$

$$z=\frac{\exp\left(-\frac{\hbar\omega}{2kT}\right)}{1-\exp\left(\frac{\hbar\omega}{kT}\right)}\Rightarrow\frac{1}{\exp\left(\frac{\hbar\omega}{2kT}\right)-\exp\left(-\frac{\hbar\omega}{2kT}\right)}\Rightarrow\frac{\exp\left(\frac{\hbar\omega}{2kT}\right)}{\exp\left(\frac{\hbar\omega}{kT}\right)-1}$$

Ans. 9: (c)

Solution: $(\Delta E)^2=kT^2C_V\Rightarrow T^{\alpha-2}\propto C_V\Rightarrow T^{\alpha-2}\propto\left(\frac{\partial U}{\partial T}\right)_V\Rightarrow U\propto T^{\alpha-1}$

Ans. 10: (a)

Solution: Since two particle two nearest neighbour sites, which energy of system increased by $\in$, and remaining $(N-3)$ particle has zero energy, then particle function is given

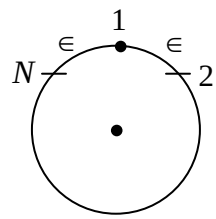

$$z=2e^{-\beta\in}+(N-3)e^{-\beta.0}=(N-3)+2e^{-\beta\in}$$

then $\langle E\rangle=KT^2\frac{\partial}{\partial T}(\ln z)$

$$=\frac{KT^2}{z}.\left[0+2e^{-\beta\in}.\frac{\partial}{\partial T}\left(-\frac{\in}{KT}\right)\right]=\frac{KT^2}{z}.2e^{-\beta\in}\left(\frac{\in}{KT^2}\right)$$

$$\langle E\rangle=\frac{2\in e^{-\beta\in}}{\left[(N-3)+2e^{-\beta\in}\right]}$$

Ans. 11: (a)

Ans. 12: (c)

Solution: $N=N_0\exp\left(-\frac{E}{k_BT}\right)\Rightarrow\frac{N_1}{N_2}=\exp\left(\frac{E_2-E_1}{k_BT_0}\right)\Rightarrow 2=\exp\left(\frac{E_2-E_1}{kT_0}\right)$, and

$$8=\exp\left(\frac{E_2-E_1}{kT}\right)\quad\frac{\ln 2}{\ln 8}=\frac{T}{T_0}\Rightarrow T_0=3T$$

Ans. 13: (a)

Solution: $Z_1=\left(2\times\exp\left(-\frac{0}{k_BT}\right)+\exp\left(-\frac{-\mu H}{k_BT}\right)+\exp\left(-\frac{\mu H}{k_BT}\right)\right)\Rightarrow Z_1=\left(2+2\cosh\frac{\mu H}{k_BT}\right)$

$$Z_N=\left(2+2\cosh\frac{\mu H}{k_BT}\right)^N\quad U=k_BT^2\left(\frac{\partial\ln Z_N}{\partial T}\right)_{N,V}=-\frac{N\mu H\sinh\left(\frac{\mu H}{k_BT}\right)}{1+\cos\frac{\mu H}{k_BT}}$$

Ans. 14: (b)

Solution: $\langle E \rangle = \sum_i P_i E_i \Rightarrow P_i = \frac{e^{\beta E_i}}{z}$

$$\langle E \rangle = 0 \times \frac{01}{1+e^{-\beta\varepsilon}} + \varepsilon \times \frac{1}{1+e^{-\beta\varepsilon}}$$

$$= \frac{\varepsilon}{1+e^{-\varepsilon/k_B T}} = \frac{\varepsilon}{2} \text{ at } T \to \infty$$

Ans. 15: No option is matched

Solution: $Z = \sum_i g_i e^{-\beta\varepsilon_i}$

$$g_i = 1$$

$$Z = 1 + e^{-\beta\varepsilon} + e^{-2\beta\varepsilon} + \ldots\ldots$$

$$Z = \frac{1}{1-e^{-\beta\varepsilon}}$$

Ans. 16: (a)

Solution:

Bose

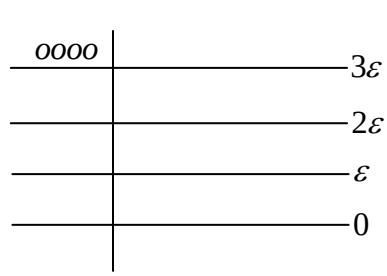

$$y = e^{-\varepsilon/k_B T}$$

Number of particle $N = 4$ $\qquad \omega = \prod_i \frac{(n_i + g_i)!}{n_i!\, g_i!}$

Maximum energy $= 12\varepsilon$

$$Z_B = e^{-12\varepsilon/k_B T} + \cdots$$

$$= y^{12} + \cdots \qquad \text{degree} = 12$$

Fermions

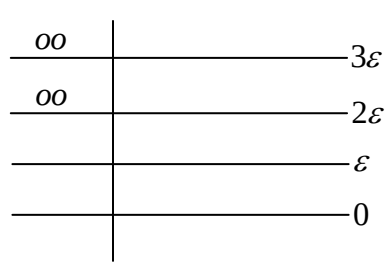

Maximum energy $e^{-6\varepsilon/k_BT-4\varepsilon/k_BT}+e+\cdots\cdots$

$Z_F = y^6+\cdots$ degree $=6$

Classical

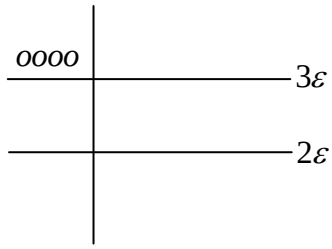

$Z_C = y^{12}+.....$

Ans. 17: (c)

Solution: $z = e^{-\beta\cdot 0}+e^{-\beta 3\in}+e^{-2\in}$

$$\langle\in\rangle = \frac{\in e^{-\beta\cdot o}}{z}+\frac{3\in e^{-\beta 3\in}}{z}+\frac{2\in e^{-\beta 3\in}}{z}$$

$$=\frac{\in}{z}\left[1+3e^{-\beta 3\in}+2e^{-\beta\in}\right]$$

$$=\frac{\in\cdot 6}{3}=2\in \qquad T\to\infty$$

$\in_1$	$\in_2$	$\in_3$	
$\in$	$3\in$	$2\in$	
	A	A	
A	A		
A		A	

Ans. 18: (b)

Solution: $Z=\dfrac{2\pi k_BT}{hw}$, $F=-k_BT\ln Z$, $F=-k_BT\ln\dfrac{2\pi k_BT}{h\sqrt{\dfrac{k}{m}}}$, $F=-k_BT\ln\left(\dfrac{2\pi k_BT}{h\sqrt{\dfrac{1}{m}}}k^{-1/2}\right)$

$P=-\dfrac{\partial F}{\partial\,\text{Parameter}}=-\dfrac{\partial F}{\partial k}$ k is identified parameter for the present case (H.O.) like Volume is identified parameter for a $3D$ box.

$$P=k_BT\frac{1}{\dfrac{2\pi k_BT}{h\sqrt{\dfrac{1}{m}}}}\frac{2\pi k_BT}{h\sqrt{\dfrac{1}{m}}}\left(-\frac{1}{2}\right)k^{-3/2}=\frac{-k_BT}{2k}$$

$$\text{Work}=\int_k^{2k}Pdk=\int_k^{2k}-\frac{k_BT}{2k}dk=\frac{-k_BT}{2}\int_k^{2k}\frac{dk}{k}=-k_BT\frac{\ln 2}{2}$$

work done on the system $=k_BT\dfrac{\ln 2}{2}$

Ans. 19: (d)

Solution: $F = -kx = -\frac{dV}{dx}$

$$-kx = -\frac{dV}{dx}$$

$$V = +kx^2$$

$$z_1 = \frac{1}{h^2}\iint \iint_{-\infty}^{\infty} e^{-\beta\left[\frac{p_x^2}{2m}+\frac{p_y^2}{2m}+kx^2\right]} dp_x dp_y dxdy$$

$$\alpha \quad \left(\sqrt{2\pi x k_B T}\right)^2 \sqrt{\frac{\pi}{\beta k}}$$

$$\alpha\ T^{\frac{1}{2}+1} = T^{\frac{3}{2}} \Rightarrow For\ N\ Particles\, T^{\frac{3N}{2}}$$

---

6. Grand Canonical

Q1. Consider a system of particles in three dimensions with momentum $\vec{p}$ and energy $E = c|\vec{p}|, c$ being a constant. The system is maintained at inverse temperature β, volume V and chemical potential μ. What is the grand partition function of the system?

(a) $\exp\left[e^{\beta\mu} 8\pi V/(\beta ch)^3\right]$ (b) $e^{\beta\mu} 6\pi V/(\beta ch)^2$

(c) $\exp\left[e^{\beta\mu} 6\pi V/(\beta ch)^3\right]$ (d) $e^{\beta\mu} 8\pi V/(\beta ch)^2$

JEST-2012

Q2. Consider a grand ensemble of a system of one dimensional non-interacting classical harmonic oscillators (each of frequency ω). Which one of the following equations is correct? Here the angular bracket $\langle\cdot\rangle$ indicate the ensemble average. N, E and T represent the number of particles, energy and temperature, respectively. k_B is the Boltzmann constant.

(a) $\langle E\rangle = N\dfrac{k_B T}{2}$ (b) $\langle E\rangle = \langle N\rangle\dfrac{k_B T}{2}$

(c) $\langle E\rangle = Nk_B T$ (d) $\langle E\rangle = \langle N\rangle k_B T$

JEST-2019

---

6. Grand Canonical (Solution)

Ans. 1: (a)
Solution: Canonical partition function,

$$z_N = \frac{1}{h^3}\int e^{-\beta H} dp_x dp_y dp_z dxdydz\,, \qquad E = pc$$

$$z_N = \frac{V}{h^3}\int_0^\infty 4\pi\, p^2 e^{-E\beta} dp = \frac{V}{h^3}\int_0^\infty 4\pi \quad p^2 e^{-\beta pc} dp = \frac{4\pi \quad V}{h^3}\cdot\frac{\Gamma 3}{(\beta c)^3} = \frac{8\pi \quad V}{(\beta hc)^3}$$

Grand canonical partition function, $z_u = \exp\left[e^{\frac{\mu}{kT}} z_N\right] = \exp\left[e^{\frac{\mu}{kT}}\cdot\frac{8\pi V}{(\beta hc)^3}\right]$

$$\Rightarrow \exp\left[e^{\beta\mu}\cdot\frac{8\pi V}{(\beta hc)^3}\right]$$

Ans. 2: (d)

Solution: $E = K.E. + P.E. \Rightarrow E = \frac{P_x^2}{2m} + \frac{1}{2}kx^2\,(1D)$

$$E = \frac{1}{2}k_B T + \frac{1}{2}k_B T = k_B T \qquad \text{(Equiportion)}$$

$$\langle E\rangle = \langle N\rangle k_B T$$

---

7. Identical Particle

Q1. Consider a system of two particles A and B. Each particle can occupy one of three possible quantum states $|1\rangle, |2\rangle$ and $|3\rangle$. The ratio of the probability that the two particles are in the same state to the probability that the two particles are in different states is calculated for bosons and classical (Maxwell-Boltzmann) particles. They are respectively

(a) 1, 0 (b) $\frac{1}{2}$, 1 (c) 1, $\frac{1}{2}$ (d) 0, $\frac{1}{2}$

JEST-2013

Q2. Consider three situations of 4 particles in one dimensional box of width L with hard walls. In case (i), the particles are fermions, in case (ii) they are bosons, and in case (iii) they are classical. If the total ground state energy of the four particles in these three cases are E_F, E_B and E_{cl} respectively, which of the following is true?

(a) $E_F = E_B = E_{cl}$ (b) $E_F > E_B = E_{cl}$

(c) $E_F < E_B < E_{cl}$ (d) $E_F > E_B > E_{cl}$

JEST-2013

Q3. A cylinder at temperature $T = 0$ is separated into two compartments A and B by a free sliding piston. Compartments A and B are filled by Fermi gases made of spin $1/2$ and $3/2$ particles respectively. If particles in both the compartments have same mass, the ratio of equilibrium density of the gas in compartment A to that of gas in compartment B is

(a) 1 (b) $\frac{1}{3^{2/5}}$ (c) $\frac{1}{2^{2/5}}$ (d) $\frac{1}{2^{2/3}}$

JEST-2017

Q4. Consider a non-relativistic two-dimensional gas of N electrons with the Fermi energy E_F. What is the average energy per particle at temperature $T = 0$?

(a) $\frac{3}{5}E_F$ (b) $\frac{2}{5}E_F$ (c) $\frac{1}{2}E_F$ (d) E_F

JEST-2019

---

7. Identical Particle (Solution)

Ans. 1: (c)

Solution: For two particle in same state:

$$\begin{array}{c|c}
\text{Boson} & \text{Classical (Maxwell - Boltzman)} \\
\hline
\text{———}\ |3\rangle \longrightarrow |3\rangle \xrightarrow{AB} |3\rangle & \longrightarrow |3\rangle \longrightarrow |3\rangle \xrightarrow{AB} |3\rangle \\
\text{———}\ |2\rangle \xrightarrow{AB} |2\rangle \text{———}\ |2\rangle & \longrightarrow |2\rangle \xrightarrow{AB} |2\rangle \longrightarrow |2\rangle \\
\xrightarrow{AB} |1\rangle \longrightarrow |1\rangle \text{———}\ |1\rangle & \xrightarrow{AB} |1\rangle \longrightarrow |1\rangle \longrightarrow |1\rangle
\end{array}$$

Probability ratio: $\dfrac{1/3}{1/3} = 1$

For two particle in different states

$$\begin{array}{c|c}
\text{Boson} & \text{Classical (Maxwell-Boltzmann)} \\
\hline
\text{———}\ |3\rangle \xrightarrow{B} |3\rangle \xrightarrow{B} |3\rangle & \longrightarrow |3\rangle \longrightarrow |3\rangle \xrightarrow{B} |3\rangle \xrightarrow{A} |3\rangle \xrightarrow{B} |3\rangle \xrightarrow{A} |3\rangle \\
\xrightarrow{B} |2\rangle \longrightarrow |2\rangle \xrightarrow{A} |2\rangle & \xrightarrow{B} |2\rangle \xrightarrow{A} |2\rangle \longrightarrow |2\rangle \longrightarrow |2\rangle \xrightarrow{A} |2\rangle \xrightarrow{B} |2\rangle \\
\xrightarrow{A} |1\rangle \xrightarrow{A} |1\rangle \text{———}\ |1\rangle & \xrightarrow{A} |1\rangle \xrightarrow{B} |1\rangle \xrightarrow{A} |1\rangle \xrightarrow{B} |1\rangle \longrightarrow |1\rangle \longrightarrow |1\rangle
\end{array}$$

Probability ratio: $\dfrac{1/3}{2/3} = \dfrac{1}{2}$

Ans. 2: (b)

Solution: For fermions, in 1-D box of width L, the ground state energy for single particle is written as, $\dfrac{\pi^2\hbar^2}{2ml^2} = \in_0$

$\Rightarrow 1\times\in_0 + 1\times 4\in_0 + 1\times 9\in_0 + 1\times 16\in_0 = 30\in_0$

For Boson $= 4\times\in_0$, For Maxwell $= 4\times\in_0$

$E_F > E_B = E_{cl}$

Ans. 3: (c)

Solution: **Follow Pathria** Page 198 equation 20 for $\in_f$

And equation (38) at pages 200

From equation (38) at $T = 0$

$$p = \frac{2}{5} n \in_f$$

$$= \frac{2}{5} n \left(\frac{6\pi^2 n}{g} \right)^{2/3} \frac{\hbar^2}{2m} \qquad \text{(using equation (24))}$$

for equilibrium $\rho_A = \rho_B$

$$\Rightarrow n_A \left(\frac{n_A}{g_A} \right)^{2/3} = n_B \left(\frac{n_B}{g_B} \right)^{2/3}$$

$$\left(\frac{n_A}{n_B} \right)^{5/3} = \left(\frac{g_A}{g_B} \right)^{2/3}$$

$$g_A = 25 + 1 = 2 \times \frac{1}{2} + 1 = 2\,,\ g_B = 25 + 1 = 2 \times \frac{5}{2} + 1 = 4$$

$$\left(\frac{g_A}{g_B} \right) = \left(\frac{1}{2} \right)^{2/3} \Rightarrow \frac{n_A}{n_B} = \left(\frac{1}{2} \right)^{2/3 \times 2/3}$$

$$\frac{n_A}{n_B} = \frac{1}{2^{2/5}}$$

Ans. 4: (c)

---

8. Thermodynamics Relation

Q1. A thermally insulated ideal gas of volume V_1 and temperature T expands to another enclosure of volume V_2 through a porous plug. What is the change in the temperature of the gas?

(a) 0 (b) $T\ \ln\left(\frac{V_1}{V_2}\right)$ (c) $T\ \ln\left(\frac{V_2}{V_1}\right)$ (d) $T\ln\left(\frac{V_2-V_1}{V_2}\right)$

JEST-2012

Q2. An ideal gas with adiabatic exponent γ undergoes a process in which its pressure P is related to its volume V by the relation $P = P_0 - \alpha V$, where P_0 and α are positive constants. The volume starts from being very close to zero and increases monotonically to $\frac{P_0}{\alpha}$. At what value of the volume during the process does the gas have maximum entropy?

(a) $\frac{P_0}{\alpha(1+\gamma)}$ (b) $\frac{\gamma P_0}{\alpha(1-\gamma)}$ (c) $\frac{\gamma P_0}{\alpha(1+\gamma)}$ (d) $\frac{P_0}{\alpha(1-\gamma)}$

JEST-2016

(Solution)

8. Thermodynamics Relation

Ans. 1: (c)

Solution: $dH = TdS + VdP$, for porous plug Joul Thomshon $dH = 0$ and $TdS = 0$ since it is thermally insulated ideal gas

$VdP = 0$

$$\because VdP = 0 \Rightarrow nRdT = pdV \Rightarrow nRdT = \frac{nRTdV}{V}$$

$$dT = T\frac{dV}{V} \Rightarrow dT = T\int_{V_1}^{V_2}\frac{dV}{V} \Rightarrow dT = T\ln\frac{V_2}{V_1}$$

Ans. 2: (c)

Solution: $TdS = nC_V dT + PdV \Rightarrow TdS = \frac{nRdT}{(\gamma-1)} + PdV$

For maximum entropy, $dS = 0$

For Ideal gas, $PV = nRT \Rightarrow PdV + VdP = nRdT$

$$\Rightarrow TdS = \frac{PdV + VdP}{(\gamma-1)} + PdV \Rightarrow \frac{PV}{nR}dS = \frac{\gamma}{(\gamma-1)}PdV + \frac{VdP}{(\gamma-1)}$$

Since, $P = P_0 - \alpha V \Rightarrow dP = -\alpha dV$

$$\frac{PV}{nR}dS = \frac{\gamma}{(\gamma-1)}PdV - \frac{\alpha VdV}{(\gamma-1)} \Rightarrow \frac{dS}{dV} = \frac{\gamma nRP}{(\gamma-1)PV} - \frac{nR}{(\gamma-1)PV}\alpha V$$

For maximum entropy, $\frac{dS}{dV} = 0 \Rightarrow \gamma P - \alpha V = 0 \Rightarrow \gamma(P_0 - \alpha V) = \alpha V$

$$\Rightarrow V = \frac{\gamma P_0}{\alpha(1+\gamma)}$$

---

9. Black Body Radiation

Q1. The blackbody at a temperature of $6000\,K$ emits a radiation whose intensity spectrum peaks at $600\,nm$. If the temperature is reduced to $300\,K$, the spectrum will peak at,

(a) $120\,\mu m$ (b) $12\,\mu m$ (c) $12\,mm$ (d) $120\,mm$

JEST-2015

Q2. Two compartments in a cylinder with uniform cross section and total length $102\,cm$ are separated by a sliding partition which can move but does not allow heat to pass across it. No molecules are present in either of the compartments. The radiation inside each compartment is in thermal equilibrium with its walls. The walls at the two ends of the cylinder are maintained at temperatures $2000\,K$ and $4000\,K$, respectively. The sides are perfectly insulated. Find the location of the partition, measured from the left end of the container.

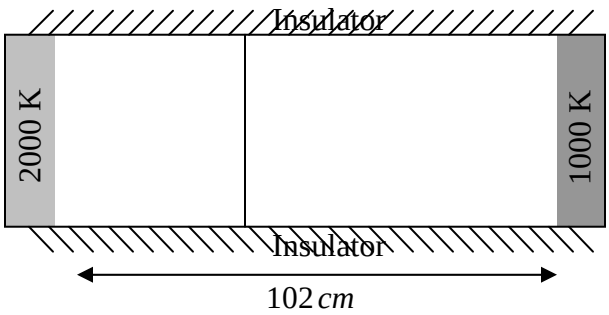

JEST-2020

(Solution)

9. Black Body Radiation

Ans. 1: (b)

Solution: $\lambda_1 T_1 = \lambda_2 T_2 \Rightarrow \lambda_2 = \frac{\lambda_1 T_1}{T_2} = \frac{600 \times 6000}{300} = 12000\ nm = 12\ \mu m$

Ans. 2: 0006

Solution: It is insulated from all sides, so the partition will move where the radiation will move where the radiation pressure is some on both sides.

$$\frac{kT_1^4}{x} = \frac{kT_2^4}{102 - x}$$

where x is the distance from left

$$\frac{k(2000)^4}{x} = \frac{k(4000)^4}{102 - x}$$

$$\frac{102 - x}{x} = 16$$

$$x = 6$$

---

10. Probability Distribution

Q1. The persons named $A, B, C, D, E, F, G, H, I, J$ have come for an interview. They are being called one by one to the interview panel at random. What is the probability that C gives interview before A and A gives before F ?

(a) $\frac{1}{6}$ (b) $\frac{1}{10}$ (c) $\frac{1}{8}$ (d) $\frac{1}{4}$

JEST-2020

Q2. If x and y have the joint probability distribution $f(x,y)=\frac{3}{4}+xy$ for $0<x,y<1$, and $f(x,y)=0$ otherwise. What is the probability that y assumes a value greater than $\frac{1}{2}$, given that x is equal to $\frac{1}{2}$

(a) $\frac{6}{16}$ (b) $\frac{7}{16}$ (c) $\frac{8}{16}$ (d) $\frac{9}{16}$

JEST-2020

Q3. A particle is moving on a one-dimensional discrete lattice with lattice spacing unity. It can move from a site to its nearest neighbour site every $1/5$ seconds with p being the probability to move right and $q=(1-p)$ being the probability to move left. Consider that the particle starts at origin, $x=0$ at time $t=0$. Taking $p=\frac{3}{4}$, calculate the variance $\left\langle \left(x-\langle x\rangle\right)^2 \right\rangle$ at time $t=5\times10^4$ seconds, where $\langle x\rangle$ is the average position.

JEST-2020

(Solution)

10. Probability Distribution

Ans. 1: (a)

Solution: $P = \frac{1}{3!} = \frac{1}{6}$

Ans. 2: (d)

Solution: $\int_{1/2}^{1} \left(\frac{3}{4} + xy \right) dy = \frac{3}{8} + \frac{3}{8} x$

$$x = \frac{1}{2}$$

$$\frac{3 \times 2}{8 \times 2} + \frac{3}{16} = \frac{9}{16}$$

Ans. 3: 7500

Solution:

---

11. Maxwell Boltzmann

Q1. Consider a uniform distribution of particles with volume density n in a box. The particles have an isotropic velocity distribution with constant magnitude v. The rate at which the particles will be emitted from a hole of area A on one side of this box is

(a) nvA (b) $nv\frac{A}{2}$ (c) $nv\frac{A}{4}$ (d) none of the above

JEST-2013

---

11. Maxwell Boltzmann (Solution)

Ans. 1: (c)

---

12. Others

Q1. The temperature of a thin bulb filament (assuming that the resistance of the filament is nearly constant) of radius r and length L is proportional to

(a) $r^{1/4}L^{-1/2}$ (b) $L^2 r$ (c) $L^{1/4}r^{-1}$ (d) $r^2 L^{-1}$

JEST-2014

Q2. Some bacteria are added to a bucket at time 10 am. The number of bacteria doubles every minute and reaches a number 16×10^{15} at $10:18$ am. How many seconds after 10 am were there 25×10^{13} bacteria?

JEST-2020

Q3. A carbon rod of resistance R_c and a metal rod of resistance R_m are connected in series. Let their linear temperature coefficients of resistivity have magnitudes α_c and α_m, respectively. The condition that the net resistance would be independent of temperature is

(a) $R_c = R_m$ (b) $\alpha_c = \alpha_m$ (c) $\frac{R_c}{R_m} = \frac{\alpha_m}{\alpha_c}$ (d) $\frac{R_m}{R_c} = \frac{\alpha_m}{\alpha_c}$

JEST-2020

---

12. Others (Solution)

Ans. 1: (a)

Ans. 2: 0720

Solution: $N = N_0 2^T$

$16\times10^{15} = 25\times10^{13}2^T$

$T = 6Minute$

$T = 360Sec$

so after 10am 720 seconds

Ans. 3: (c)

Solution: $R_c(T) = R_c\left[1+\alpha_c\left(T-T_{ref}\right)\right]$

and $R_m(T) = R_m\left[1+\alpha_m\left(T-T_{ref}\right)\right]$

Here, T_{ref} is the reference temperature that α is specified at for the metal.

The net resistance of the metals connected in series is

$$R(T) = R_c(T)+R_m(T) = R_c\left[1+\alpha_c\left(T+\alpha_c\left(T-T_{ref}\right)\right)\right]+R_m\left[1+\alpha_m\left(T-T_{ref}\right)\right]$$

$\frac{dR(T)}{dT} = 0$; If $R(T)$ is independent of temperature

$$\therefore \frac{dR(T)}{dT} = R_c\alpha_c + R_m\alpha_m = 0$$

$$\Rightarrow \frac{R_c}{R_m} = \frac{-\alpha_m}{\alpha_c}$$

Thus correct option is (c)

Practice Set - Electronics and Experimental Method

JEST Previous Year Question

(2012 To 2020)

S.NO	Topic	Number of Question
1.	Network Analysis	05
2.	Semiconductor Physics	01
3.	Basics of pn junction diode and DC Analysis	03
4.	Rectifier and Clipper Circuit ,Clipper Circuit	01
5.	Zener Diode, other diode	0
6.	Basics of Transistors and DC Biasing	05
7.	AC Analysis of Transistors	0
8.	Basics of Operational Amplifier	04
9.	Op-Amp Integrator, Differentiator, Rectifier	0
10.	Op-Amp Comparator, Filter, Oscillator	0
11.	Digital Basics and Combinational Ciruit	04
12.	Flip-Flop and their applications	0
13.	Digital to Analog Converter	02
14.	Error Analysis	02
15.	Experimental Techniques	0
Total Number of Questions		27

1.Network Analysis

Q1. The ratio of maximum to minimum resistance that can be obtained with N 1-Ω resistors is

(a) N (b) N^2 (c) 1 (d) ∞

JEST-2012

Q2. The ratio of maximum to minimum resistance that can be obtained with N number of $3-\Omega$ resistors is

(a) N (b) N^2 (c) N^3 (d) N^4

JEST-2020

Q3. A 100 ohms resistor carrying current of 1 Amp is maintained at a constant temperature of $30^{\circ}C$ by a heat bath. What is the rate of entropy increase of the resistor?

(a) 3.3 Joules/K/sec

(b) 6.6 Joules/K/sec

(c) 0.33 Joules/K/sec

(d) None of the above

JEST-2014

Q4. It is found that when the resistance R indicated in the figure below is changed from $1\ k\Omega$ to $10\ k\Omega$ the current flowing through the resistance R' does not change. What is the value of the resistor R'?

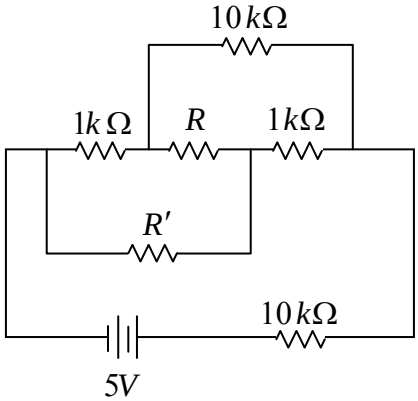

(a) $5\ k\Omega$

(b) $100\ k\Omega$

(c) $10\ k\Omega$

(d) $1\ k\Omega$

JEST-2016

Q5. In the circuit shown below, the capacitor is initially uncharged. Immediately after the key K is closed, the reading in the ammeter is $27\ mA$.

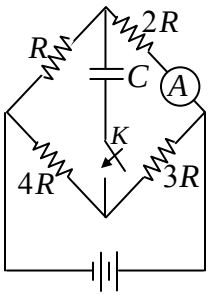

What will the reading (in mA) be a long time later?

JEST-2018

1.Network Analysis (Solution)

Ans. 1: (b)

Solution: Resistance in series is maximum and minimum in parallel combination

$$R_s = 1+1+1+1+.....N = N$$

$$\frac{1}{R_p} = \frac{1}{1}+\frac{1}{1}+\frac{1}{1}+\frac{1}{1}+\frac{1}{1}..... = N$$

$$\frac{R_s}{R_p} = N \times N = N^2$$

Ans. 2: (b)

Solution: Resistance in series is maximum and minimum in parallel.

$$R_s = 3+3+3+3+.....3N = 3N$$

$$\frac{1}{R_p} = \frac{1}{3}+\frac{1}{3}+\frac{1}{3}..... = \frac{N}{3} \Rightarrow R_p = \frac{1}{N}$$

$$\frac{R_s}{R_p} = \frac{3N}{3/N} = N^2$$

Ans. 3: (c)

Solution: $W = qV \Rightarrow W = itV \Rightarrow W = i^2Rt$.

Now, $\frac{\partial W}{\partial T} = \frac{i^2Rt}{T} = \frac{1\times 100}{30+273} = 0.33$

Ans. 4: (b)

Solution: Apply Wheatstone bridge condition

$$\frac{R_1}{R_2} = \frac{R_3}{R_4} \Rightarrow \frac{1}{R'} = \frac{10}{1}$$

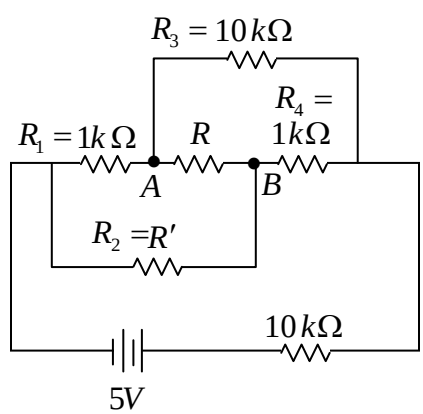

Ans. 5: 30

Solution: Immediately after the key K is closed, capacitor is short circuited. Using KCL

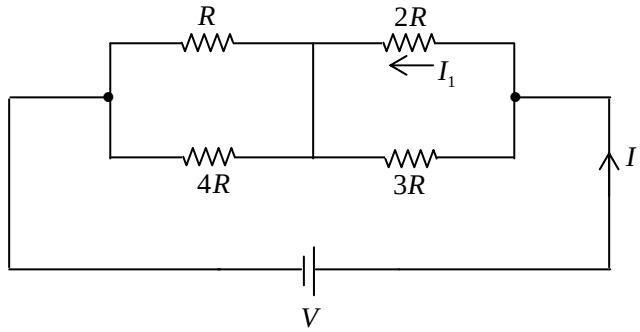

$$I_1 = \frac{3R}{5R} \times I = 27\,mA \Rightarrow I = 45\,mA.$$

$$R_{eq} = \frac{2R \times 3R}{5R} + \frac{R \times 4R}{5R} = 2R$$

Thus $V = IR_{eq} = 90R$

After long time, capacitor is open circuited.

Using KCL

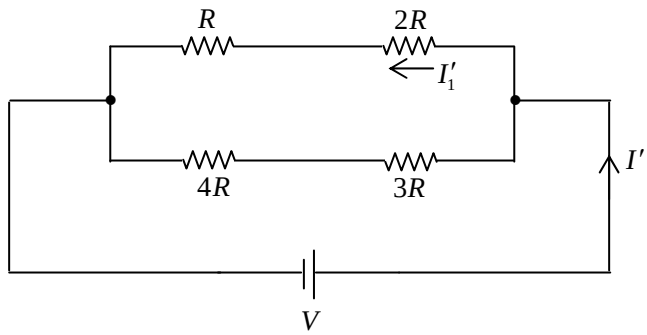

$$R_{eq} = \frac{3R \times 7R}{10R} = \frac{21}{10}R$$

$$I' = \frac{V}{R_{eq}} = \frac{90R}{21R/10} = \frac{300}{7}mA$$

$$I_1' = \frac{7R}{10R} \times \frac{300}{7}mA = 30\,mA.$$

---

2. Semiconductor Physics

Q1. The net charge of an n-type semiconductor is

(a) positive (b) zero (c) negative (d) dependent

JEST-2012

---

2. Semiconductor Physics (Solution)

Ans. 1: (b)

---

3. Basics of pn junction diode and DC Analysis

Q1. A Germanium diode is operated at a temperature of 27 degree C. The diode terminal voltage is $0.3\,V$ when the forward current is $10\ mA$. What is the forward current (in mA) if the terminal voltage is $0.4\,V$?

(a) 477.3 (b) 577.3 (c) 47.73 (d) 57.73

JEST-2018

Q2. The circuit given below is fed by a sinusoidal voltage $V_{in} = V_0 \sin \omega t$. Assume that the cut-in voltage of the diode is 0.7 volts and V_1 is a positive dc voltage smaller than V_0. Which one of the following statements is true about V_{out}?

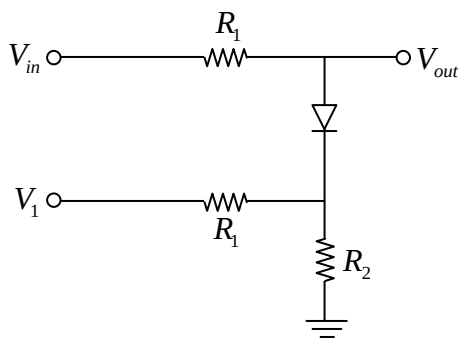

(a) Positive part of V_{out} is restricted to a maximum voltage of $0.7 + \frac{R_2}{R_1 + R_2} V_1$

(b) Negative part of V_{out} is restricted to a maximum voltage of $0.7 + \frac{R_2}{R_1 + R_2} V_1$

(c) Positive part of V_{out} is restricted to a maximum voltage of $0.7 + \frac{R_1}{R_1 + R_2} V_1$

(d) Negative part of V_{out} is restricted to a maximum voltage of $0.7 + \frac{R_1}{R_1 + R_2} V_1$

JEST-2019

Q3. Consider the circuit shown in the figure where $R_1 = 2.07\,k\Omega$ and $R_2 = 1.93\,k\Omega$. Current source I delivers $10\,mA$ current. The potential across the diode D is $0.7V$. What is the potential at A?

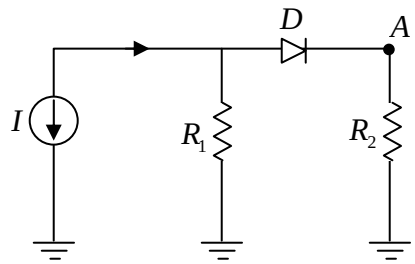

(a) $10.35V$ (b) $9.65V$

(c) $19.30V$ (d) $4.83V$

JEST-2017

---

3. Basics of pn junction diode and DC Analysis (Solution)

Ans. 1: (a)

Solution: $I = I_0\left(e^{V/V_T} - 1\right) \approx I_0 e^{V/V_T}$ where $V_T = \dfrac{kT}{e} = 0.026V$

$$\Rightarrow 10\,mA = I_0 e^{0.3/0.026} = I_0 e^{11.54} \Rightarrow I_0 = \frac{10}{102744}mA$$

Thus, $I = I_0 e^{0.4/0.026} = \dfrac{10}{102744} \times 4876800\ mA \approx 474.6\ mA$

Ans. 2: (a)

Solution: Reference voltage $V_R = \dfrac{R_2}{R_1 + R_2}V_1$ and diode will be ON when $V_{\text{in}} > \left(0.7 + \dfrac{R_2}{R_1 + R_2}V_1\right)$.

Ans. 3: (b)

Solution: Apply KVL in loop I

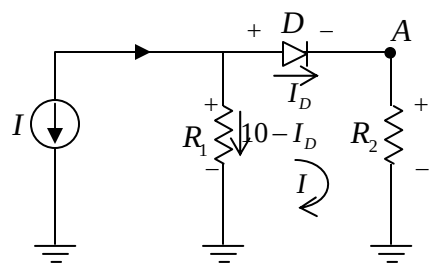

$$0.7 + I_D R_2 - \left(10 - I_D\right)R_1 = 0$$

$$\Rightarrow 0.7 + I_D \times 1.93 - \left(10 - I_D\right) \times 2.07 = 0$$

$$\Rightarrow I_D = 5\,mA \Rightarrow V_A = I_D R_2 = 5\,mA \times 1.93\,k\Omega = 9.65V$$

---

4. Rectifier and Clipper Circuit ,Clipper Circuit

Q1. In the following silicon diode circuit $(V_B = 0.7V)$, determine the output voltage waveform (V_{out}) for the given input wave.

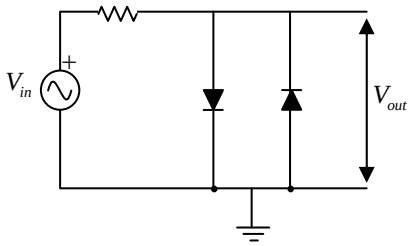

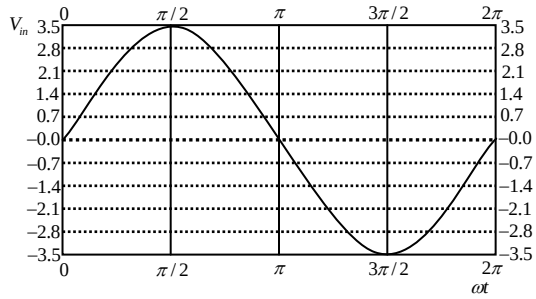

(a)

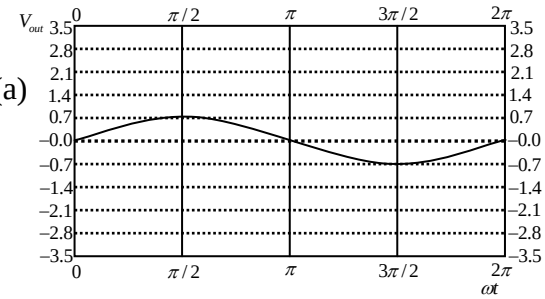

(b)

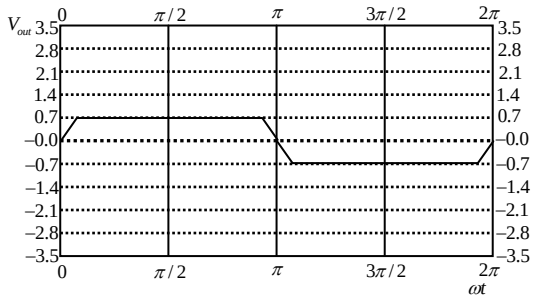

(c)

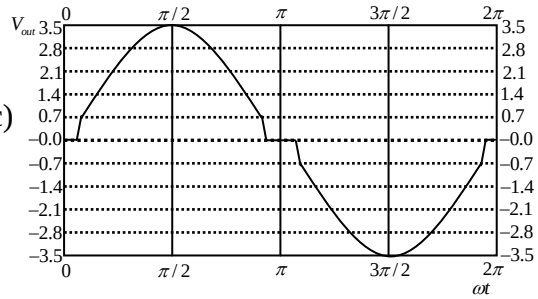

(d)

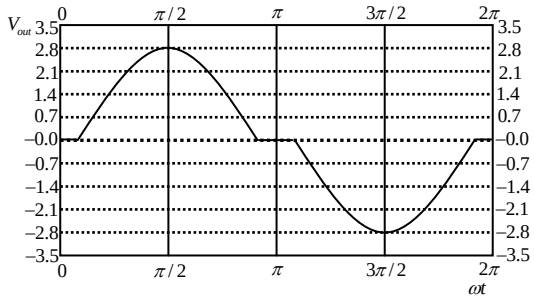

JEST-2017

(Solution)

4. Rectifier and Clipper Circuit ,Clipper Circuit

Ans. 1: (b)

Solution: Transition voltage $V_T = \pm 0.7V$

When diodes are ON, output voltage will be either $+0.7V$ and $-0.7V$.

---

6. Basics of Transistors and DC Biasing

Q1. Calculate the collector current and determine whether or not the transistor in figure shown below is in saturation. Assume $V_{CE}(sat) = 0.2V$

(a) $6.5\,mA$, not in saturation

(b) $11.5\,mA$, in saturation

(c) $11.5\,mA$, not in saturation

(d) $6.5\,mA$, in saturation

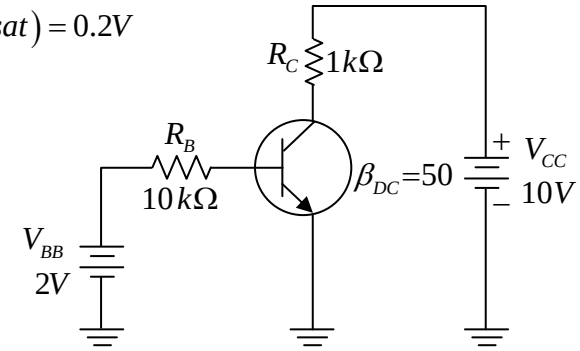

JEST-2020

Q2. A transistor in common base configuration has ratio of collector current to emitter current β and ratio of collector to base current α. Which of the following is true?

(a) $\beta = \dfrac{\alpha}{(\alpha+1)}$ (b) $\beta = \dfrac{(\alpha+1)}{\alpha}$ (c) $\beta = \dfrac{\alpha}{(\alpha-1)}$ (d) $\beta = \dfrac{(\alpha-1)}{\alpha}$

JEST-2016

Q3. Consider the transistor circuit shown in the figure. Assume $V_{BEQ} = 0.7\,V, V_{BB} = 6V$ and the leakage current is negligible. What is the required value of R_B in kilo-ohms if the base current is to be $4\,\mu A$?

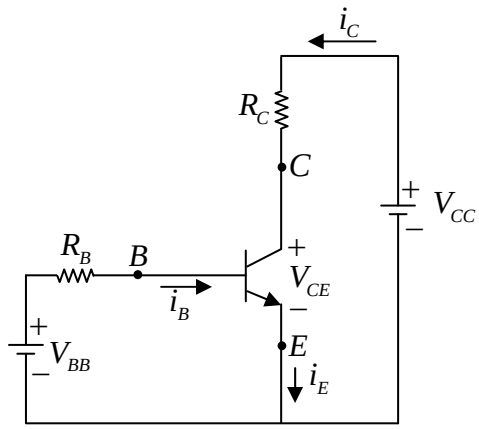

JEST-2018

Q4. Analyse the common emitter transistor circuit given in the figure. If the current gain (β) increases by 50%, the relative change in collector current (I_C) is approximately

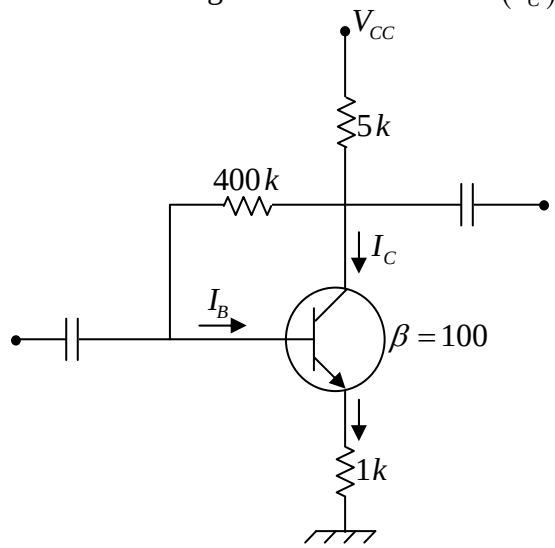

(a) 5% (b) 15% (c) 20% (d) 25%

JEST-2020

Q5. What is the DC base current (approximated to nearest integer value in μA) for the following n-p-n silicon transistor circuit, given $R_1 = 75\Omega, R_2 = 4.0k\Omega, R_3 = 2.1k\Omega$, $R_4 = 2.6k\Omega$, $R_5 = 6.0k\Omega$, $R_6 = 6.8k\Omega$, $C_1 = 1\mu F$, $C_2 = 2\mu F$, $V_C = +15V$ $\beta_{dc} = 75$?

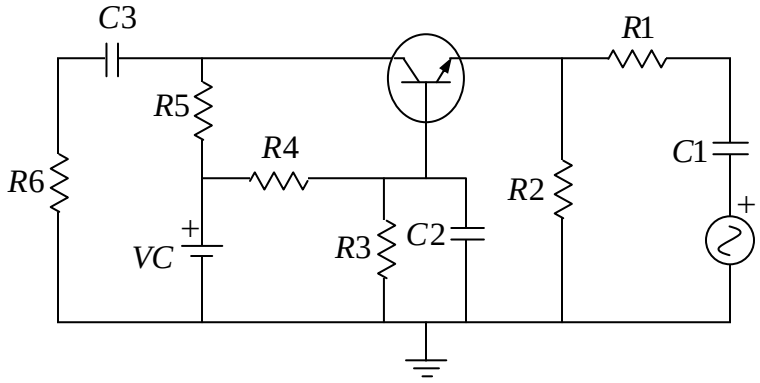

(a) 20 (b) 24 (c) 16 (d) 32

JEST-2017

---

6. Basics of Transistors and DC Biasing (Solution)

Ans. 1: (a)

Solution: Emitter base junction is forward bias.

$$I_B = \frac{2V - 0.7V}{10k} = 0.13\,mA \Rightarrow I_C = \beta I_B = 6.5\,mA$$

$$V_B = V_{BE} = 0.7V \text{ and } V_C = V_{CC} - I_C R_C = 10V - (6.5\times 1)V = 3.5V$$

$$\Rightarrow V_{CB} = V_C - V_B = 3.5V - 0.7V = 2.8V = +ve \text{ (Collector base junction reverse bias)}$$

Thus transistor is in active region.

Ans. 2: (a)

Solution: $\because I_E = I_C + I_B \Rightarrow \frac{I_E}{I_C} = 1 + \frac{I_B}{I_C} \Rightarrow \frac{1}{\beta} = 1 + \frac{1}{\alpha} \Rightarrow \beta = \frac{\alpha}{1+\alpha}$

Ans. 3: 1325

Solution: Apply LVL in input section

$$-V_{BB} + I_B R_B + V_{BE} = 0 \Rightarrow R_B = \frac{V_{BB} - V_{BE}}{I_B} = \frac{6V - 0.7V}{4\times 10^{-3} mA}(k\Omega) = 1325\,k\Omega$$

Ans. 4: (b)

Solution: $I_C = \frac{V_{CC} - V_{BE}}{5k + 1k + \frac{400k}{100}} = \frac{V_{CC} - V_{BE}}{10k}$ and $I'_C = \frac{V_{CC} - V_{BE}}{5k + 1k + \frac{400k}{150}} = \frac{V_{CC} - V_{BE}}{8.66k}$.

Thus $\frac{I_C - I'_C}{I_C} \times 100\% \approx 15\%$.

Ans. 5: (a)

Solution:

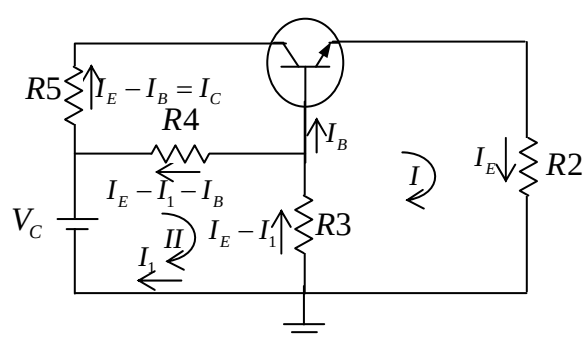

Apply KVL in Loop I; $I_E R_2 + (I_E - I_1) R_3 + V_{BE} = 0$

Apply KVL in Loop II; $-V_C-\left(I_E-I_1-I_B\right)R_4-\left(I_E-I_1\right)R_3=0$

$$-V_C-\left(I_E-I_1\right)R_4-\left(I_E-I_1\right)R_3=0\Rightarrow I_E-I_1=-\frac{V_C}{R_3+R_4}$$

From Loop I; $\beta I_B R_2-\frac{V_C}{R_3+R_4}R_3=0\Rightarrow I_B=\frac{V_C}{R_3+R_4}\frac{R_3}{\beta R_2}$ $\qquad \because V_{BE}=0$

$$\Rightarrow I_B=\frac{15}{2.1+2.6}\frac{2.1}{75\times 4}\approx 21\,\mu A$$

---

8. Basics of Operational Amplifier

Q1. What is the voltage at the output of the following operational amplifier circuit. [See in the figure]?

(a) $1V$

(b) $1mV$

(c) $1\mu V$

(d) $1nV$

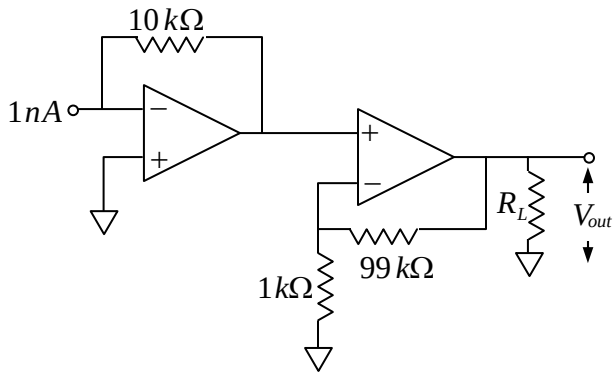

JEST-2015

Q2. Consider a 741 operational amplifier circuit as shown below, where $V_{CC} = V_{EE} = +15V$ and $R = 2.2\,k\Omega$. If $v_I = 2mV$, what is the value of v_0 with respect to the ground?

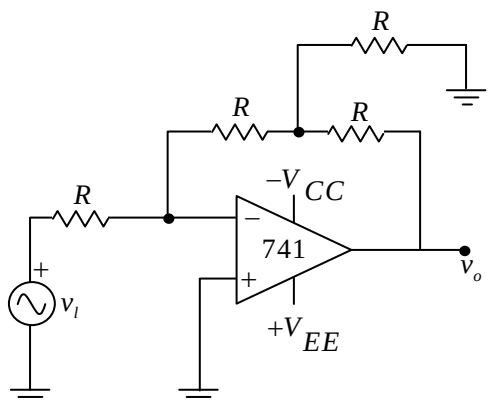

(a) $-1mV$ (b) $-2mV$ (c) $-3mV$ (d) $-4mV$

JEST-2017

Q3. Analyse the ideal op-amp circuit in the figure. Which one of the following statements is true about the output voltage V_{out}, when terminal 'C' is connected to point 'A' and then to point 'B'?

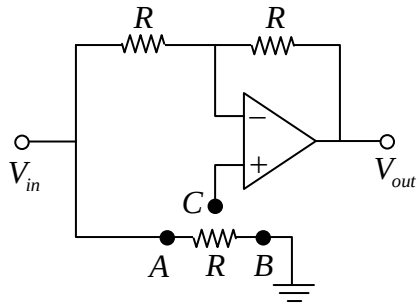

(a) $V_{\text{out}} = V_{\text{in}}$ and $V_{\text{out}} = -V_{in}$ when 'C' is connected to 'A' and 'B', respectively

(b) $V_{\text{out}} = -V_{in}$ and $V_{\text{out}} = V_{\text{in}}$ when 'C' is connected to 'A' and 'B', respectively

(c) $V_{\text{out}} = -V_{in}$ when 'C' is connected to either 'A' or 'B'

(d) $V_{\text{out}} = V_{\text{in}}$ when 'C' is connected to either 'A' or 'B'

JEST-2019

Q4. Analyse the op-amp circuit shown in the figure below. What is the output voltage (V_0) in millivolts if $V_1 = 2.5V$ and $V_2 = 2.25V$?

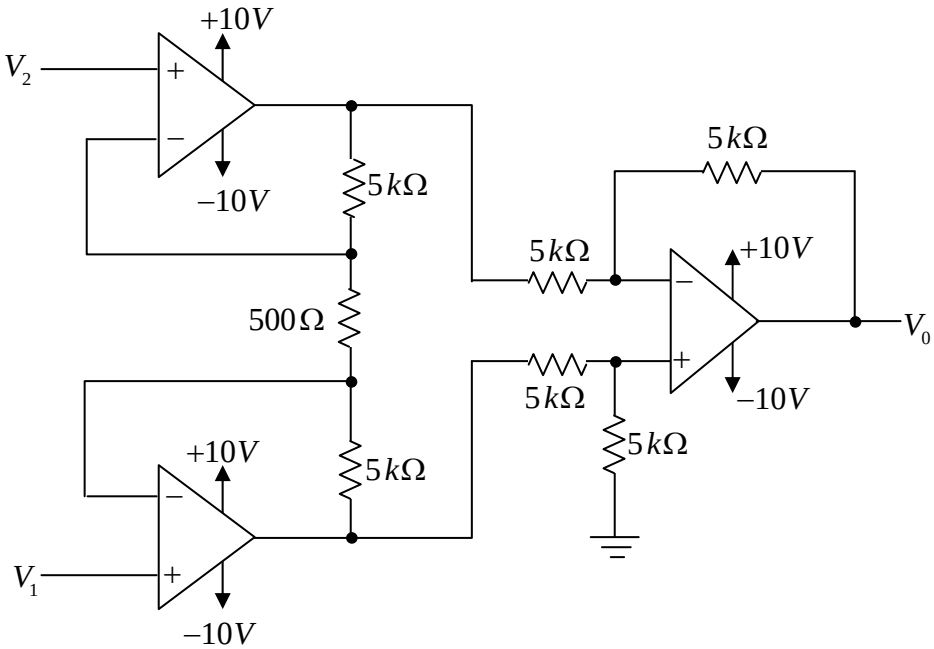

JEST-2020

---

8. Basics of Operational Amplifier (Solution)

Ans. 1: (b)

Solution: Output of first Op-Amp $v_{01} = -\left(10\times10^{3}\right)\left(1\times10^{-9}\right) = -10^{-5}\,volt$

Output of first Op-Amp $v_{out} = \left(1+\frac{99}{1}\right)\times10^{-5} = 10^{-3}\ volts = 1mV$

Ans. 2: (c)

Solution: Apply KCL;

$$I_1 = I_2 \Rightarrow \frac{v_i - 0}{R} = \frac{0 - v_0}{3R/2}$$

$$\Rightarrow v_0 = -\frac{3}{2}v_i = -\frac{3}{2}\times 2 = -3mV$$

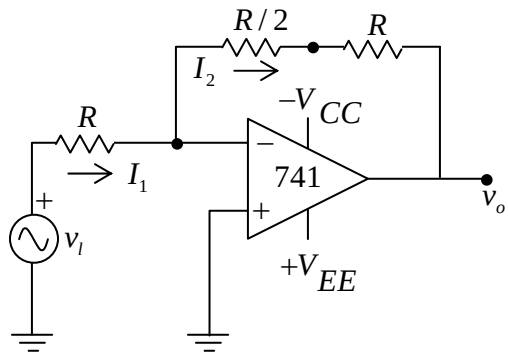

Ans. 3: (a)

Solution: When terminal 'C' is connected to point 'A'

$$V_{out} = \left(1+\frac{1}{1}\right)V_{in} - \frac{1}{1}V_{in} = V_{in}$$

When terminal 'C' is connected to point 'B'

$$V_{out} = -\frac{1}{1}V_{in} = -V_{in}$$

Ans. 4: 5305

Solution:

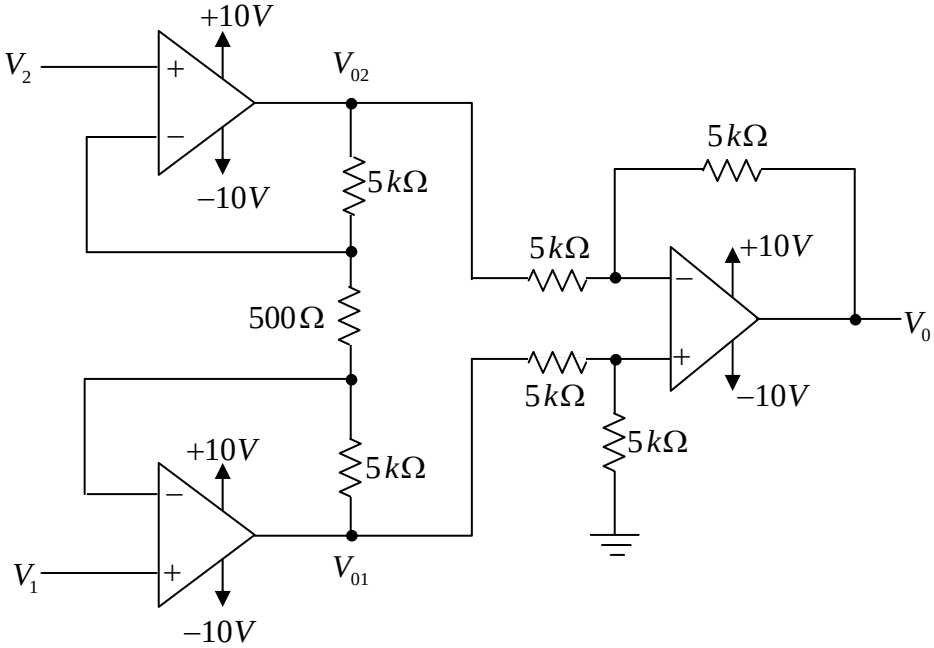

From Superposition Theorem

$$V_{02} = V_2' + V_{01}' = \left(1+\frac{5}{5.5}\right)V_2 - \frac{5}{5.5}V_{01} = 1.91V_2 - 0.91V_{01}$$

$$V_{01} = V_1' + V_{02}' = \left(1+\frac{5}{5.5}\right)V_1 - \frac{5}{5.5}V_{02} = 1.91V_1 - 0.91V_{02}$$

Thus $V_{01} - V_{02} = \left(1.91V_1 - 0.91V_{02}\right) - \left(1.91V_2 - 0.91V_{01}\right)$

$$\Rightarrow V_{01} - 0.91V_{01} - V_{02} + 0.91V_{02} = 1.91V_1 - 1.91V_2$$

$$\Rightarrow 0.09V_{01} - 0.09V_{02} = 1.91V_1 - 1.91V_2 \Rightarrow V_{01} - V_{02} = \frac{1.91}{0.09}\left(V_1 - V_2\right)$$

$$\Rightarrow V_{01} - V_{02} = \frac{1.91}{0.09}\left(2.5V - 2.25V\right) = 5.305V$$

Now

$$V_0 = V_{02}'' + V_{01}'' = -\frac{5}{5}V_{02} + \left(1+\frac{5}{5}\right)\frac{5}{5+5}V_{01} = -V_{02} + V_{01} = V_{01} - V_{02}$$

$$\Rightarrow V_0 = V_{01} = V_{01} - V_{02} = 5.305V = 5305\,mV$$

---

11. Digital Basics and Combinational Circuit

Q1. The $2's$ compliment of 1111 1111 is

(a) 0000 0001 (b) 0000 0000 (c) 1111 1111 (d) 1000 0000

JEST-2020

Q2. Which of the following circuits will act like a 4-input NAND gate?

(a)
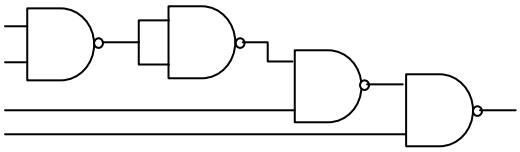

(b)
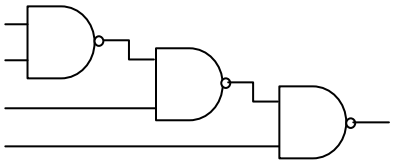

(c)
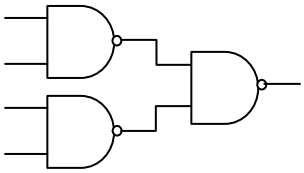

(d)
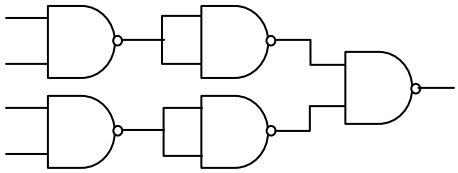

JEST-2014

Q3. For the logic circuit shown in figure, the required input condition (A, B, C) to make the output $(X) = 1$ is,

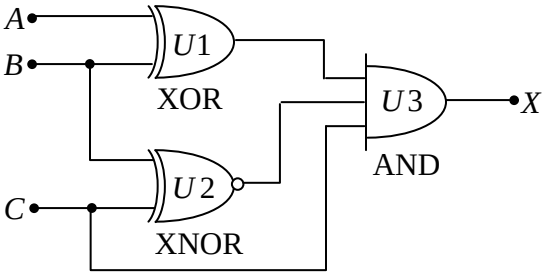

(a) 1,0,1

(b) 0,0,1

(c) 1,1,1

(d) 0,1,1

JEST-2015

Q4. What is Y for the circuit shown below?

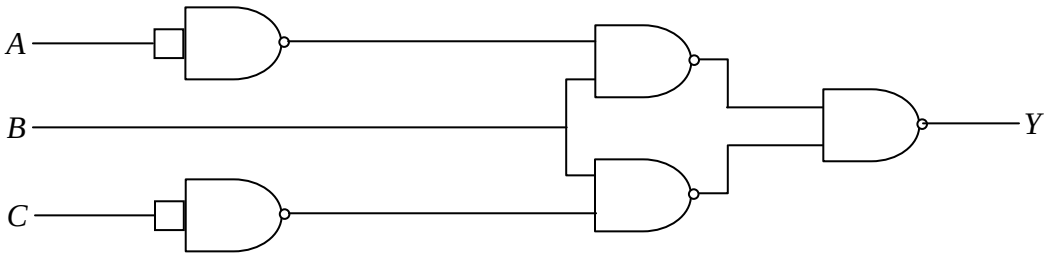

(a) $Y = \overline{(A+\bar{B})(\bar{B}+C)}$ (b) $Y = \overline{(A+\bar{B})(B+C)}$

(c) $Y = \overline{(\bar{A}+B)(\bar{B}+C)}$ (d) $Y = \overline{(A+B)(\bar{B}+C)}$

JEST-2017

---

11. Digital Basics and Combinational Circuit (Solution)

Ans. 1: (a)

Solution: $(1111\,1111)_2 \rightarrow 1^{st}$ compliment $(0000\ 0000)_2$

2^{s} compliment $= 1^{st}$ comp.$+1 = (0000\ 0001)_2$

Ans. 2: (d)

Solution:

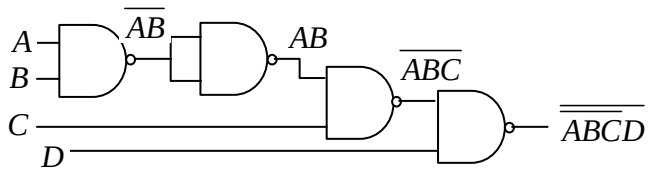

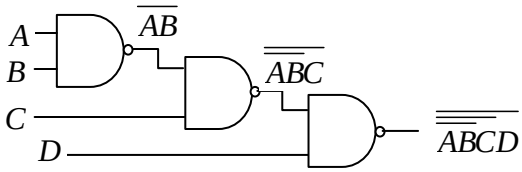

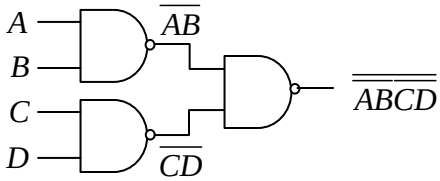

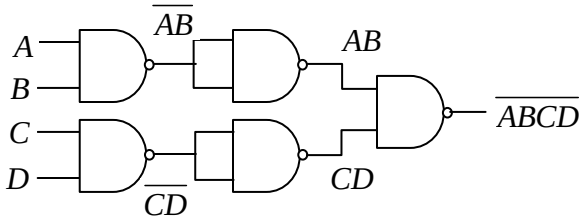

Ans. 3: (d)

Solution: XOR is inequality comparator and XNOR is equality comparator. In AND gate output will be high when all the input is 1.

Ans. 4: (a)

Solution:

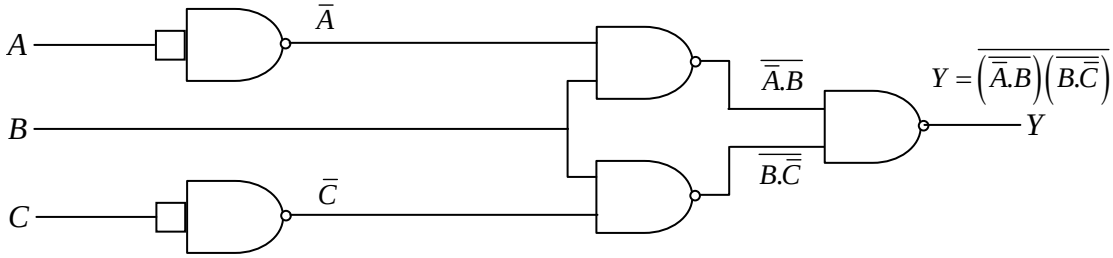

$$Y = \overline{\left(\overline{\bar{A}.B}\right).\left(\overline{B.\bar{C}}\right)} = \overline{\left(A+\bar{B}\right)\left(\bar{B}+C\right)}$$

---

13. Digital to Analog Converter

Q1. The reference voltage of an analog to digital converter is $1\,V$. The smallest voltage step that the converter can record using a 12-bit converter is,

(a) $0.24V$ (b) $0.24\,mV$ (c) $0.24\,\mu V$ (d) $0.24\,nV$

JEST-2015

Q2. A 16- bit analog to digital converter works in the range $0-1$ Volt. The least count of the converter is

(a) $0.30\,mV$ (b) $15.26\,mV$ (c) $5.44\,nV$ (d) $15.26\,\mu V$

JEST-2020

---

13. Digital to Analog Converter (Solution)

Ans. 1: (b)

Solution: Smallest voltage step $= \frac{1}{2^{12}-1} \approx 0.24\ mV$

Ans. 2: (d)

Solution: Least count $= \frac{V_{\max}}{2^n} = \frac{1V}{2^{16}} = \frac{1V}{65536} \approx 15.26\ \mu V$

---

14. Error Analysis

Q1. The formula for normal strain in a longitudinal bar is given by $\varepsilon = \frac{F}{AE}$, where F is normal force applied, A is cross-sectional area of the bar and E is Young's modulus. If $F = 50 \pm 0.5N$, $A = 0.2 \pm 0.002\,m^2$ and $E = 210 \times 10^9 \pm 1 \times 10^9$ Pa, the maximum error in the measurement of strain is

(a) 1.0×10^{-12} (b) 2.95×10^{-11} (c) 1.22×10^{-9} (d) 1.19×10^{-9}

JEST-2014

Q2. In Millikan's oil drop experiment the electronic charge e could be written as $k\eta^{1.5}$,where k is a function of all experimental parameters with negligible error. If the viscosity of air η is taken to be 0.4% lower than the actual value, what would be the error in the calculated value of e?

(a) 1.5% (b) 0.7% (c) 0.6% (d) 0.4%

JEST-2015

---

14. Error Analysis (Solution)

Ans. 1: (b)

Solution: $\varepsilon = \frac{F}{AE} \Rightarrow \frac{\Delta\varepsilon}{\varepsilon} = \frac{\Delta F}{F} + \frac{\Delta A}{A} + \frac{\Delta E}{E} = \frac{0.5}{50} + \frac{.002}{0.2} + \frac{1\times10^9}{210\times10^9}$

$$\frac{\Delta\varepsilon}{\varepsilon} = 0.02476 \Rightarrow \Delta\varepsilon = 0.2476\times\varepsilon = \frac{0.2476\times50}{0.2\times210\times10^9} = 2.95\times10^{-11}$$

Ans. 2: (d)

Solution: Electronic charge is proportional to the viscosity i.e. $e = k\eta^{1.5} = k\eta^{3/2}$

Now error in the measurement of charge is $\sigma_e^2 = \left(\frac{\partial e}{\partial \eta}\right)^2 \sigma_\eta^2$

$\Rightarrow \sigma_e = \left(\frac{\partial e}{\partial \eta}\right)\sigma_\eta$, where $\frac{\partial e}{\partial \eta} = \frac{3}{2}k\eta^{1/2}$

$$\therefore \sigma_e = \left(\frac{3}{2}k\eta^{1/2}\right)\sigma_\eta = \frac{3}{2}k\eta^{3/2}\frac{\sigma_\eta}{\eta} = \frac{3}{2}e\frac{\sigma_\eta}{\eta} \Rightarrow \frac{\sigma_e}{e} = \frac{3}{2}\frac{\sigma_\eta}{\eta}$$

Given $\frac{\sigma_\eta}{\eta} = 0.4\%$

$\therefore \frac{\sigma_e}{e} = \frac{3}{2}\times0.4\% = 0.6\%$. Thus correct answer is option (c).

Practice Set – Solid State Physics

JEST Previous Year Question

(2012 To 2020)

S.NO	Topic	Number of Question
1.	Crystallography	05
2.	X-ray Diffraction and Reciprocal lattice	03
3.	Reciprocal Lattices	02
4.	Specific Heat of Solid	01
5.	Free Electron Theory	02
6.	Band Theory	02
Total Number of Question		15

1. Bravis Lattice and Crystal Structure

Q1. The number of different Bravais lattices possible in two dimensions is:

(a) 2 (b) 3 (c) 5 (d) 6

JEST-2016

Q2. A metal suffers a structural phase transition from face-centered cubic (FCC) to the simple cubic (SC) structure. It is observed that this phase transition does not involve any change of volume. The nearest neighbor distances d_{fcc} and d_{sc} for the FCC and the SC structures respectively are in the ratio $\left(\frac{d_{fcc}}{d_{sc}}\right)$ [Given $2^{\frac{1}{3}} = 1.26$]

(a) 1.029 (b) 1.122 (c) 1.374 (d) 1.130

JEST-2013

Q3. A flat surface is covered with non-overlapping disks of same size. What is the largest fraction of the area that can be covered?

(a) $\frac{3}{\pi}$ (b) $\frac{5\pi}{6}$ (c) $\frac{6}{7}$ (d) $\frac{\pi}{2\sqrt{3}}$

JEST-2013

Q4. Circular discs of radius 1 m each are placed on a plane so as to form a closely packed triangular lattice. The number of discs per unit area is approximately equal to

(a) $0.86\,m^{-2}$ (b) $0.43\,m^{-2}$ (c) $0.29\,m^{-2}$ (d) $0.14\,m^{-2}$

JEST-2014

Q5. The total number of Na^{+} and Cl^{-} ions per unit cell of $NaCl$ is,

(a) 2 (b) 4 (c) 6 (d) 8

(Solution)

1. Bravis Lattice and Crystal Structure

Ans. 1: (c)

Solution: Five Bravais lattices in $2D$ are:

(i) Square lattice

(ii) Rectangular (P) lattice

(iii) Rectangular (C) lattice

(iv) Hexagonal lattice

(v) Oblique lattice

Ans. 2: ()

Solution: Nearest neighbour in SC is a and $C.N = 6$

Nearest neighbour in FCC is $\frac{a}{\sqrt{2}}$ and $C.N = 12$

$$\frac{d_{fcc}}{d_{sc}} = \frac{\frac{a}{\sqrt{2}}}{a} = \frac{1}{\sqrt{2}} = \frac{1}{1.414} = 0.707$$

Ans. 3: (d)

Solution: In closed packed hexagonal lattice,

$$n_{eff} = \frac{1}{3}n_C + \frac{1}{2}n_f + 1\times n_i = \frac{1}{3}\times 6 + 1 = 3 \text{ and } a = 2r$$

Now, largest fraction of area i.e., packing fraction $= \frac{n_{eff}\times A}{6\times\frac{\sqrt{3}}{4}\times a^2} = \frac{3\times\pi r^2}{6\times\frac{\sqrt{3}}{4}\times(2r)^2} = \frac{\pi}{2\sqrt{3}}$

Ans. 4: (c)

Solution: For closely packed triangular lattice,

$$a = 2r, \quad r = 1 \quad n_{eff} = \frac{1}{6}\times n_C + \frac{1}{2}\times n_f + 1\times n_l$$

$$\Rightarrow n_{eff} = \frac{1}{6}\times 3 + 0\times\frac{1}{2} + 1\times 0 \Rightarrow n_{eff} = 0.5$$

$$\text{Occupancy} = \frac{n_{eff}}{A} \qquad (\because a = 2)$$

$$\Rightarrow \frac{0.5}{\frac{\sqrt{3}}{4}\times 2} = \frac{0.5}{\sqrt{3}} = 0.29\ m^{-2}$$

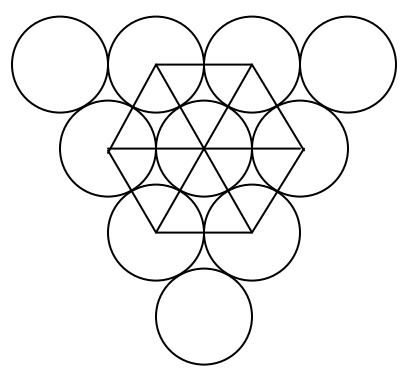

Closely packed hexagonal

Ans. 5: (d)

Solution: Total number of Na^+ and Cl^- ions per unit (d) is

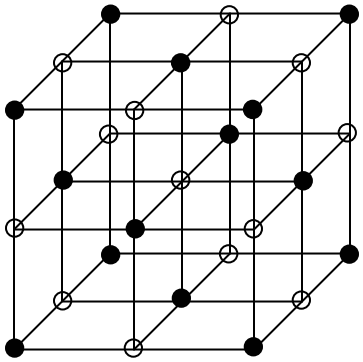

$$N_{Cl}^{-} = \frac{1}{8}n_c + \frac{1}{2}n_f\,, \quad N_{Na}^{+} = \frac{1}{4}n_e + 1\times n_i$$

where n_c = number of ions at corner

n_f = number of ions at face

n_e = number of ions at edges

n_i = number of ions inside

$$N = N_{Cl}^{-} + N_{Na}^{+} = \frac{1}{8}\times 8 + \frac{1}{2}\times 6 + \frac{1}{4}\times 12 + 1\times 1 = 1+3+3+1 = 8$$

● $\longrightarrow Cl^-$

○ $\longrightarrow Na^+$

---

2. X-ray Diffraction

Q1. A beam of X-rays is incident on a BCC crystal. If the difference between the incident and scattered wavevectors is $\vec{K} = n\hat{x} + k\hat{y} + l\hat{z}$ where $\hat{x}, \hat{y}, \hat{z}$ are the unit vectors of the associated cubic lattice, the necessary condition for the scattered beam to give a Laue maximum is

(a) $h + k + l = \text{even}$ (b) $h = k = l$

(c) h, k, l are all distinct (d) $h + k + l = \text{odd}$

JEST-2012

Q2. The second order maximum in the diffraction of X-rays of 0.20 nanometer wavelength from a simple cubic crystal is found to occur at an angle of thirty degrees to the crystal plane. The distance between the lattice planes is

(a) 1 Angstrom (b) 2 Angstrom (c) 4 Angstrom (d) 8 Angstrom

JEST-2012

Q3. For a 2 - dimensional honeycomb lattice as shown in the figure, the first Bragg spot occurs for the grazing angle θ_1, while sweeping the angle from 0°. The next Bragg spot is obtained at θ_2 given by

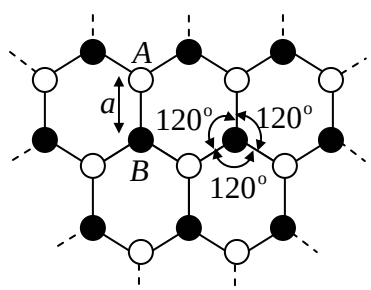

(a) $\sin^{-1}(3\sin\theta_1)$

(b) $\sin^{-1}\left(\frac{3}{2}\sin\theta_1\right)$

(c) $\sin^{-1}\left(\frac{\sqrt{3}}{2}\sin\theta_1\right)$

(d) $\sin^{-1}\left(\sqrt{3}\sin\theta_1\right)$

JEST-2015

(Solution)

2. X-ray Diffraction

Ans. 1: (a)

Solution: In BCC basis $(0,\quad 0,\quad 0),\left(\frac{1}{2},\quad \frac{1}{2},\quad \frac{1}{2}\right)$

Crystal structure factor (F) is defined as

$$F = f\cdot S = f\sum_{n=1}^{n_{eff}} e^{2\pi i\left(hu_n + kV_n + l\omega_n\right)} = f\left[e^{2\pi i(0)} + e^{2\pi i\left(\frac{1}{2}\right)[h+k+l]}\right] = f\left[1+e^{\pi i(h+k+l)}\right]$$

$F_{110} = 2f \Rightarrow I = 4f^2$, $F_{111} = 0 \Rightarrow I = 0$, $F_{200} = 2f \Rightarrow I = 4f^2$

Thus, if $h+k+l =$ even, then plane will be present.

If $h+k+l =$ odd, then plane will be absent.

Ans. 2: (c)

Solution: $2d\sin\theta = n\lambda \Rightarrow 2d\sin\theta = 2\lambda \Rightarrow 2\times d\times\sin 30^{\circ} = 2\times 0.2\times 10^{-9}\,m$

$$d = 2\times 0.2\times 10^{-9}\,m = 0.4\times 10^{-9}\,m = 4\times 10^{-10}\,m = 4A^{\circ}$$

Ans. 3: (c)

Solution: According to Bragg's law, the condition for first Bragg spot and second spot is

$$2d_1\sin\theta_1 = n\lambda \text{ and } 2d_2\sin\theta_2 = n\lambda$$

$$\therefore 2d_1\sin\theta_1 = 2d_2\sin\theta_2 \Rightarrow \theta_2 = \sin^{-1}\left(\frac{d_1}{d_2}\sin\theta_1\right)$$

For 2 - dimensional honeycomb lattice, the lattice constant 'a' and interplanar spacing 'd' is linked as

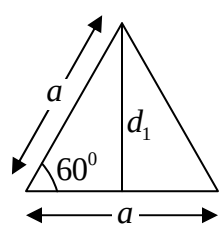

$$d_1^2 = a^2 - \left(\frac{a}{2}\right)^2 \Rightarrow d_1 = \sqrt{a^2 - \frac{a^2}{4}} = \frac{\sqrt{3}}{2}a \text{ and } d_2 = a$$

$$\therefore \theta_2 = \sin^{-1}\left(\frac{\sqrt{3}}{2}\sin\theta_1\right)$$

---

3. Reciprocal Lattices

Q1. What is the area of the irreducible Brillouin zone of the crystal structure as given in the figure?

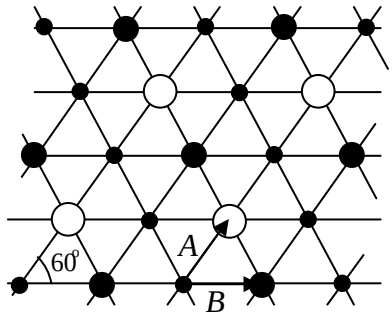

$|A| = |B| = A$

(a) $\frac{2\pi^2}{\sqrt{3}A^2}$

(b) $\frac{\sqrt{3}\pi^2}{2A^2}$

(c) $\frac{2\pi^2}{A^2}$

(d) $\frac{\pi^2}{\sqrt{3}A^2}$

JEST-2015

Q2. If $\vec{k}$ is the wavevector of incident light ($|\vec{k}| = \frac{2\pi}{\lambda}$, λ is the wavelength of light) and $\vec{G}$ is a reciprocal lattice vector, then the Bragg's law can be written as:

(a) $\vec{k} + \vec{G} = 0$

(b) $2\vec{k}.\vec{G} + G^2 = 0$

(c) $2\vec{k}.\vec{G} + k^2 = 0$

(d) $\vec{k}.\vec{G} = 0$

JEST-2016

---

3. Reciprocal Lattices (Solution)

Ans. 1: (a)

Solution: Area of the Brillouin zone can be related to the area of normal cell as

$$\text{Area of B.Z.} = \frac{\pi^2}{\text{Area of cell}} = \frac{\pi^2}{\left|\vec{A}\times\vec{B}\right|}$$

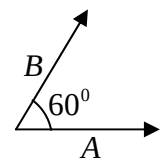

$$|A| = |B| = A$$

$$\vec{A}\times\vec{B} = |A||B|\sin\theta = A^2\sin\left(60^0\right) = \frac{\sqrt{3}}{2}A^2$$

$$\therefore\ \text{Area of Brillouin zone} = \frac{2\pi^2}{\sqrt{3}A^2}$$

Ans. 2: (b)

Solution: By means of Eward construction, we can write the Bragg's law in vector form

$$\vec{G} = OB,\ \vec{K}' = AO$$

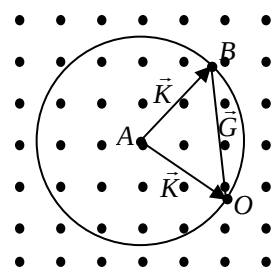

For diffraction it is necessary that vector $\vec{K}' + \vec{G}$, that is vector AB be equal in magnitude to the vector K or

$$\left(K+G\right)^2 = K^2 \Rightarrow 2\vec{K}\cdot\vec{G} + G^2 = 0$$

---

4. SPECIFIC HEAT OF SOLID

Q1. The Dulong –Petit law fails near room temperature (300 K) for many light elements (such as boron and beryllium) because their Debye temperature is

(a) $\gg 300K$ (b) $\sim 300K$ (c) $\ll 300K$ (d) $0K$

JEST-2012

---

4. SPECIFIC HEAT OF SOLID (Solution)

Ans. 1: (a)

---

5. FREE ELECTRON THEORY

Q1. An ideal gas of non-relativistic fermions in 3-dimensions is at 0K. When both the number density and mass of the particles are doubled, then the energy per particle is multiplied by a factor

(a) $2^{1/2}$ (b) 1 (c) $2^{1/3}$ (d) $2^{-1/3}$

JEST-2014

Q2. For non-interacting Fermions in $d-$dimensions, the density of states $D(E)$ varies as $E^{\left(\frac{d}{2}-1\right)}$. The Fermi energy E_F of an N particle system in 3–, 2– and 1–dimensions will scale respectively as,

(a) $N^2, N^{2/3}, N$ (b) $N, N^{2/3}, N^2$ (c) $N, N^2, N^{2/3}$ (d) $N^{2/3}, N, N^2$

JEST-2015

---

5. FREE ELECTRON THEORY (Solution)

Ans. 1: (d)

Solution: $E_F = \frac{\hbar^2}{2m}\left(3\pi^2 n\right)^{\frac{2}{3}}$ at $T = 0\,K$

$$\because n' = 2n \text{ and } m' = 2m \Rightarrow E_F' = \frac{\hbar^2}{4m}\left(3\pi^2 2n\right)^{2/3} = \frac{\hbar^2}{2m}\left(3\pi^2 n\right)^{2/3} \times 2^{-1/3}$$

Ans. 2: (d)

---

6. Band Theory of Solid

Q1. Given the tight binding dispersion relation $E(k) = E_0 + A\sin^2\left(\frac{ka}{2}\right)$, where E_0 and A are constants and a is the lattice parameter. What is the group velocity of an electron at the second Brillouin zone boundary?

(a) 0 (b) $\frac{a}{h}$ (c) $\frac{2a}{h}$ (d) $\frac{a}{2h}$

JEST-2015

Q2. When two different solids are brought in contact with each other, which one of the following is true?

(a) Their Fermi energies become equal

(b) Their band gaps become equal

(c) Their chemical potentials become equal

(d) Their work functions become equal

JEST-2014

(Solution)

6. Band Theory of Solid

Ans. 1: (a)

Solution: Group velocity is defined as, $v_g = \frac{1}{\hbar}\frac{dE}{dk}$

Since $E = E_0 + A\sin^2\left(\frac{ka}{2}\right) \Rightarrow \frac{dE}{dk} = aA\sin\left(\frac{ka}{2}\right)\cos\left(\frac{ka}{2}\right) = \frac{aA}{2}\sin ka$

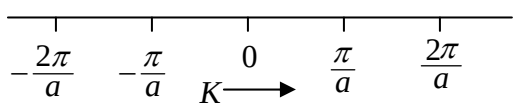

In one dimension, the Brillouin zone boundary is

The 1st Brillouin zone boundaries lie at $\pm\frac{\pi}{a}$

The 2nd Brillouin zone boundaries lie at $\pm\frac{2\pi}{a}$

Thus, the group velocity at the second Brillouin zone boundary is

$$v_g\Big|_{\pm\frac{2\pi}{a}} = \frac{aA}{2}\sin\left(\frac{2\pi}{a}\times a\right) = \frac{aA}{2}\sin 2\pi \Rightarrow v_g = 0$$

Ans. 2: (c)

Practice Set – Atomic and Molecular Physics

JEST Previous Year Question

(2012 To 2020)

1.	Bohr Theory	05
2.	Spin Orbit-Coupling	02
3.	LS Coupling and JJ Coupling	02
4.	Selection Rules and Atomic Life-Time	01
5.	Line Broadening	01
6.	X-Rays	01
7.	Rotational Spectra	01
8.	Vibrational Spectra	02
Total Number of Question		15

1. Bohr Models of Atoms

Q1. The binding energy of the hydrogen atom (electron bound to proton) is 13.6 eV. The binding energy of positronium (electron bound to positron) is

(a) 13.6 / 2 eV (b) 13.6 / 1810 eV

(c) 13.6×1810 eV (d) 13.6×2 eV

JEST 2012

Q2. If a proton were ten times, the ground state energy of the electron in a hydrogen atom would be

(a) less (b) more

(c) the same (d) less, more or equal depending on the electron mass

JEST 2013

Q3. If a proton were ten times lighter, then the ground state energy of the electron in a hydrogen atom would have been

(a) Less (b) More

(c) The same (d) Depends on the electron mass

JEST 2014

Q4. A hydrogen atom in its ground state is collided with an electron of kinetic energy 13.377 eV. The maximum factor by which the radius of the atom would increase is

(a) 7 (b) 8 (c) 49 (d) 64

JEST 2014

Q5. If the Rydberg constant of an atom of finite nuclear mass is αR_∞, where R_∞ the Rydberg constant corresponding to an infinite nuclear mass, the ratio of the electronic to nuclear mass of the atom is:-

(a) $\frac{(1-\alpha)}{\alpha}$ (b) $\frac{(\alpha-1)}{\alpha}$ (c) $(1-\alpha)$ (d) $\frac{1}{\alpha}$

JEST 2016

---

1. Bohr Models of Atoms (Solution)

Ans. 1: (a)

Solution: $E_n' = -\frac{13.6}{n^2}\frac{\mu}{m_e}$

$$\mu = \frac{m_e \cdot m_e}{m_e + m_e} = \frac{m}{2}$$

$E_n' = -\frac{13.6}{n^2}\cdot\frac{m_e}{2m_e} = -\frac{13.6}{2}\times\frac{1}{n^2}$. Thus binding energy will be $\frac{13.6}{2}eV$

Ans. 2: (b)

Solution: $E_n = \frac{-13.6}{n^2}\times\frac{0.99995\ \ m_e}{m_e} \Rightarrow -13.59932 \qquad \because \mu = 0.99995 m_e$

Ans. 3: (b)

Solution: $E_n = \frac{-13.6}{n^2}\frac{\mu}{m_e} = \frac{-13.6}{n^2}\times\frac{1.00545 m_e}{m_e} = -13.526$

$\because m_p = \frac{M_p}{10},\ \mu = \frac{m_e \cdot m_p}{m_e + m_p} = 1.00545\, m_e$

Ans. 4: (c)

Solution: $E_n = \frac{-13.6}{n^2}\ eV$

$\Rightarrow E_1 = -13.6\ eV,\ E_2 = -3.4\ eV,\ E_3 = 1.5\ eV,\ E_4 = 0.85\ eV,\ E_5 = 0.54\ eV$

$E_6 = 0.3777\ eV,\ E_7 = 0.2775\ eV$

Since Electron have kinetic energy $13.377\ eV = -13.6 + 0.2775\ eV \Rightarrow n = 7$

$\because r_n = a_0 n^2 \Rightarrow r_n = 49 a_0$

Ans. 5: (a)

Solution: $R_M = \frac{R_\infty}{1+\frac{m_c}{M}} \Rightarrow \alpha = \frac{1}{1+\frac{m_c}{M}} \Rightarrow 1+\frac{m_c}{M} = \frac{1}{\alpha} \Rightarrow \frac{m_c}{M} = \frac{1}{\alpha} - 1 = \frac{1-\alpha}{\alpha}$

---

2. Spin Orbit - Coupling

Q1. The energy difference between the $3p$ and $3s$ levels in Na is $2.1\,eV$. Spin-orbit coupling splits the $3p$ level, resulting in two emission lines differing by $6\,\mathring{A}$. The splitting of the 3p level is approximately,

(a) $2\ eV$ (b) $0.2\,eV$ (c) $0.02\,eV$ (d) $2\,meV$

JEST 2015

Q2. What is the difference between the maximum and the minimum eigenvalues of a system of two electrons whose Hamiltonian is $H = J\vec{S}_1.\vec{S}_2$, where $\vec{S}_1$ and $\vec{S}_2$ are the corresponding spin angular momentum operators of the two electrons?

(a) $\frac{J}{4}$ (b) $\frac{J}{2}$ (c) $\frac{3J}{4}$ (d) J

JEST 2018

---

2. Spin Orbit – Coupling (Solution)

Ans. 1: (d)

Solution: The fine structure splitting of Na in ground and excited state is

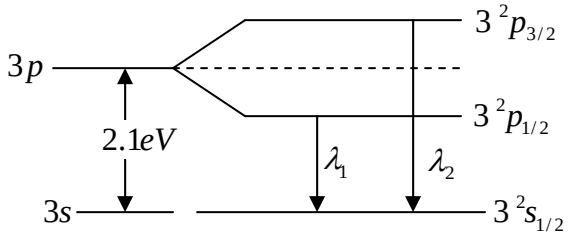

The transition $3\,^2p_{3/2} \to 3\,^2s_{1/2}$ produces photon of wavelength λ_2 and corresponding photon energy is $E_2 = \dfrac{12400}{\lambda_2\left(\overset{0}{\mathrm{A}}\right)} eV$

The transition $3\,^2p_{1/2} \to 3\,^2s_{1/2}$ produces photon of wavelength λ_1 and corresponding photon energy is $E_1 = \dfrac{12400}{\lambda_1\left(\Lambda^0\right)} eV$ .The separation between $^2p_{3/2}$ and $^2p_{1/2}$ is

$$\Delta E = E_2 - E_1 = \frac{12400}{\lambda_2} - \frac{12400}{\lambda_1} = 12400\left(\frac{1}{\lambda_2} - \frac{1}{\lambda_1}\right) = 12400\left(\frac{\lambda_1 - \lambda_2}{\lambda_1\lambda_2}\right)$$

Given $\Delta\lambda = \lambda_1 - \lambda_2 = 6A^0$ also fine structure splitting is of the order of $10^{-3} eV$.

Thus λ_1 and λ_2 are approximately same as λ corresponds to $3p \to 3s$, whereas wavelength (λ) corresponding to $3p \to 3s$ transition is $\lambda = \dfrac{12400}{2.1} A^0$

Thus, $\lambda_1\lambda_2 \cong \lambda^2 = \left(\dfrac{12400}{2.1}\right)^2$

$$\therefore \qquad \Delta E = 12400 \times \frac{6}{\left(\dfrac{12400}{2.1}\right)^2} = \frac{2.1 \times 2.1 \times 6}{12400} \cong 2 \times 10^{-3}\, eV \Rightarrow \Delta E = 2\, meV$$

Ans. 2: (d)

Solution: $H = J\vec{S}_1.\vec{S}_2 = J\left(\dfrac{s^2 - s_1^2 - s_2^2}{2}\right) \Rightarrow J\left(\dfrac{s(s+1) - s_1(s_1+1) - s_2(s_2+1)}{2}\right)$

$s_1 = \dfrac{1}{2}, s_2 = \dfrac{1}{2} \quad s = 1, 0$

For $s=1$ $E_f = J.\left(\dfrac{2\hbar^2 - \frac{3}{4}\hbar^2 - \frac{3}{4}\hbar^2}{2}\right) = \dfrac{J\hbar^2}{4}$

For $s=0$ $E_g = J.\left(\dfrac{0\hbar^2 - \frac{3}{4}\hbar^2 - \frac{3}{4}\hbar^2}{2}\right) = -J\dfrac{3\hbar^2}{4}$

$$E_f - E_g = \frac{J\hbar^2}{4} - \left(-\frac{3J\hbar^2}{4}\right) = \frac{4}{4}J\hbar^2 = J\hbar^2$$

---

3. LS-Coupling and JJ Coupling

Q1. Which of the following statements is true for the energies of the terms of the carbon atom in the ground state electronic configuration $1s^2 2s^2 2p^2$?

(a) ${}^3P <^1 D <^1 S$ (b) ${}^3P <^1 S <^1 D$

(c) ${}^3P <^1 F <^1 S$ (d) ${}^3P <^1 F <^1 D$

JEST 2015

Q2. Consider a hypothetical world in which the electron has spin $\frac{3}{2}$ instead of $\frac{1}{2}$. What will be the electronic configuration for an element with atomic number $Z = 5$?

(a) $1s^4, 2s^1$ (b) $1s^4, 2s^2, 2p^1$ (c) $1s^5$ (d) $1s^3, 2s^1, 2p^1$

JEST 2019

---

3. LS-Coupling and JJ Coupling (Solution)

Ans. 1: (a)

Solution: The spectroscopy terms for p^2 are $^1S_0, {}^1D_2, {}^3P_2$. According to Hund's rule, state with highest multiplicity lies lowest. Then, out of same multiplicity, state with highest L lies lowest. Thus these terms can be arranged as $^3P < {}^1D < {}^1S$

Ans. 2: (a)

Solution: The degeneracy of level j is $d = 2j+1$

For s - orbit, $d = 2s+1 = 2\times\frac{3}{2}+1 = 4$

$\therefore$ The electronic configuration for $z = 5$ is

$1s^4, 2s^1$. Thus correct option is (a)

---

4. Selection Rules and Atomic Life-Time

Q1. Which of the following excited states of a hydrogen atom has the highest lifetime?

(a) $2p$ (b) $2s$ (c) $3s$ (d) $3p$

JEST 2015

(Solution)

4. Selection Rules and Atomic Life-Time

Ans. 1: (b)

Solution: $2p$ and $3p$ are normal states. Electron from $2p$ and $3p$ make transition to ground state within 10^{-9} sec. Electron in $3s$ state although can not come directly to ground state but it can come to $1s$ through $2p$ as $3s \to 2p \to 1s$, while $2s$ is metastable state and electron in $2s$ state can make transition to $1s$ slowly. Thus $2s$ has long life time.

---

5. LINE BROADENING

Q1. A sodium atom in the first excited $3P$ states has a lifetime of $16ns$ for decaying to the ground $3S$ state. The wavelength of the emitted photon is 589 nm. The corresponding line width of the transition (in frequency units) is about

(a) 1.7×10^6 Hz (b) 1×10^7 Hz

(c) 6.3×10^7 Hz (d) 5×10^{14} Hz

JEST 2013

---

5. LINE BROADENING (Solution)

Ans. 1: (c)

Solution: $\Delta E \cdot \Delta t = \hbar$

$$\Delta f = \frac{1}{\Delta t} = \frac{1}{16\times10^{-9}} Hz = 6.25\times10^{7} Hz = 6.3\times10^{7} Hz$$

---

6. X-Rays

Q1. If hydrogen atom is bombarded by energetic electrons, it will emit

(a) K_α X - rays (b) β -rays

(c) Neutrons (d) none of the above

JEST 2014

---

6. X-Rays (Solution)

Ans. 1: (d)

---

7. ROTATIONAL SPECTRA

Q1. The H_2 molecule has a reduced mass $M = 8.35\times10^{-28}\ kg$ and an equilibrium internuclear distance $R = 0.742\times10^{-10}\ m$. The rotational energy in terms of the rotational quantum number J is

(a) $E_{rot}(J) = 7J(J-1)\ meV$

(b) $E_{rot}(J) = \frac{5}{2}J(J+1)\ meV$

(c) $E_{rot}(J) = 7J(J+1)\ meV$

(d) $E_{rot}(J) = \frac{5}{2}J(J-1)\ meV$

JEST 2016

---

7. ROTATIONAL SPECTRA (Solution)

Ans. 1: (c)

Solution: $E = \frac{\hbar^2}{2I} J\left(J+1\right)$,

where, $I = \mu r^2 = 8.35\times10^{-28} kg \times \left(0.742\times10^{-10} m\right)^2 = 4.597\times10^{-48} kgm^2$

$$\therefore \frac{\hbar^2}{2I} = \frac{\left(1.05\times10^{-34} J\cdot s\right)^2}{2\times\left(4.597\times10^{-48} kgm^2\right)} = \frac{1.112\times10^{-68}}{9.18\times10^{-48}}$$

$$= 1.21\times10^{-21} J = 1.21\times10^{-21} \times \frac{1}{1.6\times10^{-19}} eV = 7.57\times10^{-3} eV = 7.57\, meV$$

$$\therefore E \cong 7J\left(J+1\right) meV$$

---

8. VIBRATIONAL SPECTRA

Q1. The value of elastic constant for copper is about $100\,Nm^{-1}$ and the atomic spacing is $0.256\,\text{nm}$. What is the amplitude of the vibration of the Cu atoms at 300 K as a percentage of the equilibrium separation?

(a) 4.55 % (b) 3.55 % (c) 2.55 % (d) 1.55 %

JEST 2014

Q2. Which functional form of potential best describes the interaction between a neutral atom and an ion at large distances (i.e. much larger than their diameters)

(a) $V \propto -1/r^2$ (b) $V \propto -1/r$ (c) $V \propto -e^{-r/a}/r$ (d) $V \propto -1/r^3$

JEST 2014

---

8. VIBRATIONAL SPECTRA (Solution)

Ans. 1: (b)

Solution: We know that, $E = \frac{1}{2}\beta A^2$ and $a = 0.256 \times 10^{-9}\, m$

For one dimension, $K.E = \frac{1}{2}k_B T$ and $P.E = \frac{1}{2}k_B T$

$$\langle E \rangle = k_B T = \frac{1}{2}\beta A^2 \Rightarrow A = \sqrt{\frac{2k_B T}{\beta}} = \sqrt{\frac{2 \times 1.38 \times 10^{-23} \times 300}{100}} = \sqrt{8.28 \times 10^{-23}}$$

$$= 9.09 \times 10^{-12} = 0.0090\ nm$$

Now, x of $0.256nm = 0.009nm$

$$x = \frac{0.00909nm}{0.256nm} = 0.03551 = 3.5\%$$

Ans. 2: (a)

Practice Set – Nuclear and Particle Physics

JEST Previous Year Question

(2012 To 2020)

1.	Basic Properties of Nuclei	02
2.	Liquid Drop Model	0
3.	Nuclear Shell Model	0
4.	Nuclear Forces and Deutron Problem	0
5.	Radioactivity Basics	03
6.	Alpha, Beta and Gamma Decay	01
7.	Nuclear Fission and Fusion	0
8.	Particle Physics	0
9.	CPT Invariance	0
10.	Nuclear Others	0
Total Number of Questions		06

1. Basics Properties of Nuclei

Q1. The stable nucleus that has $\frac{1}{3}$ the radius of ^{189}Os nucleus is,

(a) ^{7}Li (b) ^{16}O (c) ^{4}He (d) ^{14}N

JEST-2015

Q2. The binding energy of the k-shell electron in a Uranium atom $(Z = 92,\ A = 238)$ will be modified due to (i) screening caused by other electrons and (ii) the finite extent of the nucleus as follows:

(a) Increases due to (i), remains unchanged due to (ii)

(b) Decreases due to (i), decreases due to (ii)

(c) Increases due to (i), increases due to (ii)

(d) Decreases due to (i), remains unchanged due to (ii)

JEST-2013

---

1. Basics Properties of Nuclei (Solution)

Ans. 1: (a)

Solution: $R = \frac{1}{3} R_{Os} \Rightarrow R_0 \left(A\right)^{1/3} = \frac{1}{3} R_0 \left(189\right)^{1/3} \Rightarrow A = 7$

Ans. 2: (b)

---

5. Radioactivity Basics

Q1. The half-life of a radioactive nuclear source is 9 days. The fraction of nuclei which are left under caved after 3 days is:

(a) $\frac{7}{8}$ (b) $\frac{1}{3}$ (c) $\frac{5}{6}$ (d) $\frac{1}{2^{1/3}}$

JEST-2016

Q2. ^{238}U decays with a half life of 4.51×10^{9} years, the decay series eventually ending at ^{206}Pb, which is stable. A rock sample analysis shows that the ratio of the numbers of atoms of ^{206}Pb to ^{238}U is 0.0058. Assuming that all the ^{206}Pb has been produced by the decay of ^{238}U and that all other half-lives in the chain are negligible, the age of the rock sample is

(a) 38×10^{6} years (b) 48×10^{6} years (c) 38×10^{7} years (d) 48×10^{7} years

JEST-2013

Q3. In the mixture of isotopes normally found on the earth at the present time, $^{238}_{92}U$ has an abundance of 99.3% and $^{235}_{92}U$ has an abundance of 0.7%. The measured lifetimes of these isotopes are 6.52×10^{9} years and 1.02×10^{9} years, respectively. Assuming that they were equally abundant when the earth was formed, the estimated age of the earth, in years is

(a) 6.0×10^{9} (b) 1.0×10^{9} (c) 6.0×10^{8} (d) 1.0×10^{8}

JEST-2014

---

5. Radioactivity Basics (Solution)

Ans. 1: (d)

Solution: $N = N_0\left(\frac{1}{2}\right)^n = N_0\left(\frac{1}{2}\right)^{3/9} \Rightarrow \frac{N}{N_0} = \frac{1}{2^{1/3}}$

Ans. 2: (a)

Solution: $t = \frac{1}{\lambda_u}\ln\left(\frac{N_{pb}+N_u}{N_u}\right)$

Since, $\frac{1}{\lambda_\mu} = \frac{t_{1/2}}{0.693} = \frac{4.51\times10^9}{0.693} = 6.507\times10^9$

Hence, $t = 6.507\times10^9 \ln\left(0.0058+1\right) = 0.005783\times6.507\times10^9 = 37\times10^6$ year

Ans. 3: (a)

Solution: If the number of ${}^{92}U^{238}$ nuclei originally formed is N, the number present now is

$$N_{238} = Ne^{-t/T} = Ne^{-t/6.52}$$

where t is elapsed time in units of 10^9 year and T is life time of U. Since the number of ${}^{92}U^{235}$ nuclei originally formed is. The number now present is

$$N_{235} = Ne^{-t/1.02}$$

The present abundance of ${}^{92}U^{235}$ is

$$7\times10^{-3} = \frac{N_{235}}{N_{238}+N_{235}} \approx \frac{N_{235}}{N_{238}} = \frac{Ne^{-t/1.02}}{Ne^{-t/6.52}} = e^{0.827t} \approx \frac{1}{7\times10^{-3}} = 143 = t = \frac{4.96}{0.827} = 6.0$$

That is, the elapsed time is $t = 6.0\times10^9$ yr.

---

6. Alpha, Beta and Gamma Decay

Q1. The reaction $e^{+} + e^{-} \rightarrow \gamma$ is forbidden because,

(a) Lepton number is not conserved (b) Linear momentum is not conserved

(c) Angular momentum is not conserved (d) Charge is not conserved

JEST-2015

---

6. Alpha, Beta and Gamma Decay (Solution)

Ans. 1: (b)

Solution: In order to conserve linear momentum two photons are required that move in opposite direction.

Practice Set – Optics

JEST Previous Year Question

(2012 To 2020)

1.	Ray Optics	02
2.	Interference	06
3.	Diffraction	01
4.	Polarisation	05
5.	Doppler Effect	01
6.	Simple Harmonic Motion	02
Total Number of Questions		17

1. RAY OPTICS

Q1. The equation describing the shape of curved mirror with the property that the light from a point source at the origin will be reflected in a beam of rays parallel to the x-axis is (with a as some constant)

(a) $y^2 = ax + a^2$ (b) $2y = x^2 + a^2$ (c) $y^2 = 2ax + a^2$ (d) $y^2 = ax^3 + 2a^2$

JEST 2013

Q2. A spherical air bubble is embedded in a glass slab. It will behave like a

(a) Cylindrical lens (b) Achromatic lens (c) Converging lens (d) Diverging lens

JEST 2014

---

1. RAY OPTICS (Solution)

Ans. 1: (c)

Ans. 2: (c)

---

2. INTERFERENCE

Q1. Three sinusoidal waves have the same frequency with amplitude A, $A/2$ and $A/3$ while their phase angles are 0, $\pi/2$ and π respectively. The amplitude of the resultant wave is

(a) $\frac{11A}{6}$ (b) $\frac{2A}{3}$ (c) $\frac{5A}{6}$ (d) $\frac{7A}{6}$

JEST 2014

Q2. The refractive index (n) of the entire environment around a double slit interference setup is changed from $n=1$ to $n=2$. Which one of the following statements is correct about the change in the interference pattern?

(a) The fringe pattern disappears

(b) The central bright maximum turns dark, i.e. becomes a minimum

(c) Fringe width of the pattern increases by a factor 2

(d) Fringe width of the pattern decreases by a factor 2

JEST 2019

Q3. A thin air film of thickness d is formed in a glass medium. For normal incidence, the condition for constructive interference in the reflected beam is (in terms of wavelength λ and integer $m=0,1,2,...$)

(a) $2d=(m-1/2)\lambda$ (b) $2d=m\lambda$ (c) $2d=(m-1)\lambda$ (d) $2\lambda=(m-1/2)d$

JEST 2017

Q4. In the Young's double slit experiment (screen distance $D=50\,cm$ and $d=0.1\,cm$), a thin mica sheet of refractive index $n=1.5$ is introduced in the path of one of the beams. If the central fringe gets shifted by 0.2, what is the thickness (in micrometer) of the mica sheet?

JEST 2019

Q5. A collimated white light source illuminates the slits of a double slit interference setup and forms the interference pattern on a screen. If one slit is covered with a blue filter, which one of the following statements is correct?

(a) No interference pattern is observed after the slit is covered with the blue filter

(b) Interference pattern remains unchanged with and without the blue filter

(c) A blue interference pattern is observed

(d) The central maximum is blue with coloured higher order maxima

JEST 2019

Q6. White light of intensity I_0 is incident normally on a filter plate of thickness d. The plate has a wavelength (λ) dependent absorption coefficient $\alpha(\lambda) = \alpha_0\left(1 - \frac{\lambda}{\lambda_0}\right)$ per unit length. The band pass edge of the filter is defined as the wavelength at which the intensity, after passing through the filter, is $I = \frac{I_0}{\rho}, \alpha_0, \lambda_0$ and ρ are constants. The reflection coefficient of the plate may be assumed to be independent of λ. Which one of the following statements is true about the bandwidth of the filter?

(a) The bandwidth is linear dependent on λ_0

(b) The bandwidth is independent of the plate thickness d

(c) The bandwidth is linearly dependent on α_0

(d) The bandwidth is dependent on the ratio α_0 / d

JEST 2019

---

2. INTERFERENCE (Solution)

Ans. 1: (c)

Solution: $y_1 = A\sin(\omega t + 0)$, $\quad y_2 = \frac{A}{2}\sin\left(\omega t + \frac{\pi}{2}\right)$, $\quad y_3 = \frac{A}{3}\sin(\omega t + \pi)$

Hence, $y = y_1 + y_2 + y_3 = A\sin\omega t + \frac{A}{2}\cos\omega t - \frac{A}{3}\sin\omega t = \frac{2A}{3}\sin\omega t + \frac{A}{2}\cos\omega t$

$$A' = \sqrt{\left(\frac{2A}{3}\right)^2 + \left(\frac{A}{2}\right)^2} = \sqrt{\frac{4A^2}{9} + \frac{A^2}{4}} = \sqrt{\frac{25A^2}{36}} = \frac{5A}{6}$$

Ans. 2: (d)

Solution: $\beta = \frac{D}{2d}\left(\frac{\lambda}{n}\right)$

Ans. 3: (a)

Solution: Condition for constructive interference is,

$2\mu d\cos\theta = \left(m - \frac{1}{2}\right)\lambda$, where $m = 1, 2, 3.....$

for thin airfilm $(\mu = 1)$ and normal incidence $(\theta = 0^0)$

$$2d = \left(m - \frac{1}{2}\right)\lambda$$

Ans. 4: 8

Solution: $x_0 = \frac{D}{d}(\mu - 1)t$

$$0.2 = \frac{50}{0.1}(1.5 - 1)t$$

$$t = \frac{0.2 \times 0.1}{50 \times 0.5} cm = 8 \times 10^{-4}\, cm = 8\mu m.$$

Ans. 5: (c)

Solution: Because to form stationary interference pattern light from two coherent source should be of same frequency and wavelength

Ans. 6: (a)

Solution: For example C-band and L-band in fiber optics communication, the central wavelength λ_c of band pass is $\lambda_c = \lambda_0\sqrt{1-\frac{\sin^2\theta}{n^{+^2}}}$

Where $\lambda_0 =$ central wavelength at normal incidence

$n^* =$ filter effective index of refraction

$\theta =$ angle of incidence

Here this result is applicable only for very low absorption.

---

3. DIFFRACTION

Q1. Let λ be the wavelength of incident light. The diffraction pattern of a circular aperture of dimension r_0 will transform from Fresnel to Fraunhofer region if the screen distance z is,

(a) $z >> \frac{r_0^2}{\lambda}$ (b) $z >> \frac{\lambda^2}{r_0}$ (c) $z << \frac{\lambda^2}{r_0}$ (d) $z << \frac{r_0^2}{\lambda}$

JEST 2015

---

3. DIFFRACTION (Solution)

Ans. 1: (a)

Solution: Fraunhofer made an approximation on the quadratic phase function:

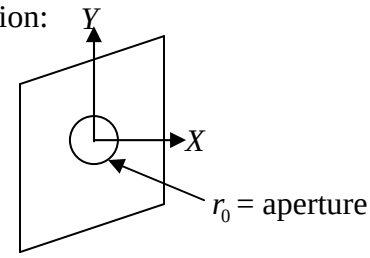

$$e^{i\frac{k\left(x_0^2+y_0^2\right)}{2z}} = e^{i\frac{kr_0^2}{2z}} \approx 1$$

If $z >> \frac{kr_0^2}{2} \Rightarrow z >> \frac{\pi r_0^2}{\lambda} \Rightarrow z >> \frac{r_0^2}{\lambda}$

For this reason Fraunhofer diffraction is also called Far-field diffraction, whereas for Fresnel diffraction, the condition is

$z >> \lambda$ called near-field diffraction.

---

4. POLARISATION

Q1. The resolving power of a grating spectrograph can be improved by

(a) Recording the spectrum in the lowest order

(b) Using a grating with longer grating period

(c) Masking a part of the grating surface

(d) Illuminating the grating to the maximum possible extent

JEST 2014

Q2. Three polarizers are stacked, normal to a central axis, along which is incident a beam of unpolarized light of intensity I_0. The first and the third polarizers are perpendicular to each other and the middle polarizer is rotated at an angular frequency ω about the central axis (light beam). The time dependent intensity of light emerging after the third polarizer will be given by

(a) $I(t)=\left(\frac{I_0}{16}\right)\{1-\cos(4\omega t)\}$

(b) $I(t)=\left(\frac{I_0}{8}\right)\{1-\cos(2\omega t)\}$

(c) $I(t)=\left(\frac{I_0}{4}\right)\{1-2\cos\omega t\}$

(d) $I(t)=\left(\frac{I_0}{2}\right)\cos^2\omega t$

JEST-2020

Q3. A thin film of water having refractive index $n=1.333$ floats on the surface of a beaker of silicone oil having refractive index $n_s=1.40$. The arrangement is illuminated by $600\,nm$ light incident normally from top and a large region of the film appears bright red. What is the minimum possible thickness of the film (in nm)?

JEST-2020

Q4. A laser has output power of $150\,mW$ with beam diameter of $2\,mm$ at a wavelength $630\,nm$. What is the value of the electric field in units of V/m is? Use Coulomb's constant, $\frac{1}{(4\pi\in_0)}=9\times10^9\,Nm^2C^{-2}$

JEST-2020

Q5. A continuous $He-Ne$ laser beam $(\lambda = 632.8\,nm)$ is 'chopped', using a spinning aperture into $1\,\mu s$ square pulses. The order-of-magnitude estimate of the spectral width $\Delta\lambda$ of the emerging 'pulsed' light is

(a) $10^{-9}\,m$ (b) $10^{-12}\,m$ (c) $10^{-15}\,m$ (d) $10^{-18}\,m$

JEST-2020

---

4. POLARISATION (Solution)

Ans. 1: (d)

Solution: $\Rightarrow R \cdot P = \frac{\Delta\lambda}{\lambda} = nN$, where N - Number of slit and n - order of diffraction.

Ans. 2: (a)

Solution:

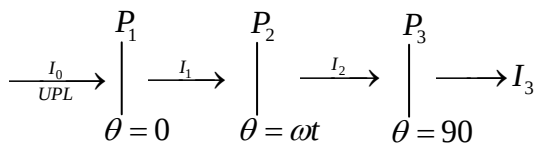

$$I_1 = I_0 / 2$$

$$I_2 = I_1 \cos^2\theta = \frac{I_0}{2}\cos^2\theta$$

$$I_3 = I_2 \cos^2\left(90^0 - \theta\right) = \frac{I_0}{2}\cos^2\theta \sin^2\theta = \frac{I_0}{\delta}\sin^2 2\theta$$

$$I_3 = \frac{I_0}{16}\left(1 - \cos 4\theta\right) = \frac{I_0}{16}\left(1 - \cos 4\omega t\right)$$

Ans. 3: 0.225

Solution: $2\mu_f t \cos r = n\lambda$

$r = 0^0$

$n = 1$ for minimum thickness

$$t_{\min} = \frac{\lambda}{2\mu_f} = \frac{600nm}{2 \times 1.333} = 225nm$$

Ans. 4: 6000

Solution: $I = \frac{1}{2} \in_0 cE^2$

Intensity P_z is equal to the amount of power per unit area transmitted by the light.

$$I = \frac{P}{\pi r_0^2}$$

$$P = \pi r_0^2 I$$

$$P = \pi r_0^2 \frac{1}{2}\varepsilon_0 c E^2$$

$$E = \sqrt{\frac{8P}{4\pi\varepsilon_0 c r_0^2}}$$

$$= \sqrt{\frac{8\times150\times10^{-3}\times9\times10^{9}}{3\times10^{8}\times1\times10^{-6}}} = \sqrt{\frac{8\times15\times9}{3}\times10^{5}}$$

$$= 2\times3\times10^{3}$$

$$E = 6000V/m$$

Ans. 5: (c)

Solution: $\Delta\nu \sim \frac{1}{\tau}$

$$\frac{c}{\lambda^2}\Delta\lambda \sim \frac{1}{\tau}$$

$$\Delta\lambda \sim \frac{\lambda^2}{c\tau} = \frac{\left(632.8\times10^{-9}\right)^2}{\left(3\times10^{8}\right)\left(1\times10^{-6}\right)} = 1.33\times10^{-15}m$$

---

5. DOPPLER EFFECT

Q1. An optical line of wavelength $5000\,\mathring{A}$ in the spectrum of light from a star is found to be red-shifted by an amount of $2\,\mathring{A}$. Let v be the velocity at which the star is receding. Ignoring relativistic effects, what is the value of $\frac{c}{v}$?

JEST 2019

---

5. DOPPLER EFFECT (Solution)

Ans. 1: 2500

Solution: $\frac{c}{\nu} = \frac{\lambda_0}{\Delta\lambda} = \frac{5000}{2} = 2500$.

---

6. Simple Harmonic Motion

Q1. A particle of mass m moves in a one-dimensional potential $V(x) = F_0|x|$, where F_0 is a positive constant. Given the initial conditions, $x(0) = x_0 > 0$ and $\dot{x}(0) = 0$, which one of the following statements is correct?

(a) The particle undergoes simple harmonic motion about the origin with frequency $\omega = 2\pi\sqrt{\frac{F_0}{mx_0}}$

(b) The angular frequency of oscillations of the particle is $\omega = \frac{1}{2}\pi\sqrt{\frac{F_0}{2mx_0}}$

(c) The particle begins from rest and is accelerated along the positive x-axis such that $x(t) = \frac{x_0 + F_0 t^2}{2m}$

(d) The angular frequency of oscillations of the particle is independent of its mass

JEST-2020

Q2. Two tuning forks A and B are struck instantaneously to obtain Lissajous figures. The figures go through a complete cycle in $20\,s$. Fork A is located with wax, so that the cycle period changes to $10\,s$. If the frequency of fork B is $256.10\,Hz$, what is the frequency of fork A after loading?

(a) $256.00\,Hz$ (b) $256.05\,Hz$ (c) $256.15\,Hz$ (d) $256.20\,Hz$

JEST-2020

---

6. Simple Harmonic Motion (Solution)

Ans. 1: (b)

Solution: $\vec{F} = -\dfrac{\partial v}{\partial x}$

$$V(x) = F_0 x \qquad x > 0$$

$$= -F_0 x \qquad x < 0$$

$$\vec{F} = \begin{bmatrix} -F_0 & x > 0 \\ +F_0 & x < 0 \end{bmatrix}$$

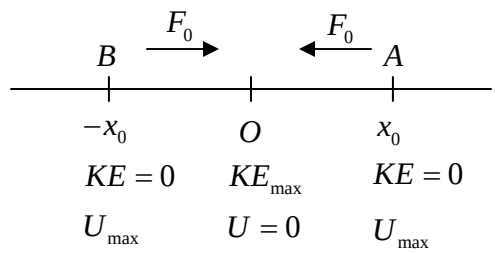

Practice will oscillate about origin but its motion is not SHM because $F \neq -kx$.

Time taken by practice from A to 0 is $t_1 = \sqrt{\dfrac{2x_0}{a}} = \sqrt{\dfrac{2x_0 m}{F_0}}$

Time period $T = 4t_1 = 4\sqrt{2x_0 m / f_0}$

Frequency $n = \dfrac{1}{T} = \dfrac{1}{4}\sqrt{\dfrac{F_0}{2x_0 m}} \rightarrow \omega = 2\pi n = \dfrac{1}{2}\pi\sqrt{\dfrac{F_0}{2x_0 m}}$

Ans. 2: (a)

Solution: $n_1 \sim n_2 = \dfrac{1}{t_1}$

$$n_1 \sim 256.10 = \frac{1}{20} = 0.05$$

So, $n_1 = 256.05$ or 256.15

Since cycle period is decreasing on loading ωax

So, $n_1 < n_2$

$$n_1 = 256.05$$

Suppose on loading ωax n_1 id decreased to $n_1^{\omega ax}$

then $n_2 - n_1^{\omega ax} = \dfrac{1}{t_2} = \dfrac{1}{10s} = 0.1Hz$

$$n_1^{\omega ax} = n_2 - 0.10 = 256.10 - 0.10$$

$$n_1^{\omega ax} = 256Hz$$

Part-A: 1-Mark Questions

Q2. The six faces of a cube are painted violet, blue, red, green, yellow and orange. If the cube is rolled 4 times, what is the probability that the green face appears exactly 3 times?

(a) $\frac{3}{24}$ (b) $\frac{5}{124}$ (c) $\frac{5}{324}$ (d) $\frac{15}{222}$

Ans: (c)

Solution.:

Probability of occurrence of green face $=\frac{1}{6}=p$

Probability of not occurrence of green face $=\frac{5}{6}=1-p=q$

Cube is rolled 4 times, then the probability that the green face appears exactly 3 times is

$$={}^{n}C_r p^r q^{n-r}={}^{4}C_3 p^3 q^{4-3}=\frac{4!}{3!1!}\left(\frac{1}{6}\right)^3\left(\frac{5}{6}\right)=4\left(\frac{1}{6}\right)^3\left(\frac{5}{6}\right)=\frac{5}{324}$$

Q7. Let ABCDEF be a regular hexagon. The vector $\overrightarrow{AB}+\overrightarrow{AC}+\overrightarrow{AD}+\overrightarrow{AE}+\overrightarrow{AF}$ will be

(a) 0 (b) $\overrightarrow{AD}$ (c) $2\overrightarrow{AD}$ (d) $3\overrightarrow{AD}$

Ans: (d)

Solution.:

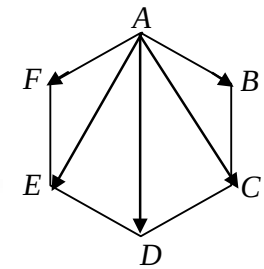

$$\overrightarrow{AB}+\overrightarrow{AC}+\overrightarrow{AD}+\overrightarrow{AE}+\overrightarrow{AF}=\left(\overrightarrow{AC}+\overrightarrow{AF}\right)+\left(\overrightarrow{AB}++\overrightarrow{AE}\right)+\overrightarrow{AD}$$

$$=\left(\overrightarrow{AC}+\overrightarrow{CD}\right)+\left(\overrightarrow{ED}++\overrightarrow{AE}\right)+\overrightarrow{AD}=\overrightarrow{AD}+\overrightarrow{AD}+\overrightarrow{AD}=3\overrightarrow{AD}$$

$\because \overrightarrow{AF}=\overrightarrow{CD}$ and $\overrightarrow{ED}=\overrightarrow{AB}$

Q10. What value the following infinite series will converge to?

$$\sum_{n=1}^{\infty}\frac{n^2}{2^n}$$

(a) $\frac{\pi^2}{6}$ (b) $\frac{1}{2}$ (c) 3 (d) 6

Ans: (d)

Solution:

$S=\frac{1}{2}+\frac{4}{4}+\frac{9}{8}+\frac{16}{16}+\frac{25}{32}+\ldots$ and $2S=1+\frac{4}{2}+\frac{9}{4}+\frac{16}{8}+\frac{25}{16}+\ldots$

Subtracting these two will give; $S=1+\frac{3}{2}+\frac{5}{4}+\frac{7}{8}+\frac{9}{16}+\frac{1}{32}+\frac{1}{}\ldots;$

$$2S-2=3+=3+\frac{5}{2}+\frac{7}{4}+\frac{9}{8}+\frac{11}{16}+...$$

Thus

$$2S-2-S=3+=2+\frac{2}{2}+\frac{2}{4}+\frac{2}{8}+\frac{2}{16}+...$$

$$=3+\frac{2}{4}\left(1+\frac{1}{2}+\frac{1}{2^2}+\frac{1}{2^3}+...\right)=3+\frac{2}{4}\left(\frac{1}{1-1/2}\right)=4$$

$$\Rightarrow S-2=4 \quad \Rightarrow S=6$$

Q22. Consider the matrix $A=\begin{pmatrix}1 & 0 & 0 & 1\\ 0 & -2 & 0 & 0\\ 0 & 0 & -3 & 0\\ 1 & 0 & 0 & 4\end{pmatrix}$

What is the determinant of the matrix $\exp(A)$?

(a) 1 (b) $\exp(24)$ (c) 24 (d) 0

Ans: (a)

Solution.:

$$\det e^A = e^{Trace\,A} = e^0 = 1 \quad \because Trace\,A = 1-2-3+4=0$$

Q15. Consider the infinite series

$$\exp\left[\left(x+\frac{x^3}{3}+.....\right)^2-\left(\frac{x^2}{2}+\frac{x^4}{4}+.....\right)^2\right]$$

Which one of the following represents this series?

(a) $(1+x)^{\ln(1-x)}$ (b) $\exp\left[\sin^2 x-(\cos x-1)^2\right]$

(c) $\exp\left(xe^x\right)$ (d) $(1-x)^{-\ln(1+x)}$

Ans: (d)

Solution.:

Let

$$z=\exp\left[\left(x+\frac{x^3}{3}+.....\right)^2-\left(\frac{x^2}{2}+\frac{x^4}{4}+.....\right)^2\right]$$

$$\Rightarrow \ln z=\left[\left(x+\frac{x^3}{3}+.....\right)^2-\left(\frac{x^2}{2}+\frac{x^4}{4}+.....\right)^2\right]$$

H.No. 40-D, G.F., Jia Sarai, Near IIT, Hauz Khas, New Delhi-16
Phone: 011-26865455/+91-9871145498, Website: www.physicsbyfiziks.com, Email: fiziks.physics@gmail.com

$$\Rightarrow \ln z = \left[\left\{\left(x+\frac{x^3}{3}+.....\right)+\left(\frac{x^2}{2}+\frac{x^4}{4}+.....\right)\right\}\left(x+\frac{x^3}{3}+.....\right)-\left(\frac{x^2}{2}+\frac{x^4}{4}+.....\right)\right]$$

$$\because a^2-b^2=(a+b)(a-b)$$

$$\Rightarrow \ln z = \left(x+\frac{x^2}{2}+\frac{x^3}{3}+\frac{x^4}{4}.....\right)\left(x-\frac{x^2}{2}+\frac{x^3}{3}-\frac{x^4}{4}.....\right)=-\ln(1-x)\ln(1+x)$$

$$\Rightarrow \ln z = \ln(1-x)^{-\ln(1+x)} \Rightarrow z=(1-x)^{-\ln(1+x)}$$

Part-C: 2-Mark Numerical Questions

Q1. Consider a real tensor T_{ijk} with $i, j, k = 1,....,5$. It has the following properties:

$$T_{ijk} = T_{jik} = T_{ikj}, \qquad \sum_i T_{iik} = 0$$

What is the number of independent real components of this tensor?

Ans: 0030

Solution:

Number of independent real components of this tensor $= n(n+1) = 5\times 6 = 30$

Q7. Evaluate the integral to the nearest integer

$$I = 100\int_0^\infty \frac{dt}{t}\left[\exp(-t)-\exp(-10t)\right]$$

Ans: 0230

Solution.:

$$L\left[\frac{1}{t}\{\exp(-t)-\exp(-10t)\}\right] = \int_s^\infty\left(\frac{1}{\bar{s}+1}-\frac{1}{\bar{s}+10}\right)d\bar{s}$$

$$\because L\left[\frac{f(t)}{t}\right] = \int_s^\infty f(\bar{s})d\bar{s}$$

$$\Rightarrow L\left[\frac{1}{t}\{\exp(-t)-\exp(-10t)\}\right] = \ln\frac{\bar{s}+1}{\bar{s}+10}\bigg|_s^\infty = \ln\frac{1+1/\bar{s}}{1+10/\bar{s}}\bigg|_s^\infty = 0-\ln\frac{s+1}{s+10} = \ln\frac{s+10}{s+1}$$

$$\because L\left[\frac{1}{t}\{\exp(-t)-\exp(-10t)\}\right] = \int_0^\infty \frac{1}{t}\left(e^{-t}-e^{-10t}\right)e^{-st}dt = \ln\frac{s+10}{s+1}$$

Now put $s=0$; $\int_0^\infty \frac{1}{t}\left(e^{-t}-e^{-10t}\right)e^{-0}dt = \ln 10 \Rightarrow I = 100\int_0^\infty \frac{1}{t}\left(e^{-t}-e^{-10t}\right)dt = 100\ln 10 = 230.3$

Part-A: 1-Mark Questions

Q2. The probability that you get a sum m from a throw of two identical fair dice is P_m. If the dice have 6 (six) faces labeled by $1, 2, \ldots 6$, which of the following statements is correct ?

(a) $P_9 = P_5$ (b) $P_9 = P_4$ (c) $P_9 = P_3$ (d) $P_9 = P_6$

Ans. 2: (a)

Solution.:

	First Dice	Second Dice	Sum	
P_9				
Total events = 36	3	6	9	$P_9 = \frac{4}{36} = \frac{1}{9}$
	4	5	9	
	5	4	9	
	6	3	9	
P_5	1	4	5	$P_5 = \frac{4}{36} = \frac{1}{9}$
	2	3	5	
	3	2	5	
	4	1	5	
P_4	1	3	4	$P_4 = \frac{3}{36} = \frac{1}{12}$
	2	2	4	
	3	1	4	
P_6	1	5	6	$P_6 = \frac{5}{36}$
	2	4	6	
	3	3	6	
	4	2	6	
	5	1	6	

Clearly $P_5 = P_9$

Thus 'a' is correct.

Q12. If θ and ϕ are respectively the polar and azimuthal angles on the unit sphere, what is $\langle \cos^2(\theta) \rangle$ and $\langle \sin^2(\theta) \rangle$, where $\langle O \rangle$ denotes the average of O?

(a) $\langle \cos^2(\theta) \rangle = 2/3$ and $\langle \sin^2(\theta) \rangle = 1/3$

(b) $\langle \cos^2(\theta) \rangle = 1/2$ and $\langle \sin^2(\theta) \rangle = 1/2$

(c) $\langle \cos^2(\theta) \rangle = 3/4$ and $\langle \sin^2(\theta) \rangle = 1/4$

(d) $\langle \cos^2(\theta) \rangle = 1/3$ and $\langle \sin^2(\theta) \rangle = 2/3$

Ans. 12: (d)

Solution.:

At the surface of unit sphere

$da = \sin\theta d\theta d\phi$ (as $R = 1$)

$$\langle \cos^2\theta \rangle = \frac{\iint \cos^2\theta \sin\theta d\theta d\phi}{\iint \sin\theta d\theta d\phi} = \frac{\int_0^{\pi} \cos^2\theta \sin\theta d\theta \int_0^{2\pi} d\phi}{4\pi} = -\left|\frac{\cos^3\theta}{3}\right|_0^{\pi} \cdot \frac{2\cancel{\pi}}{4\cancel{\pi}} \frac{1}{2} = -\frac{2}{3} \times \frac{1}{2} = \frac{1}{3}$$

$$\langle \sin^2\theta \rangle = \frac{\int_0^{\pi} \sin^2\theta \sin\theta d\theta \int_0^{2\pi} d\phi}{\iint \sin\theta d\theta d\phi} = \frac{2\pi}{4\pi} \int_0^{\pi} (1 - \cos^2\theta) \sin\theta d\theta = \frac{1}{2}\left[|\cos\theta|_0^{\pi} - \int_0^{\pi} \cos^2\theta \sin\theta d\theta \right]$$

$$= \frac{1}{2}\left[2 + \left|\frac{\cos^3\theta}{3}\right|_0^{\pi} \right] = \frac{1}{2}\left[2 - \frac{2}{3} \right] = \frac{1}{2} \cdot \frac{4}{3} = \frac{2}{3}$$

Thus, (a) is correct.

Q13. The function $f(x)$ shown below has non-zero values only in the range $0 < x < a$.

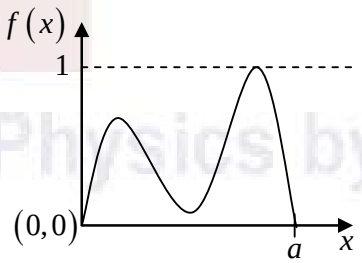

Which of the following figure represents $f(3x)$?

(a)

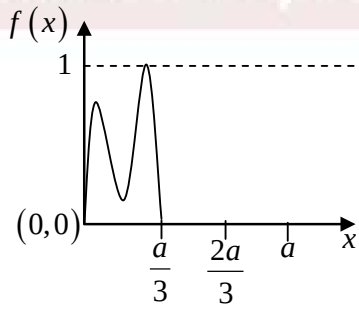

(b)

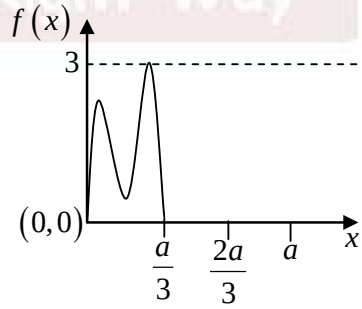

(c)

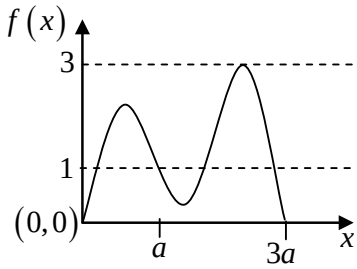

(d)

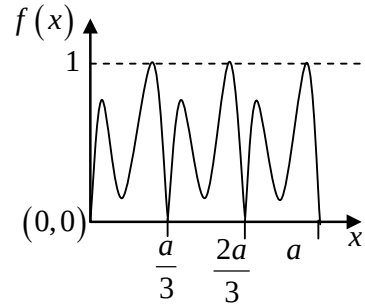

Ans. 13: (a)

Solution.:

If $f(x)$ has period "a" then $f(3x)$ will have period $\frac{a}{3}$.

Maximum value of the function $f(x)$ and $f(3x)$ will be same.

As $f(x)$ is zero beyond $x=a$, so 'd' is ruled out.

As for $f[3x]$, $3\cdot\frac{a}{3}$ a [which happens for x beyond $\frac{a}{3}$]

Thus 'a' is correct option.

Q14. Consider a complex function

$$f(z)=\frac{1}{6z^3+3z^2+2z+1}$$

What is the sum of the residues at its poles?

(a) $\frac{i\sqrt{3}}{7}$ (b) $\frac{4}{7}$ (c) $\frac{2}{7}$ (d) 0

Ans. 14: (d)

Solution. :

$$f(z)=\frac{1}{6z^3+3z^2+2z+1}=\frac{1}{3z^2(2z+1)+1(2z+1)}=\frac{1}{(3z^2+1)(2z+1)}$$

Thus poles are $z=-\frac{1}{2}$ and $z=\pm\frac{i}{\sqrt{3}}$

$$\text{Res}\left(z=-\frac{1}{2}\right)=\frac{1}{(6z^3+3z^2+2z+1)'\big|_{z=-\frac{1}{2}}}=\frac{1}{\left|18z^2+6z+2\right|_{z=-\frac{1}{2}}}$$

$$=\frac{1}{18\cdot\frac{1}{4}-6\cdot\frac{1}{2}+2}=\frac{1}{\frac{9}{2}-3+2}=\frac{1}{\frac{9}{2}-1}=\frac{2}{7} \qquad ....(1)$$

$$\text{Res}\left(z=\frac{i}{\sqrt{3}}\right)=\frac{1}{\left(6z^3+3z^2+2z\right)_{z=\frac{i}{\sqrt{3}}}}=\frac{1}{\left|18z^2+6z+2\right|_{z=\frac{i}{\sqrt{3}}}}=\frac{1}{-\frac{18}{3}+\frac{6i}{\sqrt{3}}+2}$$

$$=\frac{1}{-6+2\sqrt{3}i+2}=\frac{1}{-4+2\sqrt{3}i}\times\frac{-4-2\sqrt{3}i}{-4-2\sqrt{3}i}=\frac{-4-2\sqrt{3}i}{16+12}=\frac{-2\sqrt{3}i-4}{28} \quad ....(2)$$

$$\text{Res}\left(z=-\frac{i}{\sqrt{3}}\right)=\frac{1}{\left(18z^2+6z+2\right)_{z=-\frac{i}{\sqrt{3}}}}=\frac{1}{\left|18z^2+6z+2\right|_{z=-\frac{i}{\sqrt{3}}}}=\frac{1}{-\frac{18}{3}-\frac{6i}{\sqrt{3}}+2}$$

$$=\frac{1}{-6-2\sqrt{3}i+2}=\frac{1}{-4-2\sqrt{3}i}\times\frac{-4+2\sqrt{3}i}{-4+2\sqrt{3}i}=\frac{-4+2\sqrt{3}i}{16+12}=\frac{2\sqrt{3}i-4}{28} \quad ....(3)$$

Sum of Residue = $\frac{2}{7}+\frac{-2\sqrt{3}i-4}{28}+\frac{2\sqrt{3}i-4}{28}=\frac{2}{7}-\frac{1}{7}-\frac{1}{7}=0$

Q15. Consider a complex number $z=x+iy$. Where do all the zeros of $\cos(z)$ lie?

(a) On the $x=y$ line. (b) On the $x=0$ line.

(c) On the $y=0$ line. (d) On the $x=-y$ line.

Ans. 15: (c)

Solution.:

$$\cos z=0=\cos\left((2n+1)\frac{\pi}{2}\right)\Rightarrow z=(2n+1)\frac{\pi}{2}\Rightarrow x+iy=(2n+1)\frac{\pi}{2}\Rightarrow y=0$$

Hence zero's of $\cos z$ will lie on x-axis i.e. $y=0$ line.

Thus, 'c' is correct.

Part-B: 3-Mark Questions

Q10. $G=\left(e,a,a^2,b,ba,ba^2\right)$ is a group of order 6. e is the identity element and a is of order 3. What could be the order of the element b?

(a) 3 (b) 2 (c) 1 (d) Can't be determined

Ans. 10: (b)

Solution. :

$G=\left\{e,a,a^2,b,ba,ba^2\right\}$ is of order 6. Let order of $b=p$

Consider group multiplication table

	e	a	a^2	b	ba	ba^2
e						
a						
a^2						
b	b	ba	ba^2	b^2	b^2a	b^2a^2
ba						
ba^2						

In the highlighted row, all the elements of the group should be reproduced. b, ba and ba^2 are already there. Thus

$b^2 \rightarrow$ e

$b^2a \rightarrow$ should be equal to a

$b^2 a^2 \rightarrow a^2$

If $b^2 = e$, $b^2a = a$, $b^2a^2 = a^2$

All six elements are reproduced. Order of b must be 2.

Thus 'b' is correct.

Part-C: 2-Mark Numerical Questions

Q7. Let $M = 2\mathrm{I} + \sigma_x + i\sigma_y + \sigma_z$ is a 2×2 square matrix, where, σ_α denotes α^{th} Pauli matrix, and I denotes the 2×2 identity matrix. It is given that $|u\rangle = \begin{pmatrix} 1 \\ 0 \end{pmatrix}$ and $|v\rangle = \begin{pmatrix} 1 \\ -1 \end{pmatrix}$ are column vectors. What is the value of $\langle u|\sqrt{M}|v\rangle$?

Ans.: 1.73

Solution. :

$$\sigma_x = \begin{pmatrix} 0 & 1 \\ 1 & 0 \end{pmatrix},\ \sigma_y = \begin{pmatrix} 0 & i \\ -i & 0 \end{pmatrix} \text{ and } \sigma_z = \begin{pmatrix} 1 & 0 \\ 0 & -1 \end{pmatrix}$$

$$M = 2\mathrm{I} + \sigma_x + i\sigma_y + \sigma_z = \begin{pmatrix} 2 & 0 \\ 0 & 2 \end{pmatrix} + \begin{pmatrix} 0 & 1 \\ 1 & 0 \end{pmatrix} + \begin{pmatrix} 0 & -1 \\ 1 & 0 \end{pmatrix} + \begin{pmatrix} 1 & 0 \\ 0 & -1 \end{pmatrix} = \begin{pmatrix} 3 & 0 \\ 2 & 1 \end{pmatrix}$$

$$\Rightarrow M = \begin{pmatrix} 3 & 0 \\ 2 & 1 \end{pmatrix}$$

Eigen values of matrix $M = \begin{pmatrix} 3 & 0 \\ 2 & 1 \end{pmatrix}$ are $\lambda = 1$ and 3.

We can write $f(M) = \alpha_0 I + \alpha_1 M = \sqrt{M}$. Thus $\alpha_0 I + \alpha_1 \lambda = \sqrt{\lambda}$.

$\alpha_0 + \alpha_1 = 1$ and $\alpha_0 + 3\alpha_1 = \sqrt{3}$. Solving this we get $\alpha_0 = \frac{3-\sqrt{3}}{2}$ and $\alpha_1 = \frac{\sqrt{3}-1}{2}$.

$$\text{Now } \sqrt{M} = \alpha_0 I + \alpha_1 M = \begin{pmatrix} \frac{3-\sqrt{3}}{2} & 0 \\ 0 & \frac{3-\sqrt{3}}{2} \end{pmatrix} + \begin{pmatrix} \frac{3\sqrt{3}-3}{2} & 0 \\ \frac{2\sqrt{3}-2}{2} & \frac{\sqrt{3}-1}{2} \end{pmatrix}$$

$$\Rightarrow \sqrt{M} = \begin{pmatrix} \frac{3-\sqrt{3}}{2} & 0 \\ 0 & \frac{3-\sqrt{3}}{2} \end{pmatrix} + \begin{pmatrix} \frac{3\sqrt{3}-3}{2} & 0 \\ \frac{2\sqrt{3}-2}{2} & \frac{\sqrt{3}-1}{2} \end{pmatrix} = \begin{pmatrix} \sqrt{3} & 0 \\ \sqrt{3}-1 & 1 \end{pmatrix}$$

$$\left\langle u \middle| \sqrt{M} \middle| \upsilon \right\rangle = \begin{pmatrix} 1 & 0 \end{pmatrix} \begin{pmatrix} \sqrt{3} & 0 \\ \sqrt{3}-1 & 1 \end{pmatrix} \begin{pmatrix} 1 \\ -1 \end{pmatrix} = \begin{pmatrix} 1 & 0 \end{pmatrix} \begin{pmatrix} \sqrt{3} \\ \sqrt{3}-2 \end{pmatrix} = \left(\sqrt{3}\right) = 1.73$$

Part-A: 1-Mark Questions

Part-B: 3-Mark Questions

Q1. Consider a sphere of radius R containing a charge with volume density $\rho(r) = 4\pi \in_0 \alpha / r$. The charge is zero outside the sphere. The electromagnetic potentials (ϕ and $\vec{A}$) inside the sphere may be written in many ways. Which of the following values of ϕ and $\vec{A}$ inside the sphere describe the situation correctly?

(a) $\phi = 0,\ \vec{A} = -2\pi\alpha t\hat{r}$ (b) $\phi = 2\pi\alpha r,\ \vec{A} = 0$

(c) $\phi = 0,\ \vec{A} = -\pi\alpha t\hat{r}$ (d) $\phi = \pi\alpha r, \vec{A} = 0$

Ans.: (a)

Solution.:

$$\because \oint_S \vec{E}.d\vec{a} = \frac{Q_{enc}}{\varepsilon_0} \Rightarrow \left|\vec{E}\right| \times 4\pi r^2 = \frac{1}{\varepsilon_0}\left(\int_0^r \left(\frac{4\pi \in_0 \alpha}{r}\right) \times 4\pi r^2 dr\right)$$

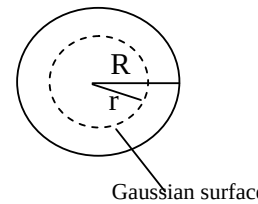

$$\Rightarrow \left|\vec{E}\right| \times 4\pi r^2 = \frac{1}{\varepsilon_0} \times 4\pi\varepsilon_0\alpha \times 4\pi\frac{r^2}{2} \quad \Rightarrow \vec{E} = 2\pi\alpha\hat{r}$$

$$\because \vec{E} = -\vec{\nabla}\phi - \frac{\partial\vec{A}}{\partial t}.$$

Let us verify the given option (a) $\phi = 0,\ \vec{A} = -2\pi\alpha t\hat{r}$,

$$\because \vec{E} = -\vec{\nabla}\phi - \frac{\partial\vec{A}}{\partial t} \Rightarrow \vec{E} = -\vec{\nabla}0 - \frac{\partial(-2\pi\alpha t\hat{r})}{\partial t} \quad \Rightarrow \vec{E} = 2\pi\alpha\ \hat{r}$$

Q9. Consider a spherical shell of radius R having a uniform surface charge density σ. Suppose we construct a spherical Gaussian surface having the same radius R but its centre shifted from the charged sphere by a distance R (see the figure). What is the total electric flux $\oint \vec{E}\cdot d\vec{A}$ through the Gaussian surface?

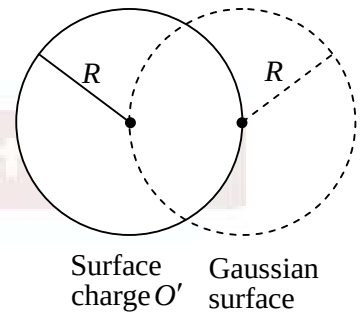

(a) 0 (b) $\pi R^2\sigma$ (c) $2\pi R^2\sigma$ (d) $4\pi R^2\sigma$

Ans.: (b)

Solution.:

Area of the shell under Gaussian Surface is

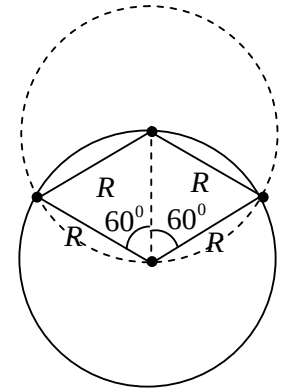

$$A=\int_0^{60^0}\int_0^{2\pi} R^2\sin\theta d\theta d\phi = R^2\left[-\cos\theta\right]_0^{60^0}\times 2\pi$$

$$\Rightarrow A = R^2\left[-\cos 60^0+\cos 0^0\right]\times 2\pi = R^2\left[-\frac{1}{2}+1\right]\times 2\pi$$

$$\Rightarrow A=\pi R^2$$

$$\because \oint_S \vec{E}.d\vec{a}=\frac{Q_{enc}}{\varepsilon_0} \Rightarrow \oint_S \vec{E}.d\vec{a}=\frac{\sigma\times\pi R^2}{\varepsilon_0}$$

There is some correction in given options. So option (b) should be $\frac{\sigma\pi R^2}{\varepsilon_0}$.

Part-C: 2-Mark Numerical Questions

Q2. A circular ring of radius R with total charge Q_{ring} has uniform linear charge density. It rotates about an axis passing through its centre and perpendicular to its plane with a constant angular speed ω. The magnetic field at the centre is found to be B_0. Another thin circular disk of the same radius R has a constant surface charge density with a total charge Q_{disk}. This disk too rotates about the same axis as the ring with the same constant angular speed ω. The magnetic field at the centre in this case is found to be $10^{-3}B_0$. What is the value of Q_{ring}/Q_{disk}?

Ans.: 2000

Solution.:

For circular ring, at centre

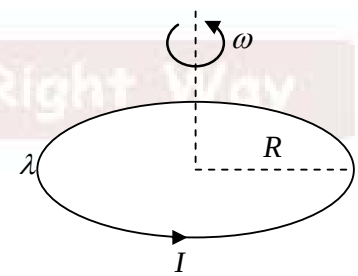

$$B_0=\frac{\mu_0 I}{2R}=\frac{\mu_0}{2R}\times\left(\frac{Q_{ring}}{2\pi R}\times R\omega\right)=\frac{\mu_0 Q_{ring}\omega}{4\pi R}$$

$$\because I=\lambda v=\lambda R\omega=\frac{Q_{ring}}{2\pi R}\times R\omega$$

For circular disk, at centre

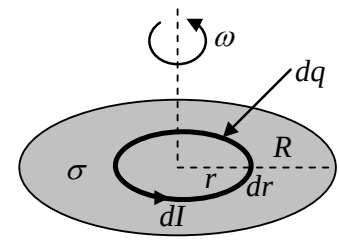

$$dB=\frac{\mu_0 dI}{2r}=\frac{\mu_0}{2r}\frac{dq}{dt}=\frac{\mu_0}{2r}\frac{\sigma\times 2\pi r dr}{2\pi/\omega}=\frac{\sigma\omega\mu_0 dr}{2}$$

$$\Rightarrow B=\frac{\sigma\omega\mu_0 R}{2}=\frac{Q_{disk}}{\pi R^2}\frac{\omega\mu_0 R}{2}=\frac{\mu_0 Q_{disk}\omega}{2\pi R}=10^{-3}B_0$$

$$\Rightarrow \frac{\mu_0 Q_{disk}\omega}{2\pi R} = 10^{-3}\frac{\mu_0 Q_{ring}\omega}{4\pi R} \Rightarrow \frac{Q_{ring}}{Q_{disk}} = 2\times 10^3 = 2000$$

Q5. Assume the earth to be an uniform sphere of radius 6400 km and having a uniform electric permittivity of 8.85×10^{-12} Farad/m. What would be the self capacitance (in micro-Farads) of the earth? Round off your answer to the nearest integer.

Ans.: 712

Solution.:

$$\because C = \frac{Q}{V} = \frac{Q}{Q/4\pi\varepsilon_0 R} = 4\pi\varepsilon_0 R \Rightarrow C = \frac{6400\times 10^3}{9\times 10^9} \approx 712\mu F \qquad \because \frac{1}{4\pi\varepsilon_0} = 9\times 10^9$$

Physics by fiziks
Learn Physics in Right Way

Part-A: 1-Mark Questions

Q9. A conducting sphere of radius R is placed in a uniform electric field E_0 directed along $+z$ axis. The electric potential for outside points is given by $V_{out} = -E_0\left(1-(R/r)^3\right)r\cos\theta$, where r is the distance from the center and θ is the polar angle. The charge density on the surface of the sphere is

(a) $3\in_0 E_0\cos\theta$ (b) $\in_0 E_0\cos\theta$ (c) $-3\in_0 E_0\cos\theta$ (d) $\frac{1}{3}\in_0 E_0\cos\theta$

Ans. 9: (a)

Solution. :

We know perpendicular component of electric field is discontinuous across a surface carrying free charge

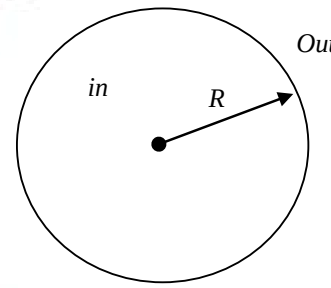

$$E_{out}^{\perp} - E_{in}^{\perp} = \frac{\sigma}{\varepsilon_0} \text{ at } r = R \qquad \text{.....(1)}$$

Inside conducting sphere $E_{in}^{\perp} = 0$

$$E_{out}^{\perp} = -\frac{\partial V_{out}}{\partial r}$$

$$E_{out}^{\perp}\Big|_{r=R} = -\frac{\partial}{\partial r}\left|-E_0 r\cos\theta + E_0\frac{R^3}{r^2}\cos\theta\right|_{r=R} = -\left[E_0\cos\theta - 2E_0\frac{R^3}{r^3}\cos\theta\right]_{r=R}$$

$$= -\left[-E_0\cos\theta - 2E_0\frac{\cancel{R^3}}{\cancel{R^3}}\cos\theta\right] = 3E_0\cos\theta \rightarrow \text{Put in (1) we get}$$

$$\frac{\sigma}{\varepsilon_0} = 3E_0\cos\theta \Rightarrow \sigma = 3\varepsilon_0 E_0\cos\theta$$

Thus, (a) is correct.

Q10. A point charge q is kept d distance above an infinite conducting plane. What is the energy stored in the configuration?

(a) $-\frac{1}{4\pi\in_0}\frac{q^2}{2d}$ (b) $-\frac{1}{4\pi\in_0}\frac{q^2}{4d}$ (c) $\frac{1}{4\pi\in_0}\frac{q^2}{2d}$ (d) $\frac{1}{4\pi\in_0}\frac{q^2}{4d}$

Ans. 10: (b)

Solution.:

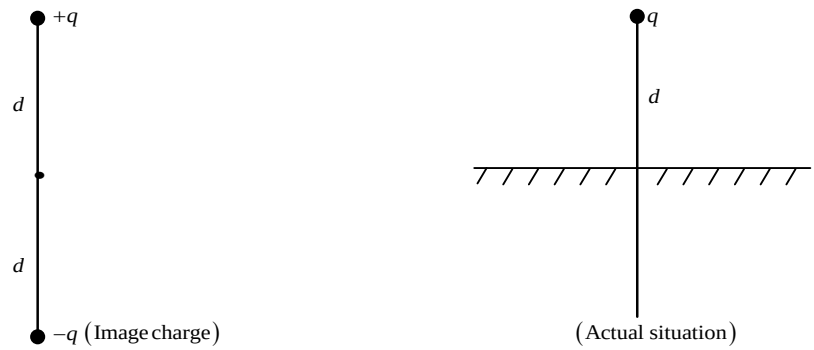

Potential energy of interaction between $=\frac{1}{2}$ a charge (separated by distance $2d$)

Potential energy of interaction between two equal and opposite charges separated by $2d$

$$=\frac{1}{2}\left[\frac{-q\times q}{4\pi\varepsilon_0\cdot 2d}\right]=\frac{-q^2}{4\pi\varepsilon_0\cdot 4d}.$$ Thus (b) is correct.

Q11. Two point charges $2q$ and q are placed inside two spherical cavities of equal radii $R/4$ in a solid conducting sphere of radius R, as shown in the figure. The cavities are placed along a diagonal at distances $R/2$ from the center of the solid sphere. The electrical potential at a point $P, 3R/2$ distance away from the center along the same diagonal, is given by

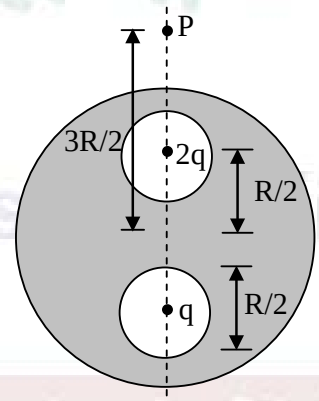

(a) 0

(b) $\frac{1}{4\pi\in_0}\frac{5q}{2R}$

(c) $\frac{1}{4\pi\in_0}\frac{2q}{R}$

(d) $\frac{1}{4\pi\in_0}\frac{3q}{R}$

Ans. 11: (c)

Solution.:

The $2q$ charge will induce $-2q$ charge at the surface of the cavity which will induce $2q$ at the surface of sphere.

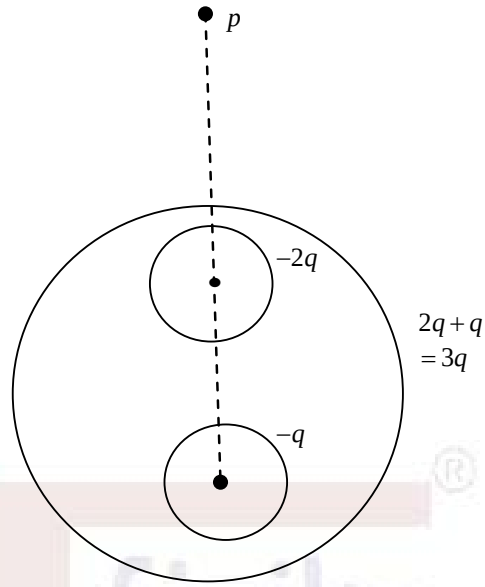

Similarly, 'q' in second cavity will induce 'q' at the surface of the sphere.

Total charge on surface of sphere $= 3q$.

In spherical symmetry on the distance of point under observation from the centre of charge distribution matters.

Thus, $V_{CP} = \frac{3R}{2} = \frac{1}{4\pi\varepsilon_0} \times \frac{\cancel{3}q}{\cancel{3}R/2} = \frac{2q}{4\pi\varepsilon_0 R}$

Hence (c) is correct option.

Part-B: 3-Mark Questions

Q8. A point charge q is fixed at point A inside a hollow grounded conducting spherical shell of radius R, at a distance a from the center C. The force on the sphere due to the presence of the point charge is

(a) $\frac{1}{4\pi \in_0} \frac{q^2 aR}{(R+a)^2 (R-a)^2}$ in magnitude and along $\overrightarrow{AC}$.

(b) $\frac{1}{4\pi \in_0} \frac{q^2 aR}{(R+a)^2 (R-a)^2}$ in magnitude and along $\overrightarrow{CA}$.

(c) $\frac{1}{4\pi \in_0} \frac{q^2}{(R-a)^2}$ in magnitude and along $\overrightarrow{AC}$.

(d) $\frac{1}{4\pi \in_0} \frac{q^2}{(R-a)^2}$ in magnitude and along $\overrightarrow{CA}$.

Ans. 8: (a)

Solution.:

Source charge is at 'a' of magnitude 'Q'

Let unit vector along the line joining centre

and location of 'Q' is $\hat{n}_1$

$\Rightarrow \overrightarrow{OP'} = a\hat{n}_1$

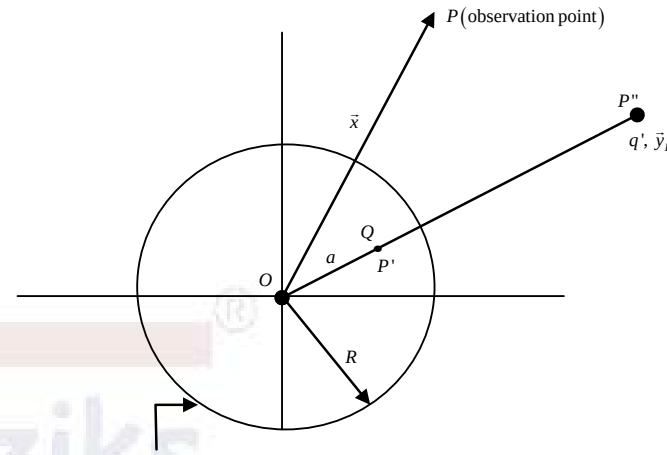

In the corresponding image problem, image charge will be along same direction at $P''(\vec{y})$.

$\overrightarrow{OP''} = \vec{y}_I = y_I\hat{n}_1$

Net potential at $\vec{x}$ is

$$\Phi(\vec{x}) = \frac{Q}{4\pi\varepsilon_0 |x\hat{n} - a\hat{n}_1|} + \frac{q'}{4\pi\varepsilon_0 |x\hat{n} - y_I\hat{n}_1|}$$

Now our boundary condition (original) is that $\Phi(x = R) = 0$, as sphere was grounded.

$$\Phi(\vec{R}) = \frac{Q}{4\pi\varepsilon_0 |R\hat{n} - a\hat{n}_1|} + \frac{q'}{4\pi\varepsilon_0 |R\hat{n} - y_I\hat{n}_1|} = 0$$

$$\Rightarrow \Phi(\vec{R}) = \frac{Q}{4\pi\varepsilon_0 R\left|\hat{n} - \frac{a}{R}\hat{n}_1\right|} + \frac{q'}{4\pi\varepsilon_0 y_I\left|\frac{R}{y_I}\hat{n} - \hat{n}_1\right|} = 0$$

Equality will be satisfied, if

$$\frac{Q}{4\pi\varepsilon_0 R} = -\frac{q'}{4\pi\varepsilon_0 y_I} \Rightarrow q' = \frac{-Q}{R}y_I \qquad \text{and } \frac{a}{R} = \frac{R}{y_I} \Rightarrow y_I = \frac{R^2}{a}$$

Force of attraction between 'Q' and grounded sphere = Force between 'Q' and its image

$$\vec{F}_{Qq'} = \frac{1}{4\pi\varepsilon_0}\frac{Qq'}{|y_I - a|^2}\hat{n}_1 = \frac{1}{4\pi\varepsilon_0}\frac{Q\times\left(-\frac{Q}{\cancel{R}}\cdot\frac{\cancel{R^2}}{a}\right)}{\left|\frac{R^2}{a} - a\right|^2}\hat{n}_1 = -\frac{1}{4\pi\varepsilon_0}\frac{Q^2}{|R^2 - a^2|^2}\cdot R\frac{\cancel{a^2}}{\cancel{a}}\hat{n}_1$$

$$= \frac{1}{4\pi\varepsilon_0}\frac{Q^2 Ra}{(R-a)^2(R+a)^2}(-\hat{n}_1). \qquad -\hat{n}_1 \text{ is along } \overrightarrow{AC}$$

Hence (a) is correct

Q9. A rectangular dielectric slab partly fills two identical rectangular parallel plate capacitors which are maintained at potentials V_1 and V_2 with $V_1 > V_2$. The slab can freely move in the space between the capacitor plates without any friction. Which of the following is true?

(a) The slab will not move.

(b) The slab will move towards lower potential.

(c) The slab will move towards higher potential.

(d) The slab will position itself at $1/V_1 : 1/V_2$ ratio between capacitors 1 and 2.

Ans. 9: (c)

Solution 5:

Force on dielectric $= \frac{1}{2}V^2 \frac{dC}{dx}$. Thus $F \propto V^2$, $\frac{dc}{dx}$ has a small effect.

As $V_1 > V_2$

$\Rightarrow$ Force towards higher potential will be more. This, slab will move towards higher potential.

Part-C: 2-Mark Numerical Questions

Physics by fiziks
Learn Physics in Right Way

Part-A: 1-Mark Questions

Q1. A negative logic is the one in which the 0's and the 1's in the truth tables are interchanged. In such a negative logic, the normal NAND gate would behave like a

(a) NOR gate (b) AND gate

(c) OR gate (d) NAND gate

Ans.: (a)

Solution.:

$+ve$ Logic	$-ve$ Logic
$0 \rightarrow$ Low	$1 \rightarrow$ Low
$1 \rightarrow$ High	$0 \rightarrow$ High

The NAND Gate Truth Table

Inputs		Outputs
A	B	X
0	0	1
0	1	1
1	0	1
1	1	0

Inputs		Outputs
A	B	X
1	1	0
1	0	0
0	1	0
0	0	1

NOR Gate

Q5. An ideal op-amp and a silicon transistor T are used in the following circuit. Find the output voltage V_{out}

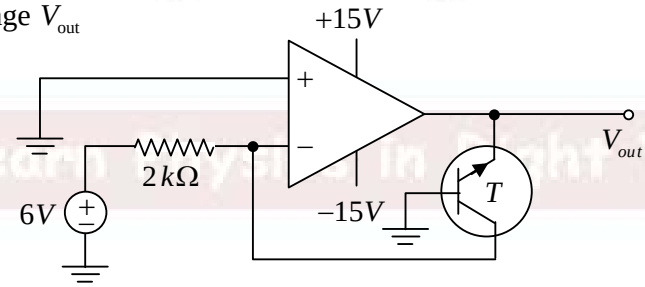

(a) $+5.3\,V$ (b) $-0.7\,V$ (c) $+0.7V$ (d) $-15V$

Ans.: (b)

Solution.:

$\because V_{BE} = 0.7\,\text{Volts}$

$V_{out} = V_{EB} = -V_{BE} = -0.7\,\text{Volts}$

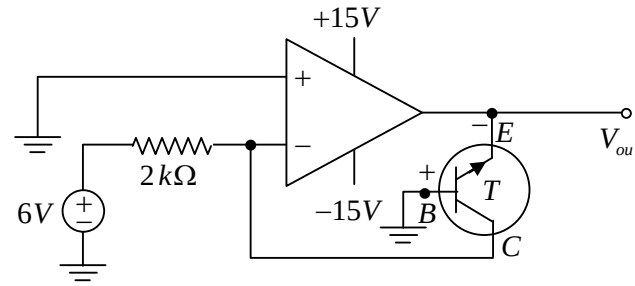

Q12. In an open circuited p-n junction diode, the barrier voltage at the junction is generated due to

(a) Minority carriers in the p and n sides

(b) Majority carriers in the p and n sides

(c) Immobile negative charge in the p-side and positive charge in the n-side

(d) Immobile positive charge in the p-side and negative charge in the n-side

Ans.: (c)

Solution.:

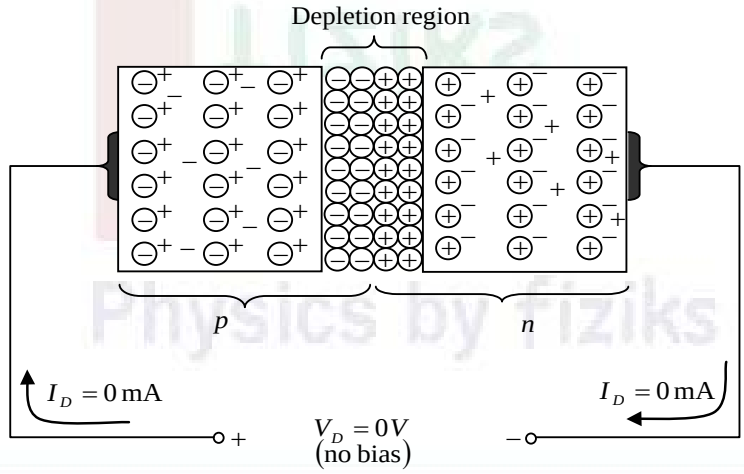

Figure: *p-n* junction with no applied bias.

Q15. In the figure below with ideal op-amps, the value of $R = 10\,k\Omega$, $V_1 = -10\,mV$, and $V_2 = -30\,mV$. Calculate V_{out}.

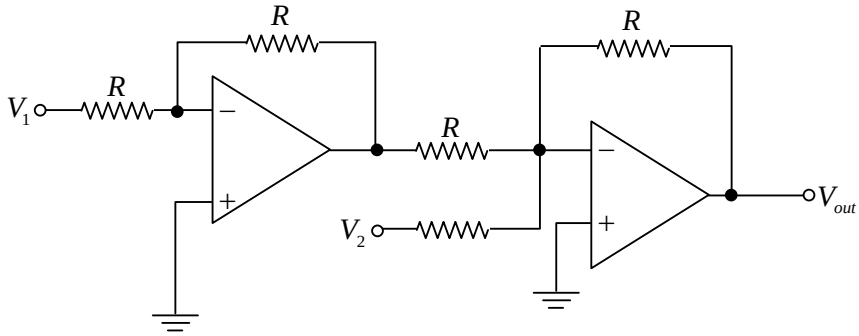

(a) $+40\,mV$ (b) $-40\,mV$ (c) $+20\,mV$ (d) $-20\,mV$

Ans.: (c)

Solution.:

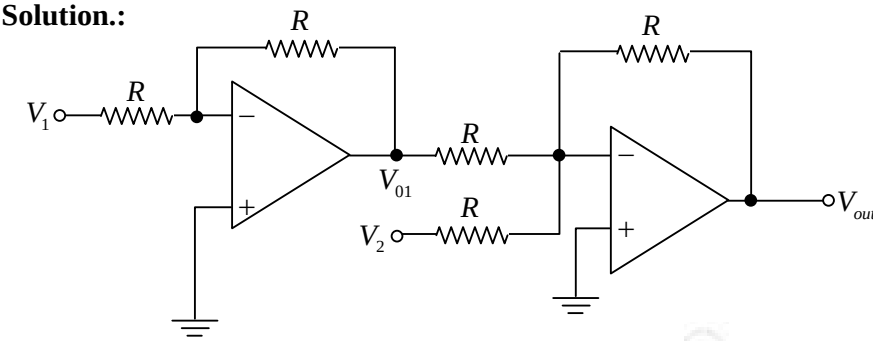

$$V_{01} = -\frac{R}{R}V_1 = -V_1$$

$$V_{out} = V_{01}' + V_2' = -\frac{R}{R}V_{01} - \frac{R}{R}V_2 = -(-V_1) - V_2 = V_1 - V_2$$

$$\Rightarrow V_{out} = V_1 - V_2 = -10\,mV - (-30\,mV) = +20\,mV$$

Part-B: 3-Mark Questions

Q7. The circuit given in the figure below is composed of ideal diodes and resistances R. The input waveform is shown on the left.

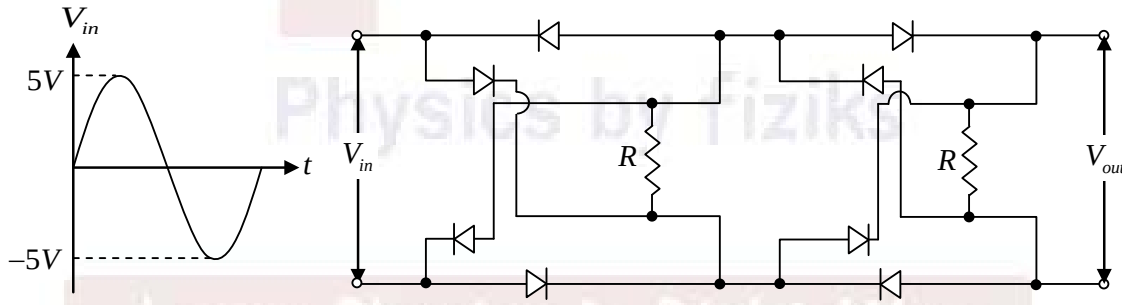

The output waveform would be

(a)

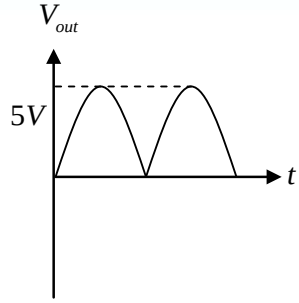

(b)

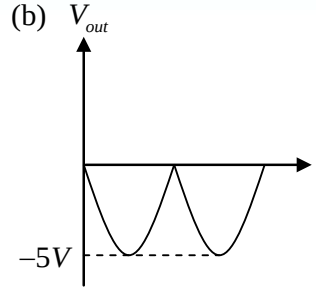

(c)

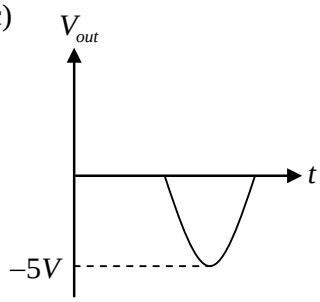

(d)

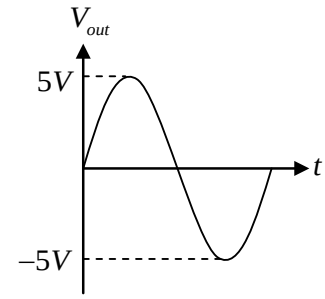

Ans.: (a)

Solution.:

Positive half Cycle: Identify which diode is ON and which diode is OFF.

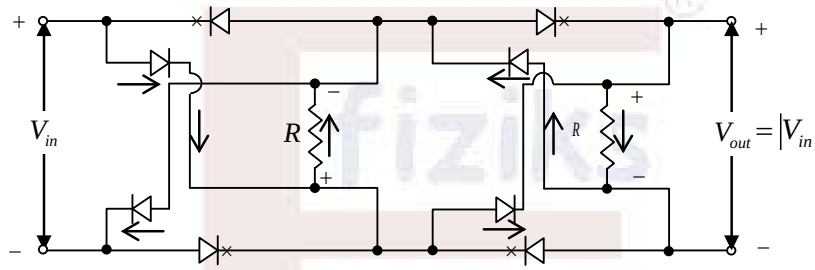

Negative half Cycle: Identify which diode is ON and which diode is OFF.

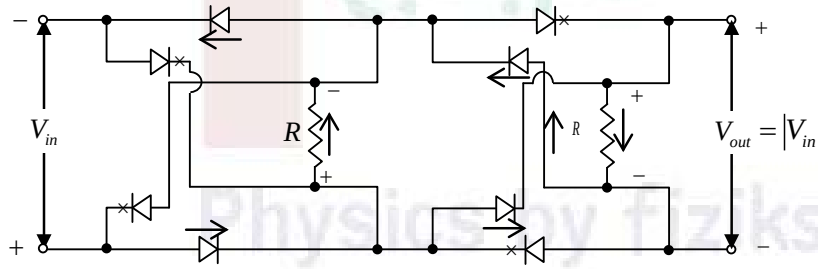

So in both half cycles output will be positive. So option (a) is correct.

Part-C: 2-Mark Numerical Questions

Q9. In the following transistor circuit $R_1 = 0.5\,k\Omega,\ R_E = R_C = 2k\Omega, R_B = 200\,k\Omega$, $\beta = \dfrac{I_C}{I_B} = 100$, $V_{CC} = 10V, V_{BE} = 0.7V$. Determine the V_{CE} in mV.

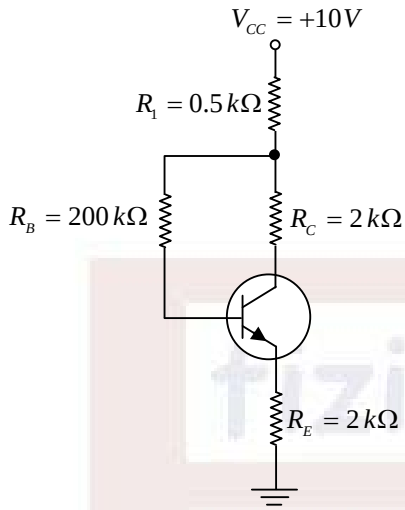

Ans.: 950

Solution.:

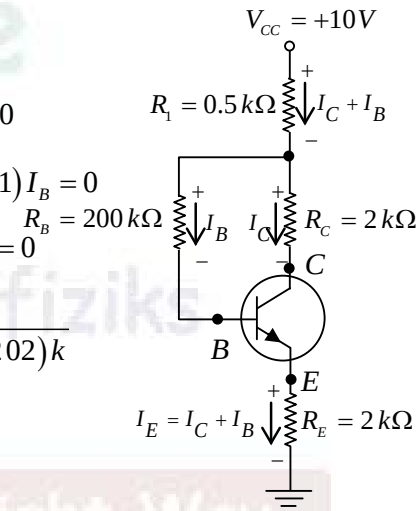

Apply KVL in input section:

$$-10V + 0.5k\left(I_C + I_B\right) + 200k \times I_B + 0.7V + 2k \times I_E = 0$$

$$-10V + 0.5k\left(\beta + 1\right)I_B + 200k \times I_B + 0.7V + 2k \times \left(\beta + 1\right)I_B = 0$$

$$-10V + 0.5k \times 101 I_B + 200k \times I_B + 0.7V + 2k \times 101 I_B = 0$$

$$\Rightarrow I_B = \frac{9.3V}{0.5k \times 101 + 200k + 2k \times 101} = \frac{9.3V}{\left(50.5 + 200 + 202\right)k}$$

$$\Rightarrow I_B = \frac{9.3V}{452.5k} = 0.02mA$$

Apply KVL in output section:

$$-10V + 0.5k\left(\beta + 1\right)I_B + 2k \times \beta I_B + V_{CE} + 2k \times \left(\beta + 1\right)I_B = 0$$

$$\Rightarrow V_{CE} = 10V - \left[0.5k \times 101 + 2k \times 100 + +2k \times 101\right] \times 0.02mA$$

$$\Rightarrow V_{CE} = 10V - \left[50.5 + 200 + +202\right] \times 0.02\ V$$

$$\Rightarrow V_{CE} = 10V - \left(452.5 \times 0.02\right)V = \left(10 - 9.05\right)V = 0.95V = 950mV$$

Part-A: 1-Mark Questions

Q20. The base current in the first transistor of the following circuit having two identical Silicon-based npn transistors of β value 100, is closest to

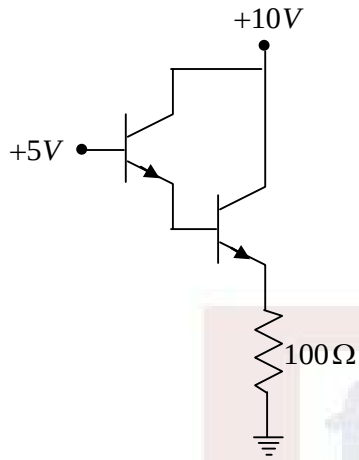

(a) $3.6\,\mu A$ (b) $0.36\,mA$ (c) $5.0\,mA$ (d) $5.0\,\mu A$

Ans. 20: (a)

Solution.:

$$I_{B_1} = \frac{V_{CC} - V_{BE_1} - V_{BE_2}}{\beta_D R_E} \text{ where } \beta_D = \beta_1.\beta_2 = 100 \times 100 = 10^4.$$

$$\Rightarrow I_{B_1} = \frac{5 - 0.7 - 0.7}{10^4 \times 100} = 3.6\mu A$$

Part-B: 3-Mark Questions

Q14. What is the output voltage of the following circuit for the input current $1nA$?

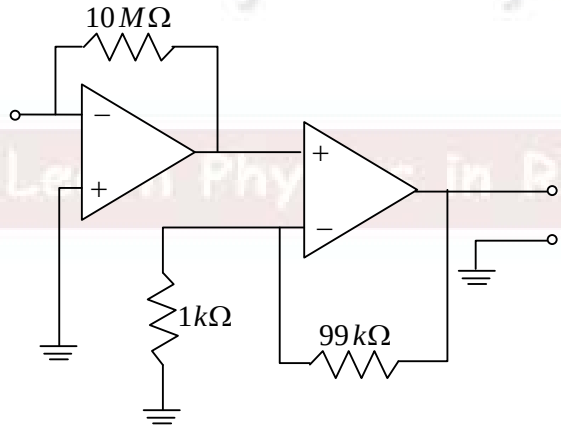

(a) $1mV$ (b) $1V$ (c) $1\mu V$ (d) $1nV$

Ans. 14: (b)

Solution.:

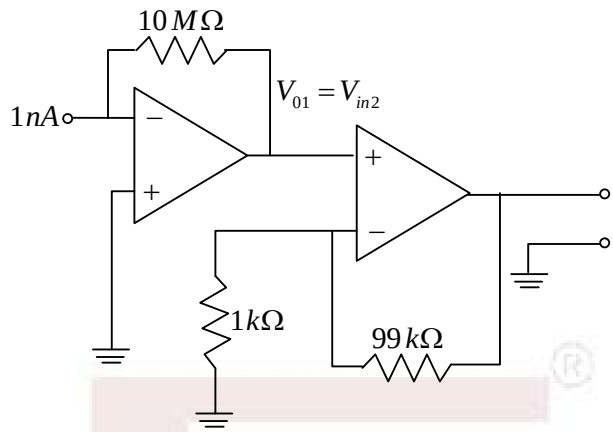

$$\Rightarrow V_{01} = V_{in2} = 1nA \times 10M\Omega = 1\times10^{-9}\times10\times10^{6} = 0.01\,Volts$$

$$\Rightarrow V_0 = \left(1+\frac{R_F}{R_1}\right)V_{in2} = \left(1+\frac{99}{1}\right)\times0.01 = 1\,Volts$$

Part-C: 2-Mark Numerical Questions

Q3. Optical excitation of intrinsic germanium creates an average density of 10^{12} conduction electrons per cm^3 in the material at liquid nitrogen temperature. At this temperature, the electron and hole nobilities are equal, $\mu = 0.5\times10^4\,m^2V^{-1}s^{-1}$. The germanium dielectric constant is 20. If 100 Volts is applied across $1cm$ cube of crystal under these conditions, about how much current, in mA, is observed? [Charge of electron $= 1.6\times10^{-19}C$]

Ans.: 0.08

Q9. A 12-bit analog-to-digital converter has an operating range of 0 to $1V$. The smallest voltage step (in mV, upto two significant digits) that one can record using this converter is

Ans.: 0.24

Solution.:

$$\text{Step size} = \frac{1V}{2^{12}-1} = \frac{1}{4096-1}V = 0.24\,mV$$

H.No. 40-D, G.F., Jia Sarai, Near IIT, Hauz Khas, New Delhi-16
Phone: 011-26865455/+91-9871145498, Website: www.physicsbyfiziks.com, Email: fiziks.physics@gmail.com

Part-A: 1-Mark Questions

1. Let ABCDEF be a regular hexagon. The vector $\overrightarrow{AB}+\overrightarrow{AC}+\overrightarrow{AD}+\overrightarrow{AE}+\overrightarrow{AF}$ will be

(a) 0 (b) $\overrightarrow{AD}$ (c) $2\overrightarrow{AD}$ (d) $3\overrightarrow{AD}$

Ans. 1: (d)

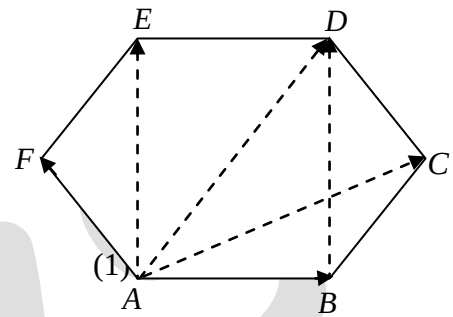

Solution: $\overrightarrow{AF}=\overrightarrow{CD}$ {Being sides}

$\overrightarrow{AE}=\overrightarrow{BD}$

$\overrightarrow{AB}+\overrightarrow{AE}=\overrightarrow{AB}+\overrightarrow{BD}$

$=\overrightarrow{AD}$ {By Δ's law} (1)

$\overrightarrow{AC}+\overrightarrow{AF}=\overrightarrow{AC}+\overrightarrow{CD}$

$=\overrightarrow{AD}$ {By Δ's law} (2)

$\overrightarrow{AD}=\overrightarrow{AD}$ (3)

Adding (1) to (3)

$\overrightarrow{AB}+\overrightarrow{AC}+\overrightarrow{AD}+\overrightarrow{AE}+\overrightarrow{AF}=3\overrightarrow{AD}$

Thus 'd' is correct.

2. What value the following infinite series will converge to?

$$\sum_{n=1}^{\infty}\frac{n^2}{2^n}$$

(a) $\frac{\pi^2}{6}$ (b) $\frac{1}{2}$ (c) 3 (d) 6

Ans. 2: (d)

Solution:

$$S=\sum_{n=1}^{\infty}\frac{n^2}{2^n}=\frac{1^2}{2^1}+\frac{2^2}{2^1}+\frac{3^2}{2^3}+\frac{4^2}{2^4}+\frac{5^2}{2^5}+\frac{6^2}{2^6}+....$$

Let's sum some of the terms

$$S=\frac{\frac{1}{2}+1+\frac{9}{8}+1+\frac{25}{32}+\frac{36}{64}+\frac{7^2}{2^7}+\frac{8^2}{2^3}+.....}{S^1}$$

$$S'=1+\frac{1}{2}+1+\frac{9}{8}+\frac{25}{32}+\frac{36}{64}$$

$$=\frac{3}{2}+\frac{17}{8}+\frac{25}{32}+\frac{36}{64}=\frac{12+17}{8}+\frac{25}{32}+\frac{36}{64}$$

$$=\frac{29}{8}+\frac{25}{32}+\frac{36}{64}=\frac{116+2^5}{32}+\frac{36}{64}=\frac{141}{32}+\frac{36}{64}=\frac{282+36}{64}$$

$$S^1=4.96875$$

$$S=4.96875+\frac{7^2}{2^7}+\frac{8^2}{2^8}+..... \qquad (1)$$

Clearly (a),(b),(c) are ruled out as they are less than 4.

Thus 'd' must be correct option.

3. Consider the matrix $A=\begin{pmatrix}1&0&0&1\\0&-2&0&0\\0&0&-3&0\\1&0&0&4\end{pmatrix}$

What is the determinant of the matrix $\exp(A)$?

(a) 1 (b) $\exp(24)$ (c) 24 (d) 0

Ans. 3: (a)

Solution $A=\begin{pmatrix}1&0&0&1\\0&-2&0&0\\0&0&-3&0\\0&0&0&4\end{pmatrix}$

Det $\left|e^A\right|=e^{Tr(A)}$

$=e^{(1-2-3+4)}=e^0=1.$

Hence (a) is correct option.

Part-B: 3-Mark Questions

4. Consider the infinite series

$$\exp\left[\left(x+\frac{x^3}{3}+.....\right)^2-\left(\frac{x^2}{2}+\frac{x^4}{4}+.....\right)^2\right]$$

Which one of the following represents this series?

(a) $(1+x)^{\ln(1-x)}$

(b) $\exp\left[\sin^2 x-(\cos x-1)^2\right]$

(c) $\exp\left(xe^x\right)$

(d) $(1-x)^{-\ln(1+x)}$

Ans. 4: (d)

Solution Consider firstly and Let.

$$A=\left(x+\frac{x^3}{3}+\frac{x^5}{5}+\frac{x^7}{7}+....\right)^2-\left(\frac{x^2}{2}+\frac{x^4}{4}+\frac{x^6}{6}+\frac{x^8}{8}+....\right)^2$$

Using $a^2-b^2=(a-b)(a-b)$

$$A=\left(x+\frac{x^3}{3}+\frac{x^5}{5}+\frac{x^7}{7}+....+\frac{x^2}{2}+\frac{x^4}{4}+\frac{x^6}{6}+\frac{x^8}{8}+....\right)*\left(x+\frac{x^3}{3}+\frac{x^5}{5}+\frac{x^7}{7}+....-\frac{x^2}{2}-\frac{x^4}{4}-\frac{x^6}{6}-\frac{x^8}{8}-....\right)$$

$$A=\left(x+\frac{x^2}{2}+\frac{x^3}{3}+\frac{x^4}{4}+\frac{x^5}{5}+....\right)*\left(x-\frac{x^2}{2}+\frac{x^3}{3}-\frac{x^4}{4}+\frac{x^5}{5}-\frac{x^6}{6}+.....\right)$$

Using $x+\frac{x^2}{2}+\frac{x^3}{3}+\frac{x^4}{4}+\frac{x^5}{5}+....=-\log_e(1-x)$

and $\quad x-\frac{x^2}{2}+\frac{x^3}{3}-\frac{x^4}{4}+.....=\log_e(1+x)$

We get

$$A=-\log_e(1-x)\times\log_e(1+x)$$

$$e^A=e^{-\log(1-x)\times\log_e(1+x)}$$

$$=\left(e^{\log(1-x)}\right)^{-\log_e(1+x)}$$

$$=(1-x)^{-\log_e(1+x)}$$

Thus (d) is the correct answer.

5. Consider a 4-dimensional vector space V that is a direct product of two 2-dimensional vector spaces V_1 and V_2. A linear transformation H acting on V is specified by the direct product of linear transformations H_1 and H_2 acting on V_1 and V_2, respectively. In a particular basis,

$$H_1 = \begin{pmatrix} 3 & 0 \\ 0 & 2 \end{pmatrix}, \quad H_2 = \begin{pmatrix} 2 & 1 \\ 1 & 1 \end{pmatrix}$$

what is the lowest eigenvalue of H ?

(a) 1 (b) $\frac{3}{2}$ (c) $3-\sqrt{5}$ (d) $\frac{1}{2}\left(3-\sqrt{5}\right)$

Ans. 5: (c)

Solution: $V = V_1 \otimes V_2$

$$H = H_1 \otimes H_2$$

$$H_1 = \begin{pmatrix} 3 & 0 \\ 0 & 2 \end{pmatrix}; H_2 = \begin{pmatrix} 2 & 1 \\ 1 & 1 \end{pmatrix}$$

$$H_1 \otimes H_2 = \begin{pmatrix} 3\begin{pmatrix} 2 & 1 \\ 1 & 1 \end{pmatrix} & 0\begin{pmatrix} 2 & 1 \\ 1 & 1 \end{pmatrix} \\ 0\begin{pmatrix} 2 & 1 \\ 1 & 1 \end{pmatrix} & 2\begin{pmatrix} 2 & 1 \\ 1 & 1 \end{pmatrix} \end{pmatrix}_{4X4}$$

$$H_1 \otimes H_2 = \begin{pmatrix} \begin{pmatrix} 6 & 3 \\ 3 & 3 \end{pmatrix} & \begin{pmatrix} 0 & 0 \\ 0 & 0 \end{pmatrix} \\ \begin{pmatrix} 0 & 0 \\ 0 & 0 \end{pmatrix} & \begin{pmatrix} 4 & 2 \\ 2 & 2 \end{pmatrix} \end{pmatrix}_{4X4} \quad \text{Block Matrix}$$

Eigenvalues of matrix $\begin{pmatrix} 6 & 3 \\ 3 & 3 \end{pmatrix}$ are $\left(\frac{9 \pm 3\sqrt{5}}{2}\right)$ and of matrix $\begin{pmatrix} 4 & 2 \\ 2 & 2 \end{pmatrix}$ are $\left(3 \pm \sqrt{5}\right)$. The smallest eigen value is $\left(3-\sqrt{5}\right)$.

Part-C: 2-Mark Numerical Questions

6. Consider a real tensor T_{ijk} with $i, j, k = 1, ..., 5$. It has the following properties:

$$T_{ijk} = T_{jik} = T_{ikj}, \qquad \sum_i T_{iik} = 0$$

What is the number of independent real components of this tensor?

Ans. 6: 30

Solution $T_{l,j,k}, l, j, k = 1, ...5$

Total number of components $= 5^3 = 125$

Breakup of components:-

(a) l, j, k are all different

Value of l	Posibility for j	Posibility for k	Number of ω_{mp}
1	$4(2\,\text{tos})$	$3(2\,\text{tos})$	12
2	4	3	12
3	4	3	12
4	4	3	12
5	4	3	12
	Total		60

(b) Two index	Second Index	Third Index Options	Components
1	1	$4 = k(2,3,4,5)$	$= 4$

Say $l = 1$

Now if we say $k = 2$. We have the possibility of $112, 121, 231$ components. If we consider $113, 114, 115$ and their permutations number of components $= 4 \times 3 = 12$

For $u = 22, 33, 44, 55$, number of components $= 12 \times 4 = 48$

Total $= 48 + 12 = 60$

(c) All ljk same :- Only five possibilities

$T_{111}, T_{222}, T_{333}, T_{444}, T_{555}$

No of components $=5$

Total $= A + B + C = 60 + 60 + 5 = 125$

Symmetry Application:-

<u>Category A:-</u> Consider $k = 123$.

Using given symmetry we get $\Rightarrow (1) = (2) = (4)$

$T_{123}^{(1)} = T_{213}^{(2)}, T_{123}^{(1)} = T_{132}^{(4)}, T_{213}^{(2)} = T_{132}^{(4)}$

let permute $k = 213 \Rightarrow (1) = (2) = (3)$

Using given symmetry

$T_{213}^{(2)} = T_{123}^{(1)}, T_{213}^{(2)} = T_{231}^{(3)}, T_{123}^{(1)} = T_{231}^{(3)}$

Again permuting $k = 321 \Rightarrow (3) = (5) = (6)$

$T_{321}^{(3)} = T_{231}^{(3)}, T_{321}^{(5)} = T_{312}^{(6)}, T_{231}^{(3)} = T_{312}^{(6)}$

$ijk = 132 \qquad \Rightarrow (4) = (6) = (1)$

$T_{132}^{(4)} = T_{312}^{(6)}, T_{132}^{(4)} = T_{123}^{(1)}, T_{312}^{(6)} = T_{123}^{(1)}$

$ijk = 231 \qquad \Rightarrow (3) = (5) = (2)$

$T_{231}^{(3)} = T_{321}^{(5)}, T_{231}^{(3)} = T_{213}^{(2)}, T_{321}^{(5)} = T_{213}^{(2)}$

$ijk = 312 \qquad \Rightarrow (6) = (4) = (5)$

$T_{312}^{(6)} = T_{132}^{(4)}, T_{312}^{(6)} = T_{321}^{(5)}, T_{132}^{(4)} = T_{321}^{(5)}$

Thus we get $(1) = (2) = (4) = (3) = (5) = (6)$

Permutations of 123 generates 6 diff ijk combinations (or components) all of witch are equal.

Hence out of these (6) (because of equality), only one component is independent.

Hence out of total 60 components of this category, no. of independent components

$= \frac{60}{6} = 10$.

$\sum_i T_{iik=0}$ will not lower the no. of independent components in this category.

Category B:- Consider T_{112}

Permutations	Symmetry Application
$ijk = 112$	$T_{112}^{(1)} = T_{112}^{(1)}, T_{112}^{(1)} = T_{121}^{(2)}, T_{112}^{(1)} = T_{121}^{(2)}$
$ijk = 121$	$T_{121}^{(2)} = T_{211}^{(3)}, T_{121}^{(2)} = T_{112}^{(1)}, T_{211}^{(3)} = T_{112}^{(1)}$
$ijk = 211$	$T_{211}^{(3)} = T_{121}^{(2)}, T_{211}^{(3)} = T_{211}^{(3)}, T_{121}^{(2)} = T_{121}^{(2)} = \left(T_{211}^{(3)}\right)$

Thus three different components are generated which are equal. Hence only one out of these is independent

Consider

T_{112} (independent) T_{112} (independent) T_{114} (independent) T_{115} (dependent of $\sum T_{ijk} = 0$

Thus there independent comp are generated. If we consider

$$\left.\begin{array}{l} T_{22} - \\ T_{33} - \\ T_{44} - \\ T_{55} - \end{array}\right\} 3 \times 4 = 12 \text{ more independent component will be generated.}$$

Thus total independent comp in this category $= 15$

Category C:- Symmetry does not reduce components in this category. Hence all five components of this category are independent. So total independent components

$= 10 + 15 + 5 = 30$

7. Evaluate the integral to the nearest integer

$$I = 100 \int_0^\infty \frac{dt}{t} \left[\exp(-t) - \exp(-10t) \right]$$

Ans. 7: 230

Solution: $I = 100 \int_0^\infty \frac{dt}{t} \left[e^{-t} - e^{-10t} \right]$

$$=100\left[\int_0^\infty t^{-1}e^{-t}dt-\int_0^\infty t^{-1}e^{-10t}dt\right]$$

$$=100\left[L\int_0^\infty\{1.e^{-t}\}ds-\int_0^\infty L\{1.e^{-10t}\}ds\right]$$

$$=100\left[\int_0^\infty\frac{1}{1+s}ds-\int_0^\infty\frac{1}{10+s}ds\right]$$

$$=100\left[\ln\left(\frac{1+s}{10-s}\right)\right]_0^\infty$$

$$=100\left[0-0-0+2.30\right]$$

$$=230$$

Part-A: 1-Mark Questions

1. A spaceship moves away from Earth with a relativistic speed v and fires a shuttle craft in the forward direction at a speed v relative to the spaceship. The pilot of the shuttle craft launches a probe in the forward direction at a speed v relative to the shuttle craft. What will be the speed of the probe relative to the earth?

(a) $3v$

(b) $\dfrac{3v}{\sqrt{1-\dfrac{v^2}{c^2}}}$

(c) $\left(\dfrac{3+v^2/c^2}{1+3v^2/c^2}\right)v$

(d) $\dfrac{2v}{1+v^2/c^2}+v$

Ans. 1: (c)

Solution: $\upsilon_{SE}=\upsilon$ $\quad S\rightarrow$ spaceship

$\upsilon_{CS}=\upsilon$ $\quad E\rightarrow$ Earth

$\upsilon_{PC}=\upsilon$ $\quad C\rightarrow$ shuttle craft

$\upsilon_{pE}=?$ $\quad P\rightarrow$ probe

$$\upsilon_{CE}=\frac{\upsilon_{CS}-\upsilon_{ES}}{1-\dfrac{\upsilon_{CS}\upsilon_{ES}}{c^2}}=\frac{\upsilon-(-\upsilon)}{1-\dfrac{\upsilon(-\upsilon)}{c^2}}$$

$$\upsilon_{CE}=\frac{2\upsilon}{1+\dfrac{\upsilon^2}{c^2}}$$

$$\upsilon_{PE}=\frac{\upsilon_{PC}-\upsilon_{EC}}{1-\dfrac{\upsilon_{PC}\upsilon_{EC}}{c^2}}=\frac{\upsilon-\left[-\dfrac{2\upsilon}{1+\dfrac{\upsilon^2}{c^2}}\right]}{1-\dfrac{\upsilon\left(-\dfrac{2\upsilon}{1+\dfrac{\upsilon^2}{c^2}}\right)}{c^2}}$$

$$= \frac{\upsilon + \frac{\upsilon^3}{c^2} + 2\upsilon}{1 + \frac{\upsilon^2}{c^2}} \times \frac{1}{1 + \frac{2\upsilon^2/c^2}{1+\upsilon^2/c^2}}$$

$$\upsilon_{PE} = \frac{3\upsilon + \frac{\upsilon^3}{c^2}}{1 + \frac{\upsilon^2}{c^2} + \frac{2\upsilon^2}{c^2}} = \upsilon\left[\frac{3+\upsilon^2/c^2}{1+3\upsilon^2/c^2}\right]$$

2. A particle of mass m is subject to the potential $V(x,y,t) = K(x^2+y^2)$, where (x,y) are the Cartesian coordinates of the particle and K is a constant. Which one of the following quantities is a constant of motion?

(a) $\dot{y}x + \dot{x}y$ (b) $\dot{y}x - \dot{x}y$ (c) $\dot{y} + \dot{x}$ (d) $\dot{y}y + \dot{x}x$

Ans. 2: (b)

Solution: $L = \frac{1}{2}m(\dot{x}^2 + \dot{y}^2) - k(x^2+y^2)$

If we choose polar coordinates

$x = r\cos\theta$; $y = r\sin\theta$

$$L = \frac{1}{2}m(\dot{r}^2 + r^2\dot{\theta}^2) - kr^2$$

As $\frac{\partial L}{\partial \theta} = 0$, so θ is the cyclic coordinate $\frac{d}{dt}\left(\frac{\partial L}{\partial \theta}\right) = \frac{dp_\theta}{dt} = 0$

Conjugate momentum

$$p_\theta = \frac{\partial L}{\partial \dot{\theta}} = mr^2\dot{\theta} = \text{constant}$$

$$\vec{p}_\theta = \vec{r} \times m\left(r\dot{\vec{\theta}}\right) = \vec{r} \times m\vec{\upsilon}_\theta$$

$$\vec{p}_\theta = \vec{r} \times m\vec{\upsilon}_\theta = L_z$$

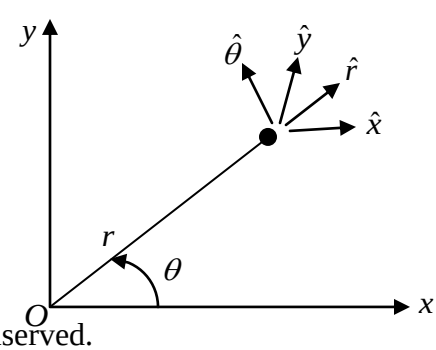

So, angular momentum L_z is conserved.

$$\vec{L} = \vec{r} \times \vec{p} = m\begin{vmatrix} \hat{x} & \hat{y} & \hat{z} \\ x & y & 0 \\ \dot{x} & \dot{y} & 0 \end{vmatrix}$$

$\vec{L} = m(x\dot{y} - y\dot{x})\hat{z}$; $L_z = m(x\dot{y} - y\dot{x}) = \text{constant}$.

3. A particle of mass m having a non-zero angular momentum of magnitude l is subject to a central force potential $V(\vec{r}) = k\ln(r)$, where k is a constant and $r = |\vec{r}|$. What is the radius R at which it will have a circular orbit? Will the circular orbit be stable or unstable?

(a) $R = \frac{l}{\sqrt{2km}}$, unstable orbit (b) $R = \frac{l}{\sqrt{2km}}$, stable orbit

(c) $R = \frac{l}{\sqrt{km}}$, unstable orbit (d) $R = \frac{l}{\sqrt{km}}$, stable orbit

Ans. 3: (d)

Solution: $\vec{F} = -\frac{\partial V}{\partial r}\hat{r} = -\frac{k}{r}\hat{r}$ (attractive)

$$V_{eff} = \frac{l^2}{2mr^2} + V(r)$$

For circular orbit

$$\frac{\partial V_{eff}}{\partial r} = 0;\ \frac{k}{r} - \frac{l^2}{mr^3} = 0;\ r = r_0 = \frac{l}{\sqrt{mk}}$$

$$\frac{\partial^2 V_{eff}}{\partial r^2} = -\frac{k}{r^2} + \frac{3l^2}{mr^4}$$

$$\left.\frac{\partial^2 V_{eff}}{\partial r^2}\right|_{r=r_0} = -\frac{k}{l^2/mk} + \frac{3l^2}{ml^4/m^2k^2} = -\frac{mk^2}{l^2} + \frac{3mk^2}{l^2}$$

$$\left.\frac{\partial^2 V_{eff}}{\partial r^2}\right|_{r=r_0} = +\frac{2mk^2}{l^2} > 0 \quad \text{(minima)}$$

So, circular orbit will stable.

4. If $\vec{x}_A$ and $\vec{x}_B$ are the position vectors of two points on a rigid body, which one of the following is NOT necessarily true?

(a) $\ddot{\vec{x}}_A - \ddot{\vec{x}}_B = 0$ (b) $(\vec{x}_A - \vec{x}_B)\cdot(\dot{\vec{x}}_A - \dot{\vec{x}}_B) = 0$

(c) $\left(\vec{x}_A-\vec{x}_B\right)\cdot\left(\ddot{\vec{x}}_A-\ddot{\vec{x}}_B\right)+\left|\dot{\vec{x}}_A-\dot{\vec{x}}_B\right|^2=0$ (d) $\frac{d}{dt}\left|\vec{x}_A-\vec{x}_B\right|=0$

Ans. 4: (a)

Solution: For a rigid body

$\left|\vec{x}_A-\vec{x}_B\right|=C_1$

$(d)\ \frac{d}{dt}\left|\vec{x}_A-\vec{x}_B\right|=0$

(a) Acceleration of point A and point B is not necessarily equal. For example rotation of a solid rod about a fixed axis

Here $\ddot{x}_A\neq\ddot{x}_B$ because A is at rest while B is rotating about the axis.

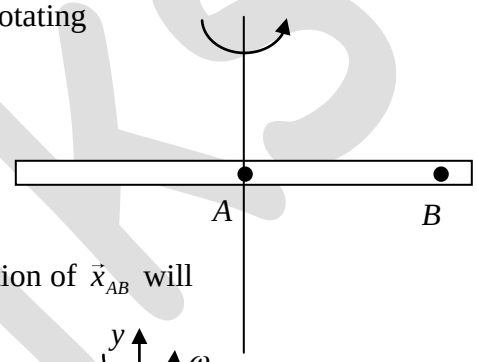

(b) $\vec{x}_{AB}=\vec{x}_A-\vec{x}_B$

$\vec{\upsilon}_{AB}=\dot{\vec{x}}_A-\dot{\vec{x}}_B$

Component of relative velocity along the direction of $\vec{x}_{AB}$ will always be zero in case of rigid body.

$\left(\vec{r}_A-\vec{r}_B\right)\cdot\left(\vec{\upsilon}_A-\vec{\upsilon}_B\right)=0$

So,

$$\left(\vec{x}_A-\vec{x}_B\right)\cdot\left(\dot{\vec{x}}_A-\dot{\vec{x}}_B\right)=0$$

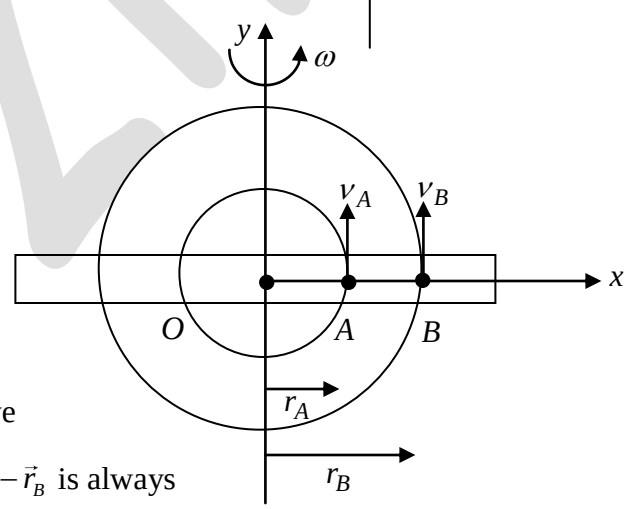

(c) In the above example, one can observe that it is not necessary t hat $\vec{\upsilon}_A=\vec{\upsilon}_B$; but component of relative velocity $\vec{\upsilon}_{AB}=\vec{\upsilon}_A-\vec{\upsilon}_B$ along $\vec{r}_{AB}=\vec{r}_A-\vec{r}_B$ is always zero so, $\left(\vec{x}_A-\vec{x}_B\right)\cdot\left(\dot{\vec{x}}_A-\dot{\vec{x}}_B\right)+\left|\dot{\vec{x}}_A-\dot{\vec{x}}_B\right|^2=0$

as $\dot{\vec{x}}_A-\dot{\vec{x}}_B=0$

5. A solid sphere and a solid cylinder, both of uniform mass density, start rolling down without slipping from rest from the same height along an inclined plane (see figure). Which one of the following statements is correct?

(a) The sphere would reach the bottom faster.

(b) The cylinder would reach the bottom faster.

(c) The heavier one would reach the bottom faster if both have identical radii.

(d) Both the objects would reach the bottom at the same time if their radii are identical.

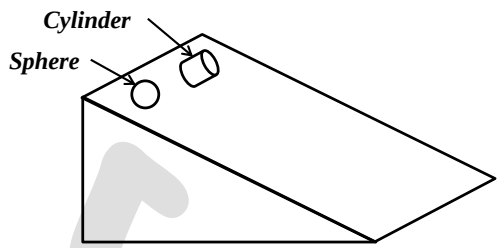

Ans. 5: (a)

Solution: $t = \frac{1}{\sin\theta}\sqrt{\frac{2h}{g}}\sqrt{\beta}$

$$\beta = 1 + \frac{I}{MR^2}$$

$$\beta_s = 1 + \frac{\frac{2}{5}MR^2}{MR^2} = \frac{7}{5} = 1.4$$

$$\beta_c = 1 + \frac{\frac{1}{2}MR^2}{MR^2} = -\frac{3}{2} = 1.5$$

$$\beta_s < \beta_c; \quad t_s < t_c$$

Part-B: 3-Mark Questions

6. A hollow sphere of radius R, with a small hole at the bottom, is completely filled with a liquid of uniform density (see figure). The liquid drains out of the sphere through the hole at an uniform rate in time T. Which one of the following graphs (a, b, c, d) qualitatively represents the height h of the center of mass (of sphere + liquid inside it), measured from the bottom of the sphere with time?

(a)
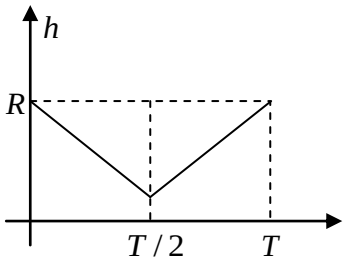

(b)
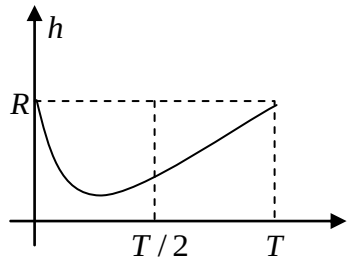

(c)
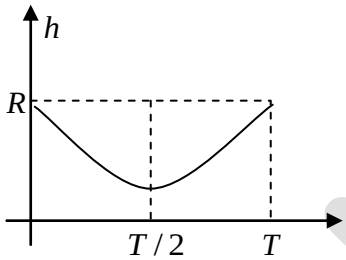

(d)
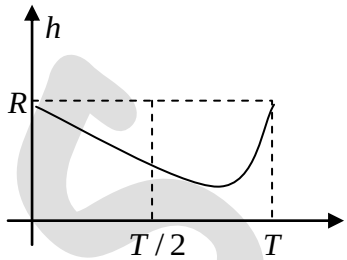

Ans. 6: (d)

Solution: Water is draining at a constant rate.

Here CM of sphere coincides with CM of water at 0 at time $t = 0$

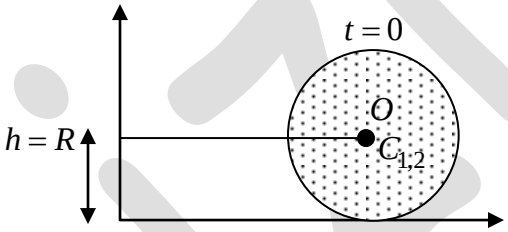

Here CM of the system (A) will be just below the centre pf sphere at $t = \frac{T}{2}$.

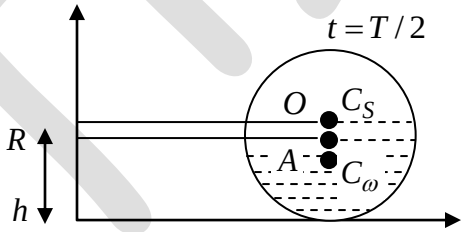

Here CM of the system (B) go down upto a particular time and after that it will start moving up.

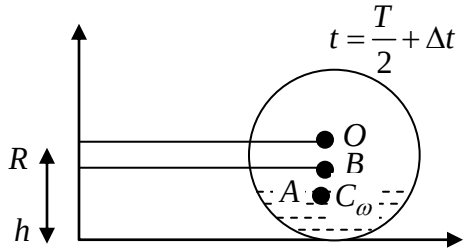

At time $t = T$, when sphere will be completely empty, the CM of the system will be at the centre of the sphere (0).

In the light of four above cases, option (d) is correct.

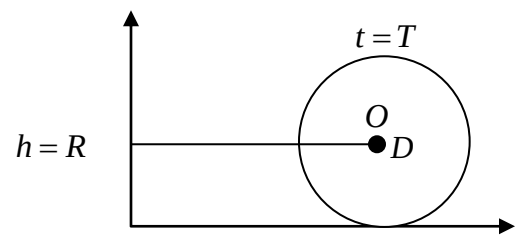

7. Which one of the following sets correctly represents the Hamilton's equations of motion obtained from the Lagrangian $L = \frac{1}{2}m\dot{x}\dot{y} - \frac{1}{2}m\omega^2 xy$?

(a) $m\dot{x} = 2p_y,\ \dot{p}_x = -\frac{1}{2}m\omega^2 y,\ m\dot{y} = 2p_x,\ \dot{p}_y = -\frac{1}{2}m\omega^2 x$

(b) $m\dot{x} = 2p_y,\ \dot{p}_x = -\frac{1}{2}m\omega^2 x,\ m\dot{y} = 2p_x,\ \dot{p}_y = -\frac{1}{2}m\omega^2 y$

(c) $m\dot{x} = p_x,\ \dot{p}_x = -m\omega^2 x,\ m\dot{y} = p_y,\ \dot{p}_y = -m\omega^2 y$

(d) $m\dot{x} = p_y,\ \dot{p}_x = -m\omega^2 y,\ m\dot{y} = p_x,\ \dot{p}_y = -m\omega^2 x$

Ans. 7: (a)

Solution:

$$p_x = \frac{\partial L}{\partial \dot{x}} = \frac{1}{2}m\dot{y} \rightarrow m\dot{y} = 2p_x \rightarrow \dot{y} = \frac{2p_x}{m}$$

$$p_y = \frac{\partial L}{\partial \dot{y}} = \frac{1}{2}m\dot{x} \rightarrow m\dot{x} = 2p_y \rightarrow \dot{x} = \frac{2p_y}{m}$$

$$H = \dot{x}p_x + \dot{y}p_y - L = \frac{2p_x p_y}{m} + \frac{2p_x p_y}{m} - L$$

$$= \frac{4p_x p_y}{m} - \frac{1}{2}m\frac{2p_y}{m}\frac{2p_x}{m} + \frac{1}{2}m\omega^2 xy$$

$$H = \frac{2p_x p_y}{m} + \frac{1}{2}m\omega^2 xy$$

$$\dot{x} = \frac{\partial H}{\partial p_x} \rightarrow \dot{x} = \frac{2p_y}{m} \rightarrow m\dot{x} = 2p_y$$

$$\dot{y} = \frac{\partial H}{\partial p_y} \rightarrow \dot{y} = \frac{2p_x}{m} \rightarrow m\dot{y} = 2p_x$$

$$\dot{p}_x = -\frac{\partial H}{\partial x} \rightarrow \dot{p}_x = -\frac{1}{2}m\omega^2 y$$

$$\dot{p}_y = -\frac{\partial H}{\partial y} \rightarrow \dot{p}_y = -\frac{1}{2}m\omega^2 x$$

8. Two equal masses A and B are connected to a fixed support at the origin by two identical springs with spring constant K and the same unstretched length L. They are also connected to each other by a spring with spring constant K' and unstretched length $\sqrt{2}L$. The equilibrium position, with all springs unstretched, is shown in the figure. If A is constrained to move only along the x axis and B is constrained to move only along the y axis, then the angular frequencies ω_1, ω_2 of the normal modes are

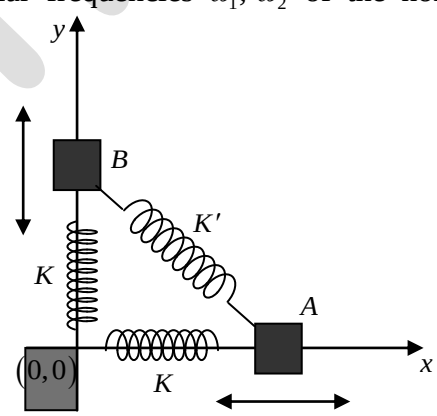

(a) $\omega_1 = \sqrt{\frac{K}{m}}, \omega_2 = \sqrt{\frac{K+K'}{m}}$

(b) $\omega_1 = \sqrt{\frac{K}{m}}, \omega_2 = \sqrt{\frac{2K'}{m}}$

(c) $\omega_1 = \sqrt{\frac{2K}{m}}, \omega_2 = \sqrt{\frac{K+K'}{m}}$

(d) $\omega_1 = \sqrt{\frac{K}{m}}, \omega_2 = \sqrt{\frac{K+2K'}{m}}$

Ans. 8: (a)

Solution: In ease of normal mode both blocks oscillate with the same frequencies. There are two ways in which A and B can oscillate with same frequencies:

(1) Total force acting on block A

$$F = -kx - \sqrt{2}k'x\cos 45^\circ$$

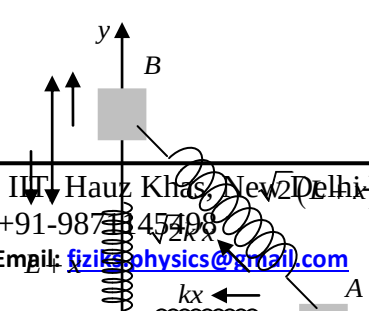

$$ma = -(k + k')x$$

$$a = -\frac{k + k'}{m}x$$

$$\omega_1 = \sqrt{\frac{k + k'}{m}}$$

(2) Total force acting on block A

$$F = -kx$$

$$ma = -kx$$

$$a = -\frac{k}{m}x$$

$$\omega_2 = \sqrt{\frac{k}{m}}$$

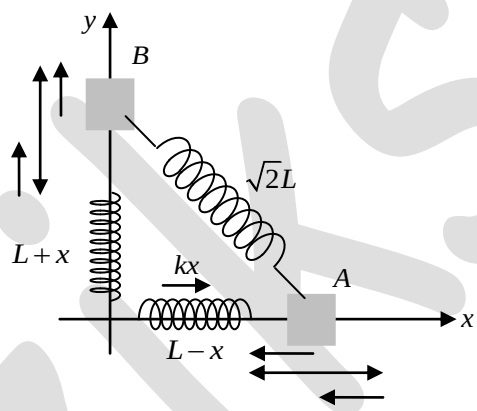

Part-C: 2-Mark Numerical Questions

9. An aircraft flies over the North pole at a constant speed of $900\,Km/hr$. A small bob is hanging freely from the ceiling of the aircraft. What is the angle (in micro-radians) it makes with the Earth's radial direction? (Take the acceleration due to gravity to be $9.81\,m/s^2$).

   Ans: 3707

10. A binary star system consists of two starts with same mass M revolving about a common centre of mass in a circular orbit with velocities much smaller than the speed of light, $c = 3.0 \times 10^8\,m/s$. The axis of the plane of rotation is perpendicular to our line of sight. The wavelength of a particular spectral line from one of the stars is observed to change with a period of 2.40×10^5 seconds. If the ratio of maximum to minimum wavelength of the line is 1.0022, the distance between the stars (in $10^9 m$) to the nearest integer is

Ans. 10: 25

Solution: For the observer, the observed wavelength will increase (or frequency decrees) when source moves away from him.

$$\lambda'_{max} = \lambda \frac{c+\upsilon}{c}$$ (Non-relativistic case as $\upsilon \ll c$)

The observed wavelength decreases (frequency increases) when source moves toward observer:

$$\lambda'_{min} = \lambda \frac{c-\upsilon}{c}$$

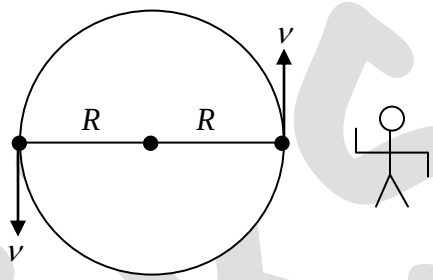

$$\frac{\lambda'_{max}}{\lambda'_{min}} = \frac{c+\upsilon}{c-\upsilon}$$

$$1.0022 = \frac{1+\upsilon/c}{1-\upsilon/c}$$

$$\frac{\upsilon}{c} = \frac{0.0022}{2.0022}$$

$$\upsilon = R\omega = R\frac{2\pi}{T}$$

$$R = \frac{\upsilon T}{2\pi} = \frac{0.0022\times 3\times 10^8 \times 2.4\times 10^5}{2.0022\times 2\times 3.14}$$

$$= \frac{2.2\times 3\times 2.4\times 10^{10}}{2.0022\times 2\times 3.14}$$

$$= 12.59\times 10^9 m$$

Distance between the stars

$$= 2R = 2\times 12.59\times 10^9 m$$

$$= 25.18\times 10^9 m$$

Part-A: 1-Mark Questions

Part-B: 3-Mark Questions

1. Consider a sphere of radius R containing a charge with volume density $\rho(r) = 4\pi \in_0 \alpha / r$. The charge is zero outside the sphere. The electromagnetic potentials (ϕ and $\vec{A}$) inside the sphere may be written in many ways. Which of the following values of ϕ and $\vec{A}$ inside the sphere describe the situation correctly?

   (a) $\phi = 0,\ \vec{A} = -2\pi\alpha t\hat{r}$ (b) $\phi = 2\pi\alpha r,\ \vec{A} = 0$

   (c) $\phi = 0,\ \vec{A} = -\pi\alpha t\hat{r}$ (d) $\phi = \pi\alpha r, \vec{A} = 0$

Ans. 1: (a)

Solution.:

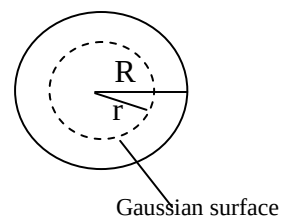

$$\because \oint_S \vec{E}.d\vec{a} = \frac{Q_{enc}}{\varepsilon_0} \Rightarrow |\vec{E}| \times 4\pi r^2 = \frac{1}{\varepsilon_0}\left(\int_0^r \left(\frac{4\pi \in_0 \alpha}{r}\right) \times 4\pi r^2 dr\right)$$

$$\Rightarrow |\vec{E}| \times 4\pi r^2 = \frac{1}{\varepsilon_0} \times 4\pi\varepsilon_0\alpha \times 4\pi \frac{r^2}{2} \quad \Rightarrow \vec{E} = 2\pi\alpha\hat{r}$$

$$\because \vec{E} = -\vec{\nabla}\phi - \frac{\partial\vec{A}}{\partial t}.$$

Let us verify the given option (a) $\phi = 0,\ \vec{A} = -2\pi\alpha t\hat{r}$,

$$\because \vec{E} = -\vec{\nabla}\phi - \frac{\partial\vec{A}}{\partial t} \Rightarrow \vec{E} = -\vec{\nabla}0 - \frac{\partial(-2\pi\alpha t\hat{r})}{\partial t} \quad \Rightarrow \vec{E} = 2\pi\alpha\ \hat{r}$$

2. Consider a spherical shell of radius R having a uniform surface charge density σ . Suppose we construct a spherical Gaussian surface having the same radius R but its centre shifted from the charged sphere by a distance R (see the figure). What is the total electric flux $\oint \vec{E}\cdot d\vec{A}$ through the

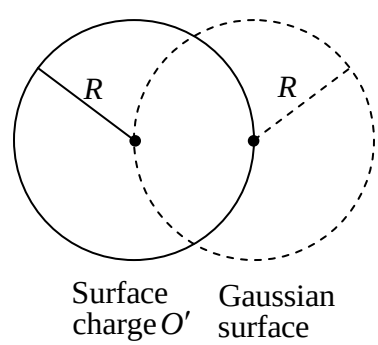

Gaussian surface?

(a) 0 (b) $\pi R^2\sigma$ (c) $2\pi R^2\sigma$ (d) $4\pi R^2\sigma$

Ans. 2: (b)

Solution.:

Area of the shell under Gaussian Surface is

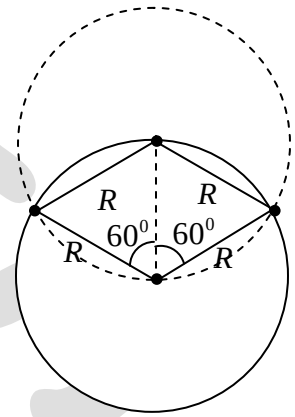

$$A=\int_0^{60^0}\int_0^{2\pi} R^2\sin\theta d\theta d\phi = R^2\left[-\cos\theta\right]_0^{60^0}\times 2\pi$$

$$\Rightarrow A = R^2\left[-\cos 60^0+\cos 0^0\right]\times 2\pi = R^2\left[-\frac{1}{2}+1\right]\times 2\pi$$

$$\Rightarrow A=\pi R^2$$

$$\because \oint_S \vec{E}.d\vec{a}=\frac{Q_{enc}}{\varepsilon_0} \Rightarrow \oint_S \vec{E}.d\vec{a}=\frac{\sigma\times\pi R^2}{\varepsilon_0}$$

There is some correction in given options. So option (b) should be $\frac{\sigma\pi R^2}{\varepsilon_0}$.

Part-C: 2-Mark Numerical Questions

3. A circular ring of radius R with total charge Q_{ring} has uniform linear charge density. It rotates about an axis passing through its centre and perpendicular to its plane with a constant angular speed ω. The magnetic field at the centre is found to be B_0. Another thin circular disk of the same radius R has a constant surface charge density with a total charge Q_{disk}. This disk too rotates about the same axis as the ring with the same constant angular speed ω. The magnetic field at the centre in this case is found to be $10^{-3}B_0$. What is the value of Q_{ring}/Q_{disk}?

Ans. 3: 2000

Solution.:

For circular ring, at centre

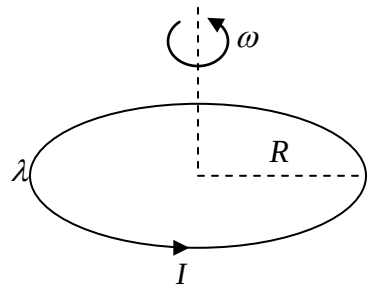

$$B_0 = \frac{\mu_0 I}{2R} = \frac{\mu_0}{2R} \times \left(\frac{Q_{ring}}{2\pi R} \times R\omega \right) = \frac{\mu_0 Q_{ring} \omega}{4\pi R}$$

$$\because I = \lambda v = \lambda R\omega = \frac{Q_{ring}}{2\pi R} \times R\omega$$

For circular disk, at centre

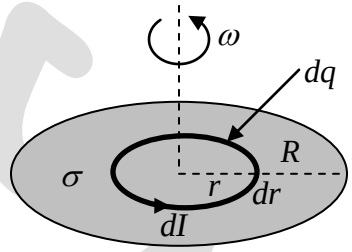

$$dB = \frac{\mu_0 dI}{2r} = \frac{\mu_0}{2r}\frac{dq}{dt} = \frac{\mu_0}{2r}\frac{\sigma \times 2\pi r dr}{2\pi/\omega} = \frac{\sigma\omega\mu_0 dr}{2}$$

$$\Rightarrow B = \frac{\sigma\omega\mu_0 R}{2} = \frac{Q_{disk}}{\pi R^2}\frac{\omega\mu_0 R}{2} = \frac{\mu_0 Q_{disk}\omega}{2\pi R} = 10^{-3} B_0$$

$$\Rightarrow \frac{\mu_0 Q_{disk}\omega}{2\pi R} = 10^{-3}\frac{\mu_0 Q_{ring}\omega}{4\pi R} \Rightarrow \frac{Q_{ring}}{Q_{disk}} = 2\times 10^3 = 2000$$

4. Assume the earth to be an uniform sphere of radius 6400 km and having a uniform electric permittivity of 8.85×10^{-12} Farad/m. What would be the self-capacitance (in micro-Farads) of the earth? Round off your answer to the nearest integer.

Ans. 4: 712

Solution.:

$$\because C = \frac{Q}{V} = \frac{Q}{Q/4\pi\varepsilon_0 R} = 4\pi\varepsilon_0 R \Rightarrow C = \frac{6400\times 10^3}{9\times 10^9} \approx 712\mu F \qquad \because \frac{1}{4\pi\varepsilon_0} = 9\times 10^9$$

Part-A: 1-Mark Questions

1. A particle with energy E is in a bound state of the one-dimensional Hamiltonian $H = -\frac{h^2}{2m}\frac{d^2}{dx^2} + V(x)$. The expectation value of the momentum $\langle p \rangle$

   (a) is always zero.

   (b) depends on the degeneracy of the eigenstate.

   (c) is zero if and only if the potential symmetric $V(-x) = V(x)$.

   (d) depends on the energy E of the eigenstate.

Ans. 3: (c)

Solution: Since the position space wave function is real valued function

$\psi(x) = \langle x | \psi \rangle$

Similarly, $\psi(p) = \langle p | \psi \rangle$, $\langle x, p \rangle = e^{ip_x/\hbar}$

Let us express position space wave function is the momentum Eigen basis

$$\langle x | \psi \rangle = \langle x | \int_{-\infty}^{\infty} dp \, | p \rangle \langle p | \psi \rangle$$

$$\langle x | \psi \rangle = \int_{-\infty}^{\infty} dp \langle x | p \rangle \psi(p) = \int_{-\infty}^{\infty} dp e^{ip_x/\hbar} \psi(p)$$

Or $\langle x | \psi \rangle = \int_{-\infty}^{0} dp e^{ip_x/\hbar} \psi(p) + \int_{0}^{\infty} dp e^{ip_x/\hbar} \psi(p)$

$$\langle x | \psi \rangle = \int_{0}^{\infty} dp e^{-ip_x/\hbar} \psi(-p) + \int_{0}^{\infty} dp e^{ip_x/\hbar} \psi(p)$$

$$\langle x | \psi \rangle = \int_{0}^{\infty} dp (e^{-ip_x/\hbar} \psi(-p) + e^{ip_x/\hbar} \psi(p))$$

This show that above integral is the sum of momentum eigen state. The integral can have real values only when p and $-p$ have symmetry for all momentum state.

2. A quantum particle is moving in one dimension between rigid walls at $x=-L$ and $x=L$, under the influence of a potential (see figure). The potential has the uniform value V_0 between $-a<x<a$, and is 0 otherwise. Which one of the following graphs qualitatively represent the ground state wavefunction of this system? (You can assume that $a \ll L$ and $V_0 \gg \pi^2/8mL^2$).

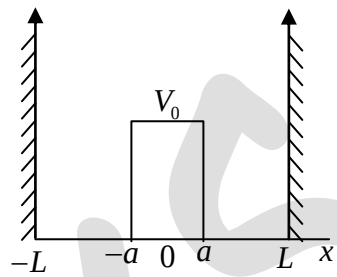

(a)

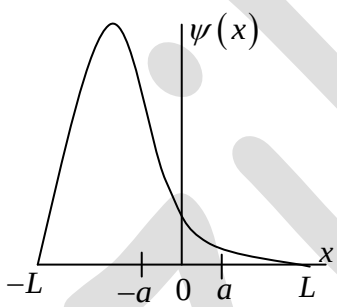

(b)

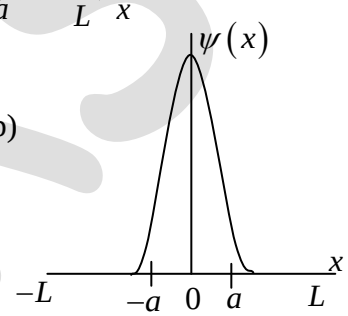

(c)

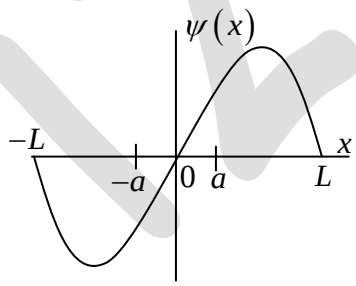

(d)

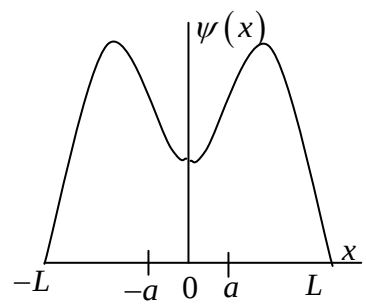

Ans. 2: (d)

Solution: This problem is solved by elimination method.

(a) The potential is symmetric, the ground state wave function must be symmetric. Applying this property, option (a) is eliminated .

(b) The wave function must vanish at Boundary condition $\psi(x=\pm L)=0$. Applying this property, option (b) is eliminated.

(c) The potential at point $x = \pm a$ is V_0, which means $\psi(x = \pm a)$ is finite and the value of $\psi(x = 0)$ is also finite but not zero due to the constant potential. Applying these properties, option (c) is eliminated and option (d) satisfies.

(d) Thus correct option is (d)

3. If $\vec{L}$ is the angular momentum operator in quantum mechanics, the value of $\vec{L} \times \vec{L}$ will be

   (a) 0 (b) $i\hbar\vec{L}$ (c) $|\vec{L}|^2$ (d) $\hbar\vec{L}$

   (angular momentim)

Ans. 3: (b)

Solution: Let the angular momentum vector $\vec{L}$ is defined as

$$\vec{L} = \hat{i}\hat{L}_x + \hat{j}L_y + \hat{k}L_z$$

The value of $\vec{L} \times \vec{L}$ is obtained in following manner.

$$\vec{L} \times \vec{L} = \begin{vmatrix} \hat{i} & \hat{j} & \hat{k} \\ L_x & L_y & L_z \\ L_x & L_y & L_z \end{vmatrix} = \hat{i}\left(L_yL_z - L_zL_y\right) + \hat{j}\left(L_zL_x - L_xL_z\right) + \hat{k}\left(L_xL_y - L_yL_x\right)$$

$$= \hat{i}\left[L_yL_z\right] + \hat{j}\left[L_zL_x\right] + \hat{k}\left[L_xL_y\right]$$

$$= \hat{i}\, i\hbar L_x + \hat{j}\, i\hbar L_y + \hat{k}\, i\hbar L_z$$

$$= i\hbar\left(\hat{i}L_x + \hat{j}L_y + \hat{k}L_z\right) = i\hbar\vec{L}$$

where we have used.

$$\left[L_xL_y\right] = i\hbar L_z; \left[L_yL_z\right] = i\hbar L_x; \left[L_zL_x\right] = i\hbar L_y$$

4. The smallest dimension of the Hilbert space in which we can find operators $\hat{x}, \hat{p}$ that satisfy $[\hat{x}, \hat{p}] = i\hbar$ is (oprtators)

   (a) 1 (b) 3 (c) 4 (d) ∞

Ans. 13: (d)

Solution: The fundamental commutation relation

$$[x, p] = i\hbar$$

Can't be satisfied in any finite dimensional. Hilbert space, as in such space, we would always be able to express the operator *x* and *p* as $x_{mn} = \langle m|x|h\rangle$ and $p_{mn} = \langle m|p|h\rangle$. But for any parts of finite matrices *A*, *B*

$$Tr([A,B])=0$$

Because the trace is cyclic, i.e.

$$Tr([A,B])= Tr([B,A])$$

So, clearly it can't be constant. Thus these commuter $[x, p] = i\hbar$ is true only in the infinite dimension Hilbert space.

5. A one-dimensional box contains three identical particles in the ground state of the system. Find the ratio of total energies of these particles if they were spin-$\frac{1}{2}$ fermions, to that if they were bosons. (identical particle)

(a) 1 (b) $\frac{14}{3}$ (c) 2 (d) $\frac{1}{3}$

Ans. 5: (c)

Solution: The distribution of their identical fermions in the ground state of one dimensional box is shown below.

The ground state energy of the system for fermion is

$$E_F = 2\cdot 1^2 \frac{\pi^2\hbar^2}{2ma^2} + 2^2 \frac{\pi^2\hbar^2}{2ma^2} = \frac{6\pi^2\hbar^2}{2ma^2}$$

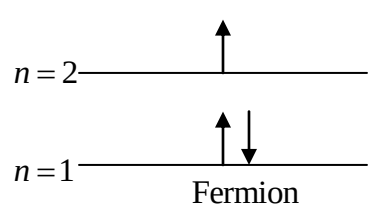

The distribution of there identical Boson I the ground state of one dimensional box is shown below.

The ground state energy of the system for the Boson is

$$E_B = 3\cdot 1^2 \frac{\pi^2\hbar^2}{2ma^2} = 3\frac{\pi^2\hbar^2}{2ma^2}$$

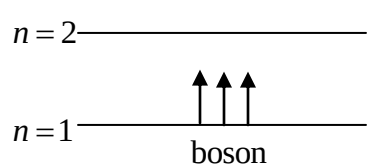

The ratio of total ground state energies of the system the fermions and boson is

$$\frac{E_F}{E_B}=\frac{\left(6\pi^2\hbar^2/2ma^2\right)}{\left(3\pi^2\hbar^2/2ma^2\right)}=2$$

Part-B: 3-Mark Questions

6. Consider the normalized wave function $\psi = a\psi_0 + b\psi_1$ for a one-dimensional simple harmonic oscillator at some time, where ψ_0 and ψ_1 are the normalized ground state and the first excited state respectively, and a, b are real numbers. For what values of a and b, the magnitude of expectation value of x, i.e. $|\langle x\rangle|$, is maximum? (harmonic)

   (a) $a=-b=1/\sqrt{2}$ (b) $a=b=1/\sqrt{2}$

   (c) $a=1,\ b=0$ (d) $a=0,\ b=1$

Ans. 6: (b)

Solution: Here, Let we have $a=c_0;\ \ b=c_1$

Consider the normalized wave function

$$\psi(x)=c_0\phi_0(x)+c_1\phi_1(x)$$

where, c_0 and c_1 are real. Since $\psi(x)$ is normalized we have.

$$\langle\psi(x)|\psi(x)\rangle=c_0^2\langle\phi_o(x)|\phi_o(x)\rangle+c_1^2\langle\phi_1(x)|\phi_1(x)\rangle=1$$

or $\quad c_0^2+c_1^2=1.$

The expectation value of x is given by

$$\langle\psi(x)|x|\psi(x)\rangle=c_0^2\langle\phi_0(x)|x|\phi_0(x)\rangle+c_1^2\langle\phi_1(x)|x|\phi_1(x)\rangle+c_0c_1\langle\phi_0(x)|x|\phi_1(x)\rangle+c_0c_1\langle\phi_1(x)|x|\phi_0(x)\rangle$$
$$=2c_0c_1\langle\phi_0(x)|x|\phi_1(x)\rangle$$

$$=\left\langle(c_0+c_1)^2-1\right\rangle\langle\phi_0(x)|x|\phi_1(x)\rangle$$

The become maximum only

$\langle\phi_0(x)|x|\phi_1(x)\rangle$; when $c_0=c_1=a=b\dfrac{1}{\sqrt{2}}$.

7. A particle is in the nth energy eigenstate of an infinite one-dimensional potential well between $x=0$ and $x=L$. Let P be the probability of finding the particle between $x=0$ and $x=1/3$. In the limit $n\to\infty$, the value of P is

(a) $1/9$ (b) $2/3$ (c) $1/3$ (d) $1/\sqrt{3}$

Ans. 7: (a)

Solution: The nth energy eigenstate of a particle in an infinite one dimensional potential well between $x=0$ and $x=L$ is given by

$$\psi_n(x)=\sqrt{\frac{2}{L}}\sin\frac{n\pi x}{L}$$

The probability of finding the particle in the region $x=0$ and $x=L/3$ is

$$p(0<x<L/3)=\left|\langle\psi_n(x)|\psi_n(x)\rangle\right|$$

$$=\left|\frac{2}{L}\int_0^{L/3}\sin^2\frac{n\pi x}{L}dx\right|$$

$$=\left|\frac{1}{L}\int_0^{L/3}\left(1-\cos\frac{2n\pi x}{L}\right)dx\right|$$

$$\left|\frac{1}{L}\left[x-\frac{L}{2n\pi}\sin\frac{2n\pi x}{L}\right]_0^{L/3}\right|$$

$$=\left|\frac{1}{L}\left[\frac{L}{3}-\frac{L}{2n\pi}\sin\frac{2n\pi}{3L}\right]\right|$$

The probability p in the limit $n\to\infty$ is

$$p=\left|\frac{1}{L}\left[\frac{L}{3}-\lim_{n\to\infty}\frac{\sin 2n\pi/3L}{3(2n\pi/3L)}\right]\right|$$

$$=\left|\frac{1}{L}\cdot\frac{L}{3}\right|=\frac{1}{3}$$

Part-C: 2-Mark Numerical Questions

8. The uncertainty Δx in the position of a particle with mass m in the ground state of a harmonic oscillator is $2\hbar / mc$. What is the energy (in units of $10^{-4} mc^2$) required to excite the system to the first excited state? (Harmonic Osicllator)

Ans. 8:

Solution: A particle is moving in the one dimensional Harmonic oscillator. The energy level of the particle is given by.

$$E_n = \left(n + \frac{1}{2}\right)\hbar\omega \tag{1}$$

The ground state energy of the particle is

$$E_0 = \frac{1}{2}\hbar\omega \tag{2}$$

Similarly, the excited state energy of the particle is

$$E_1 = \frac{3}{2}\hbar\omega \tag{3}$$

The energy required to excite system to excited the first excited state is

$$0 - E = E_1 - E_0 = \hbar\omega \tag{4}$$

But according to question, we have

$$(\Delta x) = \sqrt{\langle x^2 \rangle - (\langle x \rangle)^2} \Rightarrow (\Delta x)^2 = \frac{\hbar}{2m\omega}$$

or

$$\left(\frac{2\hbar}{mc}\right)^2 = \frac{\hbar}{2m\omega} \Rightarrow \omega \ \frac{1}{2}\frac{\hbar}{m}\left(\frac{mc}{2\hbar}\right)^2 \tag{5}$$

Inserting the value of ω in the expression of ΔE,

We get

$$\Delta E = \hbar\omega = \hbar \cdot \frac{1}{2}\frac{\hbar}{m}\left(\frac{mc}{2\hbar}\right)^2 = \frac{1}{8}mc^2$$

$$= 1250 \times 10^{-4} mc^2.$$

Part-A: 1-Mark Questions

1. An ideal gas at temperature T is composed of particles of mass m, with the x-component of velocity v_x. The average value of $|v_x|$ is KTG

(a) 0 (b) $\sqrt{3k_BT/m}$ (c) $\sqrt{k_BT/2\pi m}$ (d) $\sqrt{2k_BT/\pi m}$

Ans. 1: (d)

Solution: $$\langle |u_x| \rangle = \frac{2\int_0^\infty |u_x|\, p(u_x)}{\int_{-\infty}^{\infty} p(u_x) = 1} = \frac{I_1}{T_2}$$

$$P(u_x) = \frac{dN_{u_x}}{N} = \left[\frac{m}{2\pi KT}\right]^{1/2} e^{-\frac{mu_x^2}{2K_0T}} du_x$$

$$I_1 = 2\left[\frac{m}{2\pi KT}\right]^{1/2} \int_0^\infty |u_x| e^{-\frac{mu_x^2}{2KT}} du_x$$

$$= 2\left[\frac{m}{2\pi KT}\right]^{1/2} \frac{1}{2}\frac{2KT}{m} = \sqrt{\frac{2KT}{\pi m}}$$

(d) is correct

2. Consider a system consisting of three non-degenerate energy levels, with energies $0, \in$ and $2\in$. In the limit of infinite temperature $T \to \infty$, the probability of finding a particle in the ground state is Canonical assmble

(a) 0 (b) $1/2$ (c) $1/3$ (d) 1

Ans. 2: (c)

Solution: $Z = He^{-\beta\varepsilon} + e^{-2\beta\varepsilon}$ (1)

$$p(\varepsilon = 0) = \frac{e^{-\beta\cdot 0}}{Z}$$

$$= \frac{1}{1 + e^{-\frac{\varepsilon}{KT}} + e^{\frac{-2\varepsilon}{KT}}}$$

$T \to \infty$

2ε

ε

0

$$= \frac{1}{1+1+1} = \frac{1}{3}$$

$\therefore$ (c) is CORRECT

3. The free energy density of a gas at a constant temperature is given by $f(\rho) = C\rho \ln(\rho/\rho_0)$, where ρ represents the density of the gas, while C and ρ_0 are positive constants. The pressure of the system is thermodynamics/maxwell

(a) $C\rho$ (b) $C\rho^2/\rho_0$ (c) $C\rho_0 \ln(\rho/\rho_0)$ (d) $C\rho \ln(\rho/\rho_0)$

Ans. 3: (a)

Solution: $f(\rho) = C\rho \ln\left(\frac{\rho}{\rho_0}\right)$; ρ in density of gas c & ρ_0 are positive constants.

$$dF = -SdT - PdV$$

At fix T, $P = -\left(\frac{\partial F}{\partial V}\right)$

$$F = Vf(\rho) = VC\rho \ln(\rho/\rho_0)$$

$$\rho = \frac{M}{V};\ F = CM \ln(M/V\rho_0)$$

$$P = -\left(\frac{\partial F}{\partial V}\right)_T = -CM \frac{\rho_0 V}{M} \frac{M}{\rho_0} \left\{-\frac{1}{V^2}\right\}$$

$$= CM/V = C\rho$$

(a) Is correct

Part-B: 3-Mark Questions

4. M grams of water at temperature T_a is adiabatically mixed with an equal mass of water at temperature T_b, keeping the pressure constant. Find the change in entropy of the system (specific heat of water is C_p). Entropy

(a) $\Delta S = MC_p \ln\left[1 - \frac{(T_a - T_b)^2}{4T_aT_b}\right]$ (b) $\Delta S = MC_p \ln\left[1 + \frac{(T_a + T_b)^2}{4T_aT_b}\right]$

(c) $\Delta S = MC_p \ln\left[1+\frac{(T_a-T_b)^2}{4T_aT_b}\right]$ (d) $\Delta S = MC_p \ln\left[\frac{T_a+T_b}{(4T_aT_b)^{1/2}}\right]$

Ans. 4: (c)

Solution: $M, T_a \leftrightarrow M, T_b$ let $T_a > T_b$

$$MC_p(T_a - T_f) = MC_p(T_f - T_b)$$

$$= T_f = \frac{T_a+T_b}{2}$$

$$\Delta S_1 = MC_p \ln\left(\frac{T_f}{T_a}\right) = MC_p \ln\frac{T_a+T_b}{2T_a}$$

$$\Delta S_2 = MC_p \ln\left(\frac{T_f}{T_a}\right) = MC_p \ln\frac{T_a+T_b}{2T_b}$$

$$\Delta S = \Delta S_1 + \Delta S_2 = MC_p \ln\frac{(T_a+T_b/2)^2}{T_aT_b}$$

$$= MC_p \ln\frac{(T_a+T_b)^2}{4T_aT_b}$$

$$= MC_p \ln\left[\frac{4T_aT_b+T_a^2+T_b^2-2T_aT_b}{4T_aT_b}\right]$$

$$= MC_p \ln\left[1+\frac{(T_a-T_b)^2}{4T_aT_b}\right]$$

(c) is CORRECT

5. A large box, of volume V is fitted with a vertical glass tube of cross-sectional area A, in which a metal ball of mass m fits exactly. The box contains an ideal gas at a pressure slightly higher than atmospheric pressure P because of the weight of the ball. If the ball is displaced slightly from equilibrium, find the angular frequency ω of simple harmonic oscillations. Assume adiabatic behaviour, with ratio of specific heats $\gamma = C_P / C_V$. 1st law of thermodynamics

(a) $\omega = \sqrt{\dfrac{A^2\left(P + mg/A\right)}{2\gamma Vm}}$

(b) $\omega = \sqrt{\dfrac{2\gamma A^2\left(P + mg/A\right)}{Vm}}$

(c) $\omega = \sqrt{\dfrac{A^2\left(P + mg/A\right)}{\gamma Vm}}$

(d) $\omega = \sqrt{\dfrac{\gamma A^2\left(P + mg/A\right)}{Vm}}$

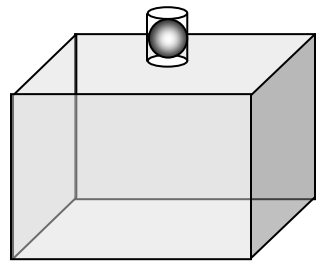

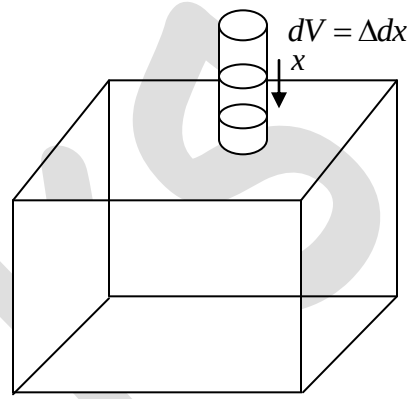

Ans. 5: (d)

Solution: Let initial pressure be P_1

$$P_1 = P + \frac{mg}{A}$$

$$V_1 = V$$

Final pressure when ball is displaced slightly above

$P_2 = P_1 + \Delta P$ pressure $\uparrow$, dx

$V_2 = V - \Delta V$, $\Delta V = Adx$

Applying elation

$$P_1 V_1^r = P_2 V_2^r$$

$$= \left(P_1 + \Delta P\right)\left(V - \Delta V\right)^r$$

$$= P_1 V^r \left[1 + \frac{\Delta P}{P_1}\right]\left[1 - \frac{\Delta V}{V}\right]^r$$

$$1 = \left[1 + \frac{\Delta P}{P_1}\right]\left[1 - r\frac{\Delta V}{V}\right]$$

$$= 1 - r\frac{\Delta V}{V} + \frac{\Delta P}{P_1} - r\frac{\Delta P}{P_1}\frac{\Delta V}{V}$$

$$\Delta P = rp_1 \frac{\Delta V}{V} \qquad (3)$$

Restoring five on bell $\neq h$

$$F = -A\Delta P = \frac{-rAP_1}{V}Ax$$

$$= \frac{-rA^2P_1x}{V}$$

acceleration of the ball is

$$a = \frac{f}{m} = -\frac{rA^2P_1}{mv}x$$

$$a \propto x$$

$$\therefore\ SHM$$

$$\therefore \omega = \sqrt{\frac{rA^2}{mV}P_1}$$

$$\omega = \sqrt{\frac{rA^2}{mV}\left(p + \frac{mg}{A}\right)}$$

(d) is CORRECT

Part-C: 2-Mark Numerical Questions

6. Five distinguishable particles are distributed in energy levels E_1 and E_2 with degeneracy of 2 and 3 respectively. Find the number of microstates with three particles in energy level E_1 and two particles in E_2. Micro cano

Ans. 6: 720

Solution: No of distinguishable particles $= 5$

Out of these $5, 3$ have to be is E_1 and 2 is E_2.

$\therefore$ possible arrangements are

$$\Omega_1 = \frac{5!}{3!2!} = \frac{5\cdot 4\cdot 3!}{3!\cdot 2} = 10$$

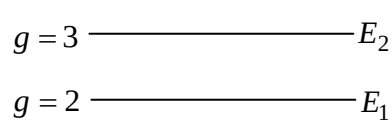

Confidence of degeneracy,

Level E_1 is 2 fold degenerate

No of ways particle 1 can be placed $= 2$

No of ways particle 2 can be placed $= 2$

No of ways particle 3 can be placed $=2$

$\therefore$ No of ways of arranging 3 particles E_1 with $g=2$ are $=2^3$

Similarly no of ways of arranging 2 particles E_2 with $g=3$ are $=3^2$

$\therefore$ Total microstates for arranging 5 particles Total $=\frac{5!}{3!2!}2^3 3^2=720$

7. A thin tube of length $1080\,mm$ and uniform cross-section is sealed at both ends, and placed horizontally on a table. At the exact center of the tube is a mercury (Hg) pellet of length $180\,mm$. The pressure of the air on both sides of the mercury pellet is P_0. When the tube is held at an angle of 60 degrees with the vertical, the length of the air column above and below the Hg become $480\,mm$ and $420\,mm$, respectively. Assuming the temperature of the system to be constant, calculate the pressure P_0 in mm of Hg. Basic thermodynamics

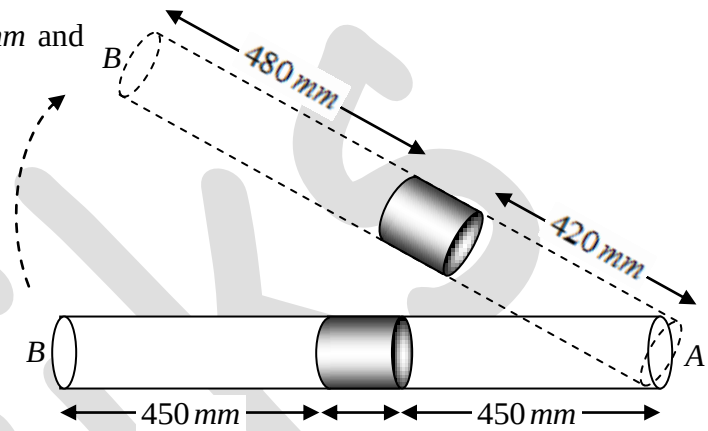

Ans: 672

Solution: When tube is held at an angle of 60° with vertical

Length of upper past $=\ell_1=48\,cm$

Length of Lower past $=\ell_2=42\,cm$

When tube lies horizontal, length of air column on both sides $=\ell_0=\frac{\ell_1+\ell_2}{2}=\frac{48+42}{2}=45\,cm$

Let P_1 and P_2 be the pressures in upper and lower parts when tube is kept inclined. As T is uniform throught, we apply Boyle is low $PV=cons$.

For upper past $P_1\ell_1 A=P_0\ell_0 A$

$$P_1 = \frac{P_0 \ell_0}{\ell_1} \qquad (1)$$

Similarly for the lower past,

$$P_2 \ell_2 A = P_0 \ell_0 A \Rightarrow P_2 = \frac{P_0 \ell_0}{\ell_2} \qquad (2)$$

When the tube is held uestically at 60° the Hg column will be displaced to lower end and

$$P_2 = P_1 + \frac{mg}{A}\cos 60^\circ$$

$$\frac{P_0 \ell_0}{\ell_2} = \frac{P_0 \ell_0}{\ell_1} + \frac{mg}{2A}$$

$$P_0 \ell_0 \left[\frac{1}{\ell_0} - \frac{1}{\ell_1}\right] = \frac{mg}{2A}$$

$$P_0 = \frac{mg}{2A\ell_0\left(\frac{1}{\ell_0} - \frac{1}{\ell_1}\right)}$$

the pressure P_0 is equal to height h of meanly

$P_0 = \delta g h$, also $m = (18cm)A\delta$

$$\therefore \delta g h = \frac{18A\delta g}{2A\ell_0\left(\frac{1}{\ell_2} - \frac{1}{\ell_1}\right)} = \frac{18}{2\ell_0\left[\frac{1}{\ell_2} - \frac{1}{\ell_1}\right]}$$

$$h = \frac{18}{2\ell_0\left[\frac{1}{\ell_2} - \frac{1}{\ell_1}\right]} = \frac{18cm}{2\times 45cm\left[\frac{1}{42} - \frac{1}{48}\right]}$$

$$h = 67.11cm$$

$P_0 = 67.11cm$ of Hg

Part-A: 1-Mark Questions

1. A negative logic is the one in which the 0's and the 1's in the truth tables are interchanged. In such a negative logic, the normal NAND gate would behave like a

(a) NOR gate (b) AND gate

(c) OR gate (d) NAND gate

Ans. 1: (a)

Solution.:

$+ve$ Logic	$-ve$ Logic
$0 \rightarrow$ Low	$1 \rightarrow$ Low
$1 \rightarrow$ High	$0 \rightarrow$ High

The NAND Gate Truth Table

Inputs		Outputs
A	B	X
0	0	1
0	1	1
1	0	1
1	1	0

Inputs		Outputs
A	B	X
1	1	0
1	0	0
0	1	0
0	0	1

NOR Gate

2. An ideal op-amp and a silicon transistor T are used in the following circuit. Find the output voltage V_{out}

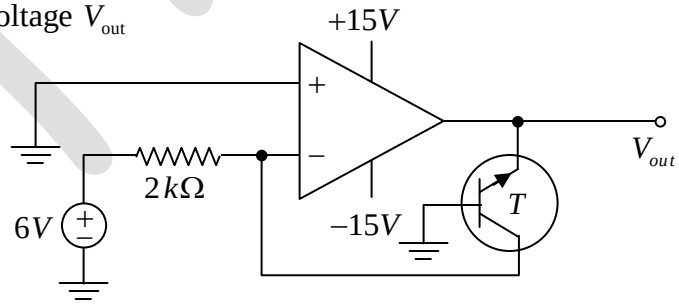

(a) $+5.3\,V$ (b) $-0.7\,V$ (c) $+0.7V$ (d) $-15V$

Ans. 2: (b)

Solution.:

$\because V_{BE} = 0.7\,\text{Volts}$

$V_{out} = V_{EB} = -V_{BE} = -0.7\,\text{Volts}$

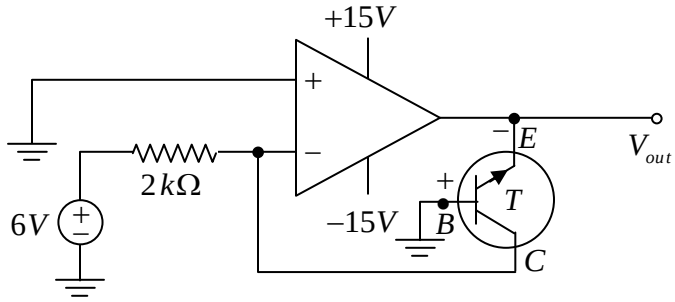

3. In an open circuited p-n junction diode, the barrier voltage at the junction is generated due to

   (a) Minority carriers in the p and n sides

   (b) Majority carriers in the p and n sides

   (c) Immobile negative charge in the p-side and positive charge in the n-side

   (d) Immobile positive charge in the p-side and negative charge in the n-side

Ans. 3: (c)

Solution.:

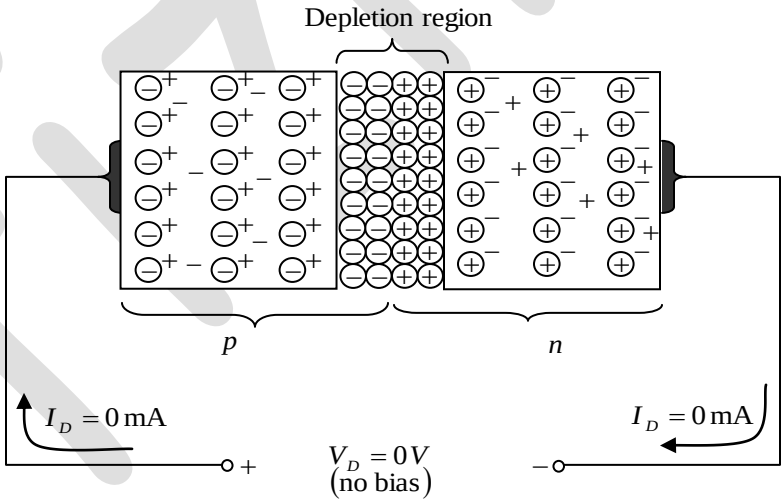

Figure: *p-n* junction with no applied bias.

4. In the figure below with ideal op-amps, the value of $R = 10\,k\Omega$, $V_1 = -10\,mV$, and $V_2 = -30\,mV$. Calculate V_{out}

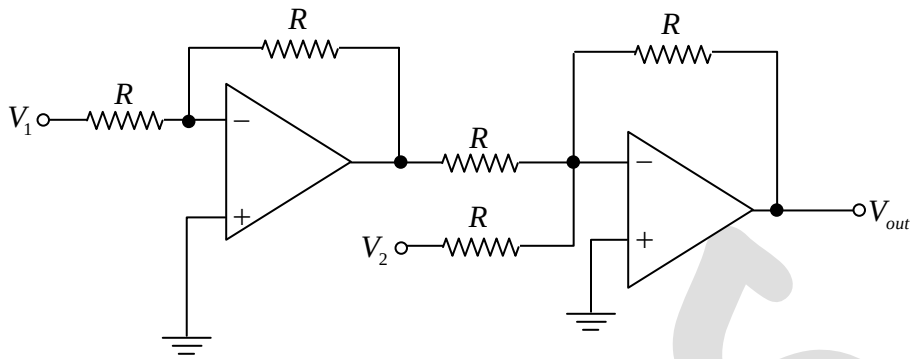

(a) $+40\,mV$ (b) $-40\,mV$ (c) $+20\,mV$ (d) $-20\,mV$

Ans. 4: (c)

Solution.:

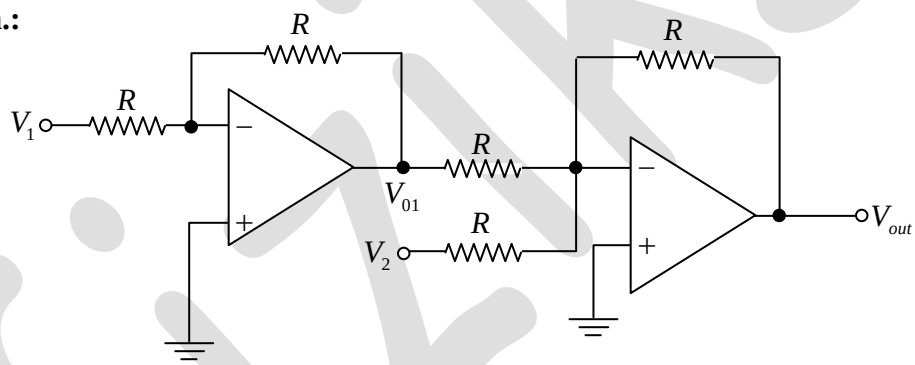

$$V_{01} = -\frac{R}{R}V_1 = -V_1$$

$$V_{out} = V_{01}' + V_2' = -\frac{R}{R}V_{01} - \frac{R}{R}V_2 = -(-V_1) - V_2 = V_1 - V_2$$

$$\Rightarrow V_{out} = V_1 - V_2 = -10\,mV - (-30\,mV) = +20\,mV$$

Part-B: 3-Mark Questions

5. The circuit given in the figure below is composed of ideal diodes and resistances R . The input waveform is shown on the left.

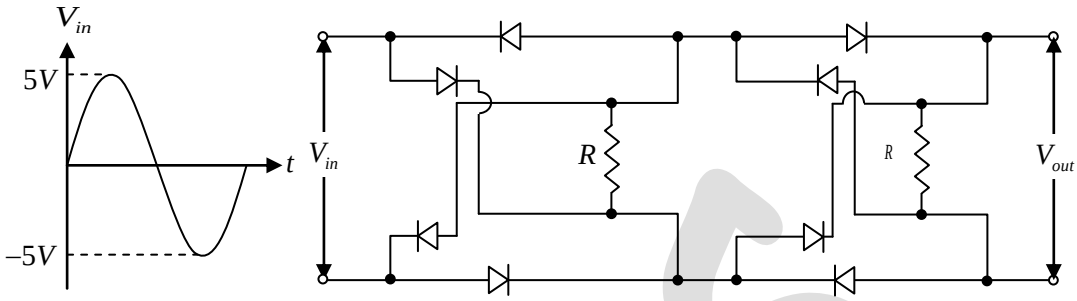

The output waveform would be

(a)
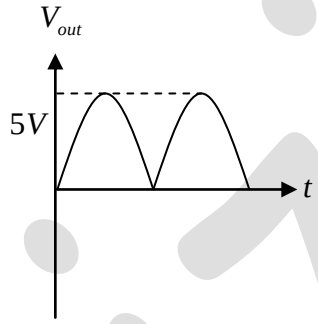

(b)
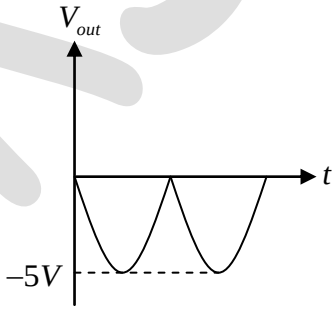

(c)
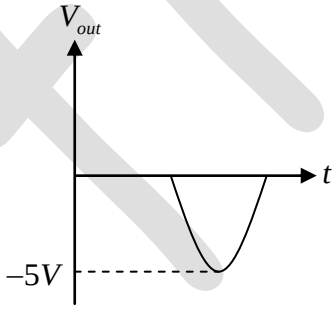

(d)
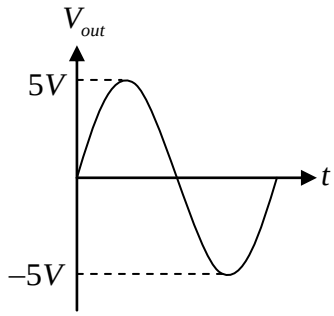

Ans. 5: (a)

Solution.:

Positive half Cycle: Identify which diode is ON and which diode is OFF.

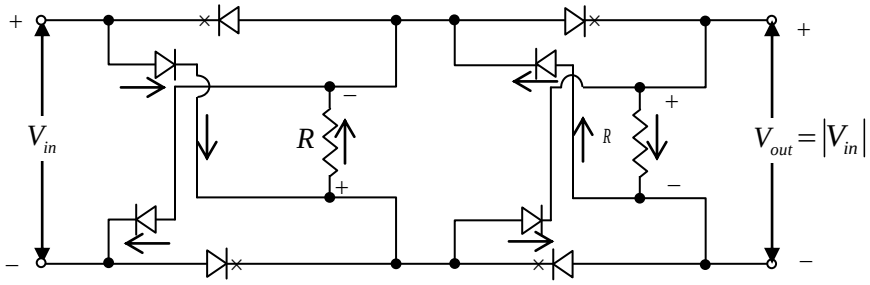

Negative half Cycle: Identify which diode is ON and which diode is OFF.

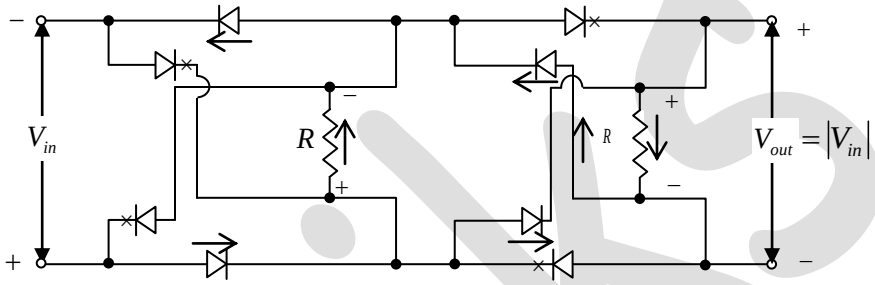

So in both half cycles output will be positive. So option (a) is correct.

Part-C: 2-Mark Numerical Questions

6. In the following transistor circuit $R_1 = 0.5\,k\Omega,\ R_E = R_C = 2k\Omega, R_B = 200\,k\Omega$, $\beta = \dfrac{I_C}{I_B} = 100,\ V_{CC} = 10V, V_{BE} = 0.7V$. Determine the V_{CE} in mV

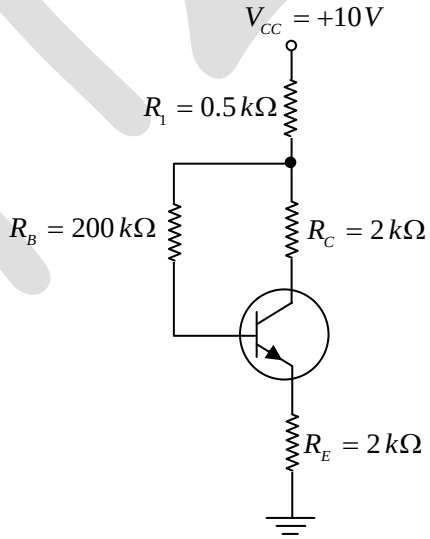

Ans. 6: 950

Solution.:

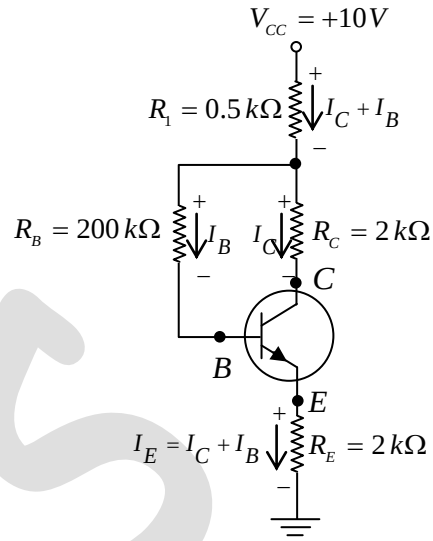

Apply KVL in input section:

$$-10V + 0.5k\left(I_C + I_B\right) + 200k \times I_B + 0.7V + 2k \times I_E = 0$$

$$-10V + 0.5k\left(\beta + 1\right)I_B + 200k \times I_B + 0.7V + 2k \times \left(\beta + 1\right)I_B = 0$$

$$-10V + 0.5k \times 101 I_B + 200k \times I_B + 0.7V + 2k \times 101 I_B = 0$$

$$\Rightarrow I_B = \frac{9.3V}{0.5k \times 101 + 200k + 2k \times 101} = \frac{9.3V}{\left(50.5 + 200 + 202\right)k}$$

$$\Rightarrow I_B = \frac{9.3V}{452.5k} = 0.02mA$$

Apply KVL in output section:

$$-10V + 0.5k\left(\beta + 1\right)I_B + 2k \times \beta I_B + V_{CE} + 2k \times \left(\beta + 1\right)I_B = 0$$

$$\Rightarrow V_{CE} = 10V - \left[0.5k \times 101 + 2k \times 100 + +2k \times 101\right] \times 0.02mA$$

$$\Rightarrow V_{CE} = 10V - \left[50.5 + 200 + +202\right] \times 0.02\ V$$

$$\Rightarrow V_{CE} = 10V - \left(452.5 \times 0.02\right)V = \left(10 - 9.05\right)V = 0.95V = 950mV$$

Part-A: 1-Mark Questions

1. Positronium is a short lived bound state of an electron and a positron. The energy difference between the first excited state and ground state of positronium is expected to be around

   (a) four times that of the Hydrogen atom

   (b) twice that of the Hydrogen atom

   (c) half that of the Hydrogen atom

   (d) the same as that of the Hydrogen atom

Ans. 1: (c)

Solution: Energy of Hydrogen in its nth state is given by

$$E_n = -\frac{13.6}{n^2}\,\text{eV}$$

Energy difference between first excited state and ground state of hydrogen will be

$$\Delta E = E_2 - E_1 = -13.6\text{eV}\left(\frac{1}{4} - 1\right) = \frac{13.6 \times 3}{4}\,\text{eV}$$

Positronium is a bound state of an electron and a positron (mass same as electron but with opposite charge), so reduced mass of positronium is

$$\mu = \frac{m_e \times m_p}{m_e + m_p} = \frac{m_e \times m_e}{m_e + m_e} = \frac{m_e}{2}$$

Energy of positronium in its nth state can be written as

$$E_n{}' = -\frac{13.6\text{eV}}{n^2}\left(\frac{\mu}{m_e}\right) = -\frac{13.6}{2n^2}\,\text{eV}$$

Energy difference between first excited state & ground state of positronium will be

$$\Delta E' = E_2{}' - E_1{}' = -\frac{13.6}{2}\,\text{eV}\left(\frac{1}{4} - 1\right) = \frac{1}{2} \times \left(\frac{13.6 \times 3}{4}\,\text{eV}\right) = \frac{1}{2}\Delta E$$

Part-B: 3-Mark Questions

Part-C: 2-Mark Numerical Questions

fiziks

Part-A: 1-Mark Questions

1. A glass sphere of radius R and refractive index n acts like a lens with focal length

(a) $-\frac{nR}{2(n-1)}$ (b) $+\frac{nR}{2(n-1)}$

(c) $-\frac{nR}{2(n-1)^2}$ (d) $+\frac{nR}{2(n-1)^2}$

Ans. 4: (b)
Solution: For thick lens

$$\frac{1}{f}=(n-1)\left[\frac{1}{R_1}-\frac{1}{R_2}+\frac{(n-1)}{nR_1R_2}\right]$$

$$R_1=+R$$

$$R_2=-R$$

$$t=2R$$

$$\frac{1}{f}=(n-1)\left[\frac{1}{R}-\frac{1}{-R}+\frac{(n-1)2R}{n(+R)(-R)}\right]$$

$$\frac{1}{f}=\frac{2(n-1)}{R}\left[1-\frac{n-1}{n}\right]$$

$$f=\frac{nR}{2(n-1)}$$

2. A flat soap film has a uniform thickness of 510 nm. White light (having wavelengths in the range of about 390 – 700 nm) is incident normally on the film. If the refractive index of the soap is 1.33, what will be the dominant colour of the reflected light?

(a)Violet (b) Green (c) Red (d) White

Ans. 2: (b)

Solution: Condition of maxima in reflected light

$$2\mu t=(2n+1)\frac{\lambda}{2};n=0,1,2,...$$

$$\lambda = \frac{4\mu t}{(2n+1)} = \frac{4\times 1.33\times 510}{(2n+1)} nm$$

$$\lambda = \frac{2713}{(2n+1)} nm$$

On substituting $n = 0,1,2,3,4,..$ we get

$\lambda = 2713nm, 904.3nm, 542.6\,nm, 387.5\,nm, 301.4\,nm$ etc

Out of these values $\lambda = 542.6\,nm$ lies in white light wavelength range $(390-700\,nm)$, so the dominant colour will be corresponding to $\lambda = 542.6\,nm$.

Violet $\rightarrow 390\,nm$

Red $\rightarrow 700\,nm$

So, $\lambda = 542.6\,nm$ will be corresponding to green colour.

3. A monochromatic linearly polarized light with electromagnetic field $\vec{E} = E_0 \sin(\omega t - kz)(\hat{x}+\hat{y})$ is incident normally on a birefringent calcite crystal. The wavelength of the wave is $590\,nm$ and the refractive indices of the crystal along the x- directions and y- directions are 1.66 and 1.49, respectively. If the thickness of the crystal is $434\,nm$, what will be the polarization of the light that emerges from the crystal?

(a) Linearly polarized along the same axis as the incident light

(b) Linearly polarized but along a different axis than the incident light

(c) Circularly polarized

(d) Neither linearly nor circularly polarized but elliptically polarized

Ans. 3: (d)

Solution: Incident light is linearly polarized light, given by

$$E_x = E_0 \sin(\omega t - kz)$$

$$E_y = E_0 \sin(\omega t - kz)$$

Calcite crystal is a negative crystal $(n_E < n_0)$

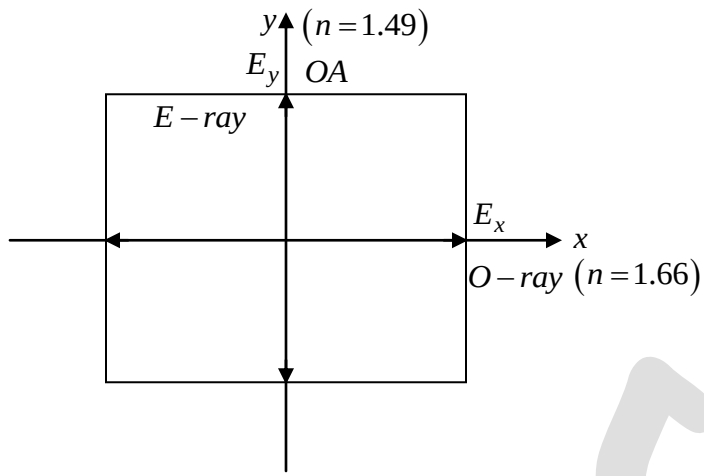

Phase difference introduced between O-ray and E - ray by the crystal

$$\delta = \frac{2\pi}{\lambda}(n_0 - n_E)t = \frac{2\pi}{590}(1.66-1.49)\times 434$$

$$\delta = 0.25\pi = \frac{\pi}{4} \text{ radian}$$

Emergent light will be given by

$$E_x = E_0 \sin \omega t$$

$$E_y = E_0 \sin\left(\omega t + \frac{\pi}{4}\right)$$ which is elliptically polarized light.

Part-B: 3-Mark Questions

4. An ideal polariser is placed in between two crossed polarisers in a coaxial geometry as shown. The middle polariser is rotated at the angular speed of ω about the common axis. If unpolarized light of intensity I_0 is incident on this system, the emergent intensity of the light would be

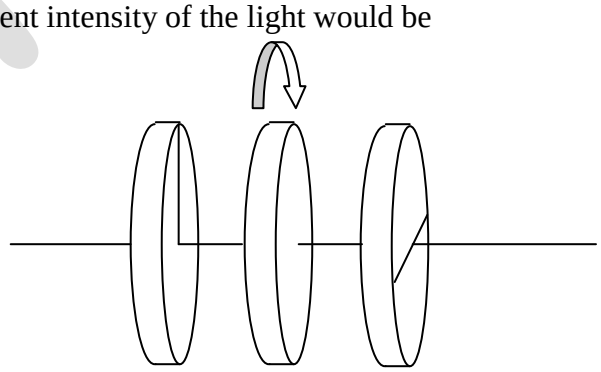

(a) $\frac{l_0}{8}[1-\cos 4\omega t]$

(b) $\frac{l_0}{16}[1-\cos 4\omega t]$

(c) $\frac{l_0}{16}[1-\cos \omega t]$

(d) $\frac{l_0}{16}\left[1-\frac{1}{2}\cos \omega t\right]$

Ans. 4: (b)

Solution: $I_1 = \frac{I_0}{2}$

Let pass axis of middle polarize makes an θ with the pass axis of first polarizer.

$$I_2 = \frac{I_0}{2}\cos^2\theta$$

$$T_3 = \frac{I_0}{2}\cos^2\theta\cos^2\left(\frac{\pi}{2}-\theta\right) = \frac{I_0}{\theta}\sin^2 2\theta$$

$$I_3 = \frac{I_0}{16}(1-\cos 4\theta) = \frac{I_0}{16}(1-\cos 4\omega t)$$

Part-C: 2-Mark Numerical Questions

Part-A: 1-Mark Questions

1. The six faces of a cube are painted violet, blue, red, green, yellow and orange. If the cube is rolled 4 times, what is the probability that the green face appears exactly 3 times?

(a) $\frac{3}{24}$ (b) $\frac{5}{124}$ (c) $\frac{5}{324}$ (d) $\frac{15}{222}$

Ans. 1: (c)

Solution: Let the probability of appearance of green face be $\boldsymbol{p}$ and probability of non-appearance of green face be $\boldsymbol{q}$. Then,

$\boldsymbol{p} = \frac{1}{6}$ and $\boldsymbol{q} = 1 - \frac{1}{6} = \frac{5}{6}$.

This is a case of binomial distribution where n= 4(total number of trials) and r=3(number of successes).

Hence required probability of $\boldsymbol{r}$ (=3) successes (3 green face) out of $\boldsymbol{n}$(=4) trials will be

$$c_r^n(p)^r(q)^{n-r} = c_3^4\left(\frac{1}{6}\right)^3\left(\frac{5}{6}\right)^1 = \frac{4\times1\times5}{6^4} = \frac{5}{324}.$$

Correct choice: (C)

Part-B: 3-Mark Questions

2. A paper has been cut into the shape given in figure (ABCD is a square and the two hexagonal flaps are regular) and placed on the table. The square base lies flat on the table. The hexagonal flaps are then folded upwards along the edges AB and AD such that edges AE and AF of the two hexagons coincide. What is the minimum angle (in degrees) made by the edge AE (or AF) with the surface of the table?

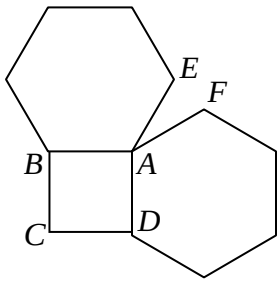

(a) 120 (b) 85 (c) 60 (d) 45

Ans. 2: (d)

Solution: Suppose hexagonal flaps are rotated by an angle θ and side length of hexagon is *a*. Flaps, of course, will meet along the diagonal of the square because of symmetry.

Length of $DE(=DF)$ will remain constant. And the x – and z– coordinates will get changed and y will not after rotation as shown in figure. Length of the diagonal DE = $\sqrt{3}a$

Hence, distance between D and E when evaluated thro co-ordinates will be

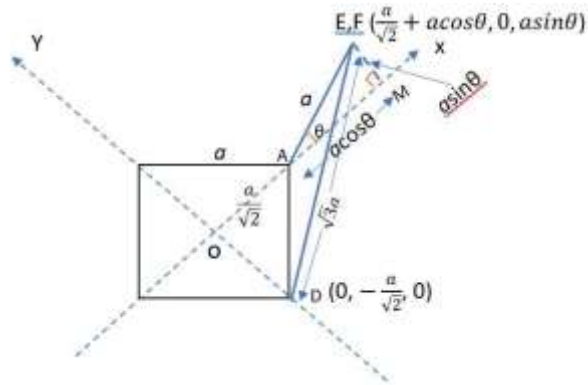

$$= \sqrt{\left(\frac{a}{\sqrt{2}} + a\cos\theta - 0\right)^2 + \left(0 - \left(\frac{a}{\sqrt{2}}\right)\right)^2 + \left(a\sin\theta - 0\right)^2}$$

$$= \sqrt{2a^2 + \sqrt{2}a^2\cos\theta}$$

Which is equal to $\sqrt{3}a$

That is $\sqrt{2a^2 + \sqrt{2}a^2\cos\theta} = \sqrt{3}a$

$\cos\theta = \frac{1}{\sqrt{2}}$; $\theta = 45^o$

Part-C: 2-Mark Numerical Questions

Part-A: 1-Mark Questions

Part-B: 3-Mark Questions

1. An astrophysical observation measured the mass of a star as $(12.41 \pm 1.12) M_{\odot}$, where $M_{\odot}$ is the mass of the Sun. Another independent observation measured the mass of the same star as $(8.40 \pm \Delta) M_{\odot}$. Assuming the errors to have Gaussian distributions, one concluded that the two measurements differed by 3 standard deviations. The value of Δ was approximately

   (a) 0.22 (b) 0.73 (c) 1.04 (d) 1.55

Part-C: 2-Mark Numerical Questions

PHYSICS

Joint Entrance Screening Test (JEST - 2020)

(Booklet Series-D)

PLEASE READ THE INSTRUCTIONS CAREFULLY

1. This paper contains three parts: Part A, Part B and Part C
2. Part A and Part B contains multiple choice questions and only one of the four options in each question is correct. Questions in Part C has integers between 0 and 9999 as answers.
3. Part A contains 25 questions, and each carries 1 (one) mark for the correct answer and –1/3 (negative one third) mark for incorrect answer. Part B contains 15 questions and carry 3 (three) marks each for correct answer and –1 (negative one) mark for incorrect answer. Part C contains 10 questions and each carries 3 (three marks). The answer to these questions must be answered by integers of 4 digits each. Note that if the answer is, e.g. 5, you must fill in 0005. If it is 0, you must fill in 0000. If the zeros are not filled in (where required), the answer will not be credited. There are **NO NEGATIVE MARKS** for these questions.
4. Only non-programmable scientific calculator is allowed and exchange of calculators among the candidates is not permitted. Use of other items like electronic diary, writing pads, pencil box, beeper, cameras, mobile phones, palmtops, laptops, pagers etc. are not permitted inside the examination hall.

PART A: 1 Mark Questions

Q1. The persons named $A, B, C, D, E, F, G, H, I, J$ have come for an interview. They are being called one by one to the interview panel at random. What is the probability that C gives interview before A and A gives before F ?

(a) $\frac{1}{6}$ (b) $\frac{1}{10}$ (c) $\frac{1}{8}$ (d) $\frac{1}{4}$

Ans. : (a)

Solution: $P = \frac{1}{3!} = \frac{1}{6}$

Q2. The ratio of maximum to minimum resistance that can be obtained with N number of $3-\Omega$ resistors is

(a) N (b) N^2 (c) N^3 (d) N^4

Ans. 2: (b)

Solution:

Resistance in series is maximum and minimum in parallel.

$$R_s = 3+3+3+3+.....3N = 3N$$

$$\frac{1}{R_p} = \frac{1}{3}+\frac{1}{3}+\frac{1}{3}..... = \frac{N}{3} \Rightarrow R_p = \frac{1}{N}$$

$$\Rightarrow \frac{R_s}{R_p} = \frac{3N}{3/N} = N^2$$

Q3. Consider three infinitely long, straight and coplanar wires which are placed parallel to each other. The distance between the adjacent wires is d. Each wire carries a current I in the same direction. Consider points on either side of the middle wire where the magnetic field vanishes. What is the distance of these points from the middle wire?

(a) $\frac{2d}{3}$ (b) $\frac{2d}{\sqrt{3}}$ (c) $\frac{d}{3}$ (d) $\frac{d}{\sqrt{3}}$

Ans. 3: (d)

Solution:

Magnetic field due to wire 1 at point P is

$$B_1 = \frac{\mu_0 I}{2\pi(d-r)} \text{ (pointing inward)}$$

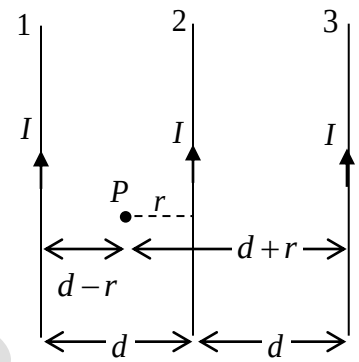

Magnetic field due to wire 2 at point P is

$$B_2 = \frac{\mu_0 I}{2\pi r} \text{ (pointing outward)}$$

Magnetic field due to wire 3 at point P is

$$B_3 = \frac{\mu_0 I}{2\pi(d+r)} \text{(pointing outward)}$$

Magnetic field due to wires at point P will vanish if

$$B_1 = B_2 + B_3 \Rightarrow \frac{\mu_0 I}{2\pi(d-r)} = \frac{\mu_0 I}{2\pi r} + \frac{\mu_0 I}{2\pi(d+r)}$$

$$\Rightarrow \frac{1}{(d-r)} = \frac{1}{r} + \frac{1}{(d+r)} \Rightarrow \frac{1}{d-r} = \frac{d+2r}{r(d+r)} \Rightarrow rd + r^2 = d^2 + 2rd - rd - 2r^2$$

$$\Rightarrow r^2 = d^2 - 2r^2 \Rightarrow 3r^2 = d^2 \Rightarrow r = \frac{d}{\sqrt{3}}$$

Q4. A rod consists of two equal sections of length l each with coefficient of thermal conductivity κ_1 and κ_2, respectively. One end of the rod is kept at a fixed temperature T_1 and the other end at a temperature $T_2\,(T_1 > T_2)$. If $\kappa_2 = 2\kappa_1$ then the temperature at the interface is

(a) $T = \frac{(2T_1 - T_2)}{3}$ (b) $T = \frac{(2T_1 + T_2)}{3}$

(c) $T = \frac{(T_1 + 2T_2)}{3}$ (d) $T = \frac{(T_1 - 2T_2)}{3}$

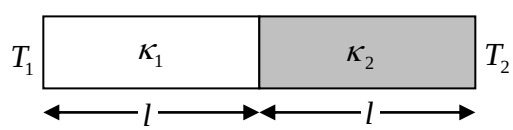

Ans. : (c)

Solution:

Heat In = Heat Out ; $k_1 l(T - T_1)A = k_2 l(T_2 - T)A \quad \Rightarrow T - T_1 = 2(T_2 - T) = 2T_2 - 2T$

$$3T = T_1 + 2T_2 \Rightarrow T = \frac{T_1 + 2T_2}{3}$$

Q5. If $f(t)$ is a real and even function of t, which one of the following statements is true about its Fourier transform $F(\omega)$ (here * indicates complex conjugation)?

(a) $F^*(\omega) = -F(\omega)$ (b) $F^*(\omega) = F(\omega)$

(c) $F(-\omega) = F(\omega)$ (d) $F(-\omega) = F^*(\omega)$

Ans. : (b)

Solution:

Let both form Fourier transformation pairs.

$$f(t) \Leftrightarrow F(\omega)$$

$$F(\omega) = \int_{-\infty}^{\infty} e^{i\omega t} f(t)\,dt = \int_{-\infty}^{\infty} (\cos\omega t + i\sin\omega t) f(t)\,dt = \int_{-\infty}^{\infty} (\cos\omega t) f(t)\,dt,$$

Odd term goes to zero.

$F(\omega) =$ Real and Even $\Rightarrow F^*(\omega) = F(\omega)$

or

Let $f(t) =$ Real and Even

$$F(\omega) = \int_{-\infty}^{\infty} f(t) e^{-i\omega t} dt = \int_{-\infty}^{\infty} f(t)(\cos\omega t + i\sin\omega t) dt = \int_{-\infty}^{\infty} f(t)\cos\omega t dt$$

So $F^*(\omega) = F(\omega)$

Ex: $f(t) = \cos\omega_0 t$

Q6. Consider an ideal gas whose entropy is given by

$$S = \frac{n}{2}\left[\sigma + 5R\ln\frac{U}{n} + 2R\ln\frac{V}{n}\right],$$

where n is the number of moles, σ is a constant, R is the universal gas constant, U is the internal energy and V is the volume of the gas. The specific heat at constant pressure is then given by

(a) $\frac{5}{2}nR$ (b) $\frac{7}{2}nR$ (c) $\frac{3}{2}nR$ (d) nR

Ans. : (b)

Solution:

$$TdS = dU - PdV \Rightarrow dS = \frac{1}{T}dU - \frac{P}{T}dV$$

$$\Rightarrow \left(\frac{\partial S}{\partial U}\right)_V = \frac{1}{T} \Rightarrow \frac{n}{2}\frac{5R}{U} = \frac{1}{T} \quad \Rightarrow U = \frac{5}{2}nRT$$

$$\Rightarrow C_V = \frac{5}{2}nR \quad \text{and} \quad C_P = \frac{7}{2}nR$$

Q7. A 16- bit analog to digital converter works in the range $0-1$ Volt. The least count of the converter is

(a) $0.30\,mV$ (b) $15.26\,mV$ (c) $5.44\,nV$ (d) $15.26\,\mu V$

Ans. 7: (d)

Solution:

$$\text{Least count} = \frac{V_{\max}}{2^n} = \frac{1V}{2^{16}} = \frac{1V}{65536} \approx 15.26\,\mu V$$

Q8. A particle in a spherically symmetric potential is known to be in an eigenstate of $\vec{L}^2$ and L_z with eigenvalues $l(l+1)\hbar^2$ and $m\hbar$, respectively. What is the value of $\langle l,m|L_x^2|l,m\rangle$?

(a) $\frac{\hbar^2}{2}\left(l^2+l+m^2\right)$ (b) $\hbar^2\left(l^2+l-m^2\right)$

(c) $\frac{\hbar^2}{2}\left(l^2+l-m^2\right)$ (d) $\frac{\hbar^2}{2}\left(l^2+l-m^2\right)$

Ans. : (d)

Solution:

$$L_x^2 = \frac{\left(L_+ + L_-\right)^2}{4} = \frac{L_+^2 + L_-^2 + L_+L_- - L_-L_+}{4} = \frac{L_+^2 + L_-^2 + 2\left(L^2 - L_z^2\right)}{4}$$

$$\langle l,m|L_x^2|l,m\rangle = \frac{1}{4}\left[\langle L_+^2\rangle + \langle L_-^2\rangle + 2\langle L^2\rangle - 2\langle L_z^2\rangle\right]$$

$$\Rightarrow \langle l,m|L_x^2|l,m\rangle = \frac{1}{4}\times\left[0+0+2l(l+1)\hbar^2 - 2m^2\hbar^2\right] = \left(l^2+l-m^2\right)\frac{\hbar^2}{2}$$

Q9. A particle of mass m carrying angular momentum l moves in a central potential $V(r) = -\frac{ke^{-ar}}{r}$, where k, a are positive constants. If the particle undergoes circular motion, what is the equation determining its radius r_0?

(a) $\frac{l^2}{mr_0} = kar_0 e^{-ar_0}$

(b) $\frac{l^2}{mr_0} = ke^{-ar_0}(1+ar_0)$

(c) $\frac{l^2}{2mr_0} = ke^{-ar_0}$

(d) $\frac{l^2}{2mr_0} = ke^{-ar_0}(1+ar_0)$

Ans. : (b)

Solution:

$$V_{eff} = \frac{l^2}{2mr^2} - \frac{Ke^{-\alpha r}}{r}$$

For circular motion $\frac{\partial V_{eff}}{\partial r} = 0$ at $r = r_0$

$$\left(\frac{-l^2}{mr^3} + \frac{Ke^{-\alpha r}}{r^2} + \frac{\alpha Ke^{-\alpha r}}{r}\right)\Bigg|_{r=r_0} = 0 \Rightarrow \frac{-l^2}{mr_0^3} + \frac{Ke^{-\alpha r_0}}{r_0^2} + \frac{\alpha Ke^{-\alpha r_0}}{r_0} = 0$$

$$\Rightarrow \frac{l^2}{mr_0^3} = \frac{Ke^{-\alpha r_0}}{r_0^2} + \frac{\alpha Ke^{-\alpha r_0}}{r_0} \Rightarrow \frac{l^2}{mr_0^3} = Ke^{-\alpha r_0}\left[\frac{1}{r_0^2} + \frac{\alpha}{r_0}\right] \Rightarrow \frac{l^2}{mr_0} = Ke^{-\alpha r_0}[1+\alpha r_0]$$

Q10. Calculate the collector current and determine whether or not the transistor in figure shown below is in saturation. Assume $V_{CE}(sat) = 0.2V$

(a) $6.5\,mA$, not in saturation

(b) $11.5\,mA$, in saturation

(c) $11.5\,mA$, not in saturation

(d) $6.5\,mA$, in saturation

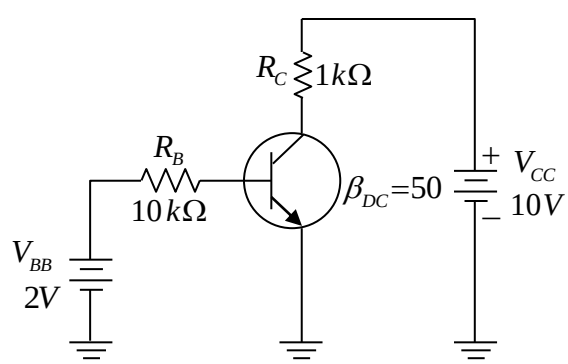

Ans. 10: (a)

Solution:

Emitter base junction is forward bias.

$$I_B = \frac{2V - 0.7V}{10k} = 0.13mA \Rightarrow I_C = \beta I_B = 6.5mA$$

$V_B = V_{BE} = 0.7V$ and $V_C = V_{CC} - I_C R_C = 10V - (6.5\times 1)V = 3.5V$

$\Rightarrow V_{CB} = V_C - V_B = 3.5V - 0.7V = 2.8V = +ve$ (Collector base junction reverse bias)

Thus transistor is in active region.

Q11. Charges are placed as follows: q at $(a,a,0)$ and $(-a,-a,0)$ and $-q$ at $(a,-a,0)$ and $(-a,a,0)$. At large distances, how does the electrostatic potential behave as a function of the distance r from the centre $(0,0,0)$?

(a) $1/r^3$ (b) $1/r^2$ (c) $1/r$ (d) $1/r^4$

Ans. 11: (a)

Solution:

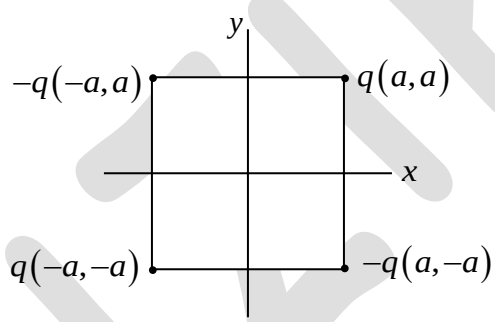

According to multipole expansion $Q_{mono} = q - q + q - q = 0$

$$\vec{p} = q(a\hat{x} + a\hat{y}) - q(-a\hat{x} + a\hat{y}) + q(-a\hat{x} - a\hat{y}) - q(a\hat{x} - a\hat{y}) = 0$$

Thus $V \propto \frac{1}{r^3}$

Q12. An $n\times n$ Hermitian matrix A is not a multiple of the identity matrix. Which one of the following statements is always true?

(a) $nTr(A^2) = (TrA)^2$ (b) $nTr(A^2) < (TrA)^2$

(c) $nTr(A^2) > (TrA)^2$ (d) $Tr(A^2) = n(TrA)^2$

Ans. : (c)

Solution:

Let $n=3$ and $A=\begin{bmatrix}1 & 1 & 1\\ 1 & 1 & 1\\ 1 & 1 & 1\end{bmatrix} \Rightarrow Tr(A)=3$

$$A^2=\begin{bmatrix}3 & 3 & 3\\ 3 & 3 & 3\\ 3 & 3 & 3\end{bmatrix}_{3\times 3} \Rightarrow Tr\left(A^2\right)=9 \quad \Rightarrow nTr\left(A^2\right)=3\times 9=27 \text{ and } (TrA)^2=9$$

Thus $nTr\left(A^2\right)>(TrA)^2$.

Q13. A ring of radius $0.5\,m$ has a gap of $0.002\pi\,m$. If the ring carries a charge of $+1.0\,C$ distributed uniformly along it, then the electric field at the centre of the ring is

(a) $7.5\times 10^7\ NC^{-1}$

(b) $7.2\times 10^7\ NC^{-1}$

(c) $6.2\times 10^7\ NC^{-1}$

(d) $6.5\times 10^7\ NC^{-1}$

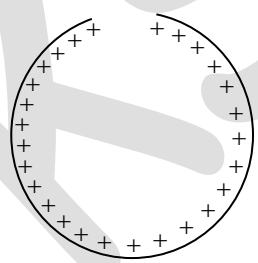

Ans. 13: (b)

Solution:

The electric field at the centre is due to missing segment.

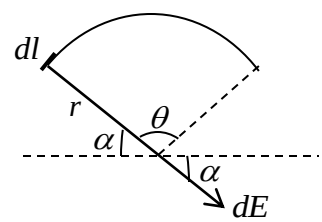

Charge per unit length $\lambda=\dfrac{1C}{2\pi\times\frac{1}{2}-0.002\pi}=\dfrac{1}{0.998\pi}C/m$

$$\because \frac{\text{Arc Length}}{\text{Circumference}}=\frac{\text{Centre Angle}}{360^0} \Rightarrow \frac{l}{2\pi r}=\frac{\theta}{360^0} \Rightarrow \frac{l}{2\pi r}=\frac{\theta}{360^0} \Rightarrow \theta=360^0\times\frac{l}{2\pi r}$$

$$\Rightarrow \theta=360^0\times\frac{0.002\pi}{2\pi\times 0.5}=0.72^0$$

$$\because \alpha+\theta+\alpha=180^0 \Rightarrow \alpha=\frac{180^0-\theta}{2}=\frac{180^0-0.72^0}{2}=89.64^0 \Rightarrow \alpha=89.64^0 \text{ and } \alpha+\theta=90.36^0.$$

Electric field due to elemental length dl at center is $dE=\dfrac{1}{4\pi\varepsilon_0}\dfrac{\lambda dl}{r^2}$.

Consider all elemental length on the arc, then at the centre horizontal component $(dE\cos\alpha)$ will cancel out and the vertical component $(dE\sin\alpha)$ will add up.

Thus resultant field $E=\int dE\sin\alpha=\frac{\lambda}{4\pi\varepsilon_0}\int_{\alpha}^{\alpha+\theta}\sin\alpha\frac{rd\alpha}{r^2}$ $\qquad \because dl=rd\alpha$

$$\Rightarrow E=\frac{\lambda}{4\pi\varepsilon_0 r}\left[-\cos(\alpha+\theta)+\cos\alpha\right]\Rightarrow E=\frac{1}{0.998\pi}\times\frac{9\times10^9}{0.5}\left[-\cos(90.36)+\cos(89.64)\right]$$

$$\Rightarrow E=\frac{1}{0.998\pi}\times\frac{9\times10^9}{0.5}\left[0.0063+0.0063\right]$$

$$\Rightarrow E=\frac{0.1134}{1.566}\times10^9=\frac{11.34}{1.566}\times10^7=7.2\times10^7\ V/m$$

Q14. Consider a system of two particles at temperature $T\to\infty$. Each of them can occupy three different quantum energy levels having energies $0,\in$ and $2\in$, and both of them cannot occupy the same energy level. What is the average energy of the system?

(a) $\in$ (b) $\frac{3\in}{2}$ (c) $2\in$ (d) $4\in$

Ans. : (c)

Solution: $z=e^{-\beta\cdot\in}+e^{-\beta3\in}+e^{-2\in}$

$$\langle\in\rangle=\frac{\in e^{-\beta\cdot\in}}{z}+\frac{3\in e^{-\beta3\in}}{z}+\frac{2\in e^{-\beta2\in}}{z}$$

$$\Rightarrow\langle\in\rangle=\frac{\in}{z}\left[e^{-\beta\cdot\in}+3e^{-\beta3\in}+2e^{-2\beta\in}\right]=\frac{\in\cdot6}{3}=2\in \quad \text{as } T\to\infty,\beta\to0$$

$\in_1$	$\in_2$	$\in_3$	
$\in$	$3\in$	$2\in$	
	A	A	$2\in$
A	A		$\in$
A		A	0

Q15. If x and y have the joint probability distribution $f(x,y)=\frac{3}{4}+xy$ for $0<x,y<1$, and $f(x,y)=0$ otherwise. What is the probability that y assumes a value greater than $\frac{1}{2}$, given that x is equal to $\frac{1}{2}$

(a) $\frac{6}{16}$ (b) $\frac{7}{16}$ (c) $\frac{8}{16}$ (d) $\frac{9}{16}$

Ans. : (d)

Solution:

Since $f(x,y)$ is a probability distribution function.

The Probability in the given range is P = $\int_{1/2}^{1}\left(\frac{3}{4}+xy\right)dy=\frac{3}{8}+\frac{3}{8}x$;

For $x=\frac{1}{2}$, P $=\frac{3}{8}+\frac{3}{8}\times\frac{1}{2}=\frac{9}{16}$

Q16. The wave function of an electron in one dimension is given by

$$\psi(x)=\begin{cases}0, & \text{for } x<0\\ 2\sqrt{3}e^{-x}\left(1-e^{-x}\right), & \text{for } x\geq 0\end{cases}$$

The ratio between the expected position $\langle x\rangle$ and the most probable position x_m is

(a) 0.856 (b) 1.563 (c) 2.784 (d) 3.567

Ans. : (b)

Solution:

$$\psi(x)=2\sqrt{3}e^{-x}\left(1-e^{-x}\right); \qquad x\geq 0$$
$$=0; \qquad x\leq 0$$

$$\left|\psi^2\right|=\left(2\sqrt{3}\left(e^{-x}-e^{-2x}\right)\right)\left(2\sqrt{3}\left(e^{-x}-e^{-2x}\right)\right)=4\times 3\left(e^{-2x}+e^{-4x}-e^{-3x}-e^{-3x}\right)$$

$$\Rightarrow\left|\psi^2\right|=12\left(e^{-4x}+e^{-2x}-2e^{-3x}\right)$$

$$\int_0^\infty|\psi|^2\,dx=-\left[12\left[\frac{-1}{4}-\frac{1}{2}+\frac{2}{3}\right]\right]=-12\left[\frac{-3-6+8}{12}\right]=1$$

For most probable position; $\frac{d|\psi|^2}{dx}=0$

$$\Rightarrow -4e^{-4x}-2e^{-2x}+6e^{-3x}=0\Rightarrow e^{-2x}\left[-4e^{-2x}-2+6e^{-x}\right]=0$$

$$\Rightarrow -4e^{-2x}-2+6e^{-x}=0\Rightarrow 4e^{-2x}-6e^{-x}+2=0 \quad (\text{Let } e^{-x}=y)$$

$$\Rightarrow 4y^2-6y+2=0\Rightarrow 2y^2-3y+1=0\Rightarrow 2y^2-2y-y+2=0$$

$$\Rightarrow 2y(y-1)-1(y-1)=0\Rightarrow(y-1)(2y-1)=0$$

$$\Rightarrow y=1 \text{ and } y=\frac{1}{2}$$

$\Rightarrow e^{-x} = 1$ and $e^{-x} = \frac{1}{2}$

$x_p = 0.693$

$$\langle x \rangle = \int x|\psi|^2 dx = 12\left[\int_0^\infty xe^{-4x}dx + \int_0^\infty xe^{-2x}dx - 2\int_0^\infty xe^{-3x}dx\right]$$

$$\Rightarrow \langle x \rangle = 12\left(\frac{1}{4^2} + \frac{1}{2^2} - \frac{2}{3^2}\right) = 12\left(\frac{1}{16} + \frac{1}{4} - \frac{2}{9}\right) = 12\left(\frac{9+36-32}{144}\right) \quad \Rightarrow \langle x \rangle = \frac{13}{12} = 1.08$$

$$x_p = 0.693$$

$$\frac{\langle x \rangle}{x_p} = \frac{1.08}{0.693} = 1.563$$

Q17. A particle is to slide along the horizontal circular path on the inner surface of the funnel as shown in the figure. The surface of the funnel is frictionless. What must be the speed of the particle (in terms of r and θ) if it is to execute this motion?

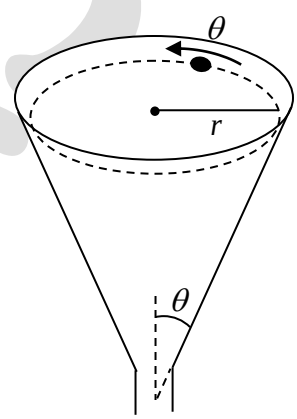

(a) $\sqrt{rg\sin\theta}$

(b) $\sqrt{rg\cos\theta}$

(c) $\sqrt{rg\tan\theta}$

(d) $\sqrt{rg\cot\theta}$

Ans. : (d)

Solution:

$$L = \frac{1}{2}m\left(\dot{r}^2 + r^2\dot{\phi}^2 + \dot{z}^2\right) - mgz$$

$$\frac{r}{z} = \tan\theta \quad \Rightarrow z = r\cot\theta$$

$$L = \frac{1}{2}m\left(\dot{r}^2 + r^2\dot{\phi}^2 + \dot{r}^2\cot^2\theta\right) - mgr\cot\theta = 0$$

For circular motion, $\dot{r} = 0$, $\ddot{r} = 0$

$$mr\dot{\phi}^2 = mg\cot\theta \Rightarrow \dot{\phi} = \sqrt{\frac{g\cot\theta}{r}} \qquad \Rightarrow v = r\dot{\phi} = \sqrt{gr\cot\theta}$$

Q18. Two rails of a railroad track are insulated from each other and from the ground, and are connected by a millivoltmeter. What is the reading of the millivoltmeter when a train travels at the speed $90\,\text{km}/\text{hr}$ down the track? Assume that the vertical component of the earth's magnetic field is 0.2 gauss and that the tracks are separated by two meters. Use $1\text{ gauss} = 10^{-4}\text{ Tesla} = 10^{-4}\,V\cdot\sec/m^2$

(a) 10 (b) 1 (c) 0.2 (d) 180

Ans. 18: (b)

Solution:

Magnetic flux $\phi_m = Blx \Rightarrow$ e.m.f $\varepsilon = -\dfrac{d\phi_m}{dt} = -Blv$

$$\Rightarrow |\varepsilon| = 0.2\times10^{-4}\times 2m\times\frac{90\times10^3}{3600}Volts \Rightarrow |\varepsilon| = 1mV$$

Q19. A particle of mass m moves in a one-dimensional potential $V(x) = F_0|x|$, where F_0 is a positive constant. Given the initial conditions, $x(0) = x_0 > 0$ and $\dot{x}(0) = 0$, which one of the following statements is correct?

(a) The particle undergoes simple harmonic motion about the origin with frequency $\omega = 2\pi\sqrt{\dfrac{F_0}{mx_0}}$

(b) The angular frequency of oscillations of the particle is $\omega = \dfrac{1}{2}\pi\sqrt{\dfrac{F_0}{2mx_0}}$

(c) The particle begins from rest and is accelerated along the positive x-axis such that $x(t) = \dfrac{x_0 + F_0t^2}{2m}$

(d) The angular frequency of oscillations of the particle is independent of its mass

Ans. : (b)

Solution:

$$F = -\frac{\partial V}{\partial x}$$

$$V(x) = F_0x \qquad x>0$$
$$= -F_0x \qquad x<0$$

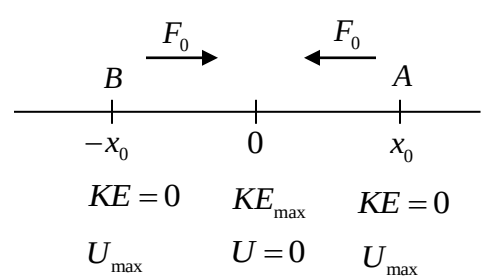

$$F = \begin{cases} -F_0 & x > 0 \\ +F_0 & x < 0 \end{cases}$$

Practice will oscillate about origin but its motion is not SHM because $F \neq -kx$

Time taken by particle from A to 0 is $t_1 = \sqrt{\frac{2x_0}{a}} = \sqrt{\frac{2x_0 m}{F_0}}$

Time period $T = 4t_1 = 4\sqrt{2x_0 m / f_0}$

Frequency $n = \frac{1}{T} = \frac{1}{4}\sqrt{\frac{F_0}{2x_0}} \Rightarrow \omega = 2\pi n = \frac{1}{2}\pi\sqrt{\frac{F_0}{2x_0 m}}$

Q20. A carbon rod of resistance R_c and a metal rod of resistance R_m are connected in series. Let their linear temperature coefficients of resistivity have magnitudes α_c and α_m, respectively. The condition that the net resistance would be independent of temperature is

(a) $R_c = R_m$ (b) $\alpha_c = \alpha_m$ (c) $\frac{R_c}{R_m} = \frac{\alpha_m}{\alpha_c}$ (d) $\frac{R_m}{R_c} = \frac{\alpha_m}{\alpha_c}$

Ans. : (c)

Q21. The $2's$ compliment of 1111 1111 is

(a) 0000 0001 (b) 0000 0000 (c) 1111 1111 (d) 1000 0000

Ans. 21: (a)

Solution:

$(1111\,1111)_2 \rightarrow 1^{st}$ compliment $(0000\ 0000)_2$

2^s compliment $= 1^{st}$ comp.+1=$(0000\ 0001)_2$

Q22. Two tuning forks A and B are struck instantaneously to obtain Lissajous figures. The figures go through a complete cycle in $20\,s$. Fork A is located with wax, so that the cycle period changes to $10\,s$. If the frequency of fork B is $256.10\,Hz$, what is the frequency of fork A after loading?

(a) $256.00\,Hz$ (b) $256.05\,Hz$ (c) $256.15\,Hz$ (d) $256.20\,Hz$

Ans. : (a)

Solution:

$$n_1 \sim n_2 = \frac{1}{t_1}$$

$$n_1 \sim 256.10 = \frac{1}{20} = 0.05$$

So, $n_1 = 256.05$ or 256.15

Since cycle period is decreasing on loading wax, So, $n_1 < n_2$; $n_1 = 256.05$.

Suppose on loading wax n_1 is decreased to $n_1^{\omega ax}$, then

$$n_2 - n_1^{\omega ax} = \frac{1}{t_2} = \frac{1}{10s} = 0.1Hz \quad \Rightarrow n_1^{\omega ax} = n_2 - 0.10 = 256.10 - 0.10$$

$$\Rightarrow n_1^{\omega ax} = 256Hz$$

Q23. Consider a classical harmonic oscillator in thermal equilibrium at a temperature T. If the spring constant is changed to twice its value isothermally, then the amount of work done on the system is

(a) $k_B T \ln 2$ (b) $k_B T \frac{\ln 2}{2}$ (c) $2k_B T \ln 2$ (d) $-k_B T \ln 2$

Ans. : (b)

Solution:

$$Z = \frac{2\pi k_B T}{hw}, \; F = -k_B T \ln Z, \; F = -k_B T \ln \frac{2\pi k_B T}{h\sqrt{\frac{k}{m}}}, F = -k_B T \ln \left(\frac{2\pi k_B T}{h\sqrt{\frac{1}{m}}} k^{-1/2} \right)$$

Using general definition of pressure, $P = -\frac{\partial F}{\partial Parameter} = -\frac{\partial F}{\partial k}$

$$P = k_B T \frac{1}{\frac{2\pi k_B T}{h\sqrt{\frac{1}{m}}} k^{-1/2}} \frac{2\pi k_B T}{h\sqrt{\frac{1}{m}}} \left(-\frac{1}{2} \right) k^{-3/2} = \frac{k_B T}{2k}$$

$$Work = \int_k^{2k} P dk = \int_k^{2k} \frac{k_B T}{2k} dk = \frac{k_B T}{2} \int_k^{2k} \frac{dk}{k} = k_B T \frac{\ln 2}{2}$$

Q24. The solution of the differential equation $y'' - 2y' - 3y = e^u$ is given as $C_1e^{-t} + C_2e^{2t} + C_3e^{3t}$. The values of the coefficients C_1, C_2 and C_3 are:

(a) C_1, C_2 and C_3 are arbitrary

(b) C_1, C_3 are arbitrary and $C_2 = \frac{-1}{3}$

(c) C_2, C_3 are arbitrary and $C_1 = \frac{-1}{3}$

(d) C_1, C_2 are arbitrary and $C_3 = \frac{-1}{3}$

Ans. : (b)

Solution: $\frac{1}{D^2 - 2D - 3}e^{2t} = \frac{1}{4 - 2\times 2 - 3}e^{2t}$

P.I. $= -\frac{1}{3}e^{2t} \quad \Rightarrow C_2 = -\frac{1}{3}$

Q25. A free particle of energy E, characterized by a plane wave of wavelength λ enters a region of constant potential $-V$ (where $E > V > 0$). Within the region of the potential, the wavelength of the particle is $\frac{\lambda}{2}$. The ratio $\frac{V}{E}$ is:

(a) $\frac{-1}{3}$ (b) -3 (c) 3 (d) $\frac{1}{3}$

Ans. : (c)

Solution:

$$E = \frac{P^2}{2m} = \frac{\hbar^2}{2m\lambda^2} \Rightarrow \lambda^2 = \frac{\hbar^2}{2mE}$$

$$\because \frac{\lambda}{2} = \sqrt{\frac{\hbar}{2m(E+V)}} \quad \Rightarrow \left(\frac{\lambda}{2}\right)^2 = \frac{\hbar^2}{2m(E+V)} \Rightarrow \frac{1}{4}\frac{\hbar^2}{2mE} = \frac{\hbar^2}{2m(E+V)}$$

$$\Rightarrow \frac{E+V}{E} = 4 \Rightarrow 1 + \frac{V}{E} = 4 \Rightarrow \frac{V}{E} = 3$$

PART B: 3-Mark Questions

Q1. Consider a quantum particle of mass m moving in a potential

$$V(x,y)=\begin{cases}\frac{1}{2}m\omega^2\left(x^2+y^2\right), & \text{for } x>0, y>0\\ \infty, & \text{otherwise}\end{cases}$$

what is the degeneracy of the energy state $9\hbar\omega$, where $\omega>0$ measures the strength of the potential?

(a) 4 (b) 2 (c) 10 (d) 5

Ans. : (a)

Solution:

$$V(x,y)=\begin{cases}\frac{1}{2}m\omega^2\left(x^2+y^2\right), & \text{for } x>0, y>0\\ \infty, & \text{otherwise}\end{cases}$$

This is semi-parabolic potential in x and y.

So only odd at x_x odd at x_y will give

$(x_x, x_y)=(1,7)(7,1)(3,5)(5,3)$.

So option (a) is correct.

Q2. Consider a particle with total energy E is oscillating in a potential $U(x)=A|x|^n$ with $A>0$ and $n>0$ in one dimension. Which one of the following gives the relation between the time-period of oscillation T and the total energy E:

(a) $T\propto E^{1/n-1/2}$ (b) $T\propto E^0$ (c) $T\propto E^n$ (d) $T\propto E^{1/n}$

Ans. : (a)

Solution:

$$J=\oint\sqrt{2m(E-V)}dx \Rightarrow J\propto \int_0^{(E/A)^{1/n}}\sqrt{2m\left(E-\hbar x^n\right)}dx$$

$$J\propto\sqrt{2mE}\times\left(\frac{E}{A}\right)^{1/n}\int_0^1\sqrt{1-t^n}dt \Rightarrow J\propto E^{\frac{1}{n}+\frac{1}{2}}$$

$$T\propto\frac{\partial J}{\partial E}\Rightarrow T\propto E^{\frac{1}{n}-\frac{1}{2}}$$

Q3. A classical gas of N particles is kept at a temperature T and is confined to move on a two-dimensional surface (xy-plane). If an external linear force field is applied along the x-axis, then the partition function of the system will be proportional to

(a) T^N (b) T^{2N} (c) $T^{N/2}$ (d) $T^{3N/2}$

Ans. : (d)

Solution:

$$F = -kx = -\frac{dV}{dx} \Rightarrow V = +kx^2$$

$$z_1 = \frac{1}{h^2}\iint \iint_{-\infty}^{\infty} e^{-\beta\left[\frac{p_x^2}{2m}+\frac{p_y^2}{2m}+kx^2\right]} dp_x dp_y dx dy \propto \left(\sqrt{2\pi x k_B T}\right)^2 \sqrt{\frac{\pi}{\beta k}} \Rightarrow z_1 \propto T^{\frac{1}{2}+1} \propto T^{\frac{3}{2}}$$

Thus for N particles $z_1 \propto T^{\frac{3}{2}N}$

Q4. An electromagnetic field is given by

$$\vec{E}(\vec{r},t) = -\frac{1}{4\pi \in_0}\frac{q}{r^2}\theta(vt-r)\dot{r}, \qquad \vec{B}(\vec{r},t) = 0$$

$$\text{where } \theta(x) = \begin{cases} 1 & \text{for } x > 0 \\ 0 & \text{for } x \le 0 \end{cases}$$

The corresponding charge density ρ and current density $\vec{J}$ are given by

(a) $\rho = -q\delta^3(\vec{r})\theta(vt-r) + \frac{q}{4\pi r^2}\theta(vt-r); \vec{J} = 0$

(b) $\rho = -q\delta^3(\vec{r})\theta(vt-r); \vec{J} = 0$

(c) $\rho = \frac{q}{4\pi r^2}\delta(vt-r); \vec{J} = \frac{qv}{4\pi r^2}\delta(vt-r)\hat{r}$

(d) $\rho = -q\delta^3(\vec{r})\theta(vt-r) + \frac{q}{4\pi r^2}\delta(vt-r); \vec{J} = \frac{qv}{4\pi r^2}\delta(vt-r)\hat{r}$

Ans. 4: (d)

Solution:

$$\because \vec{\nabla}.\vec{E} = \frac{\rho}{\varepsilon_0} \Rightarrow \rho = \varepsilon_0\left(\vec{\nabla}.\vec{E}\right) \Rightarrow \rho = -\frac{q}{4\pi}\vec{\nabla}.\left\{\theta(vt-r)\frac{\hat{r}}{r^2}\right\}$$

$$\Rightarrow \rho = -\frac{q}{4\pi}\left[\theta(vt-r)\vec{\nabla}.\left(\frac{\hat{r}}{r^2}\right) + \frac{\hat{r}}{r^2}.\vec{\nabla}\left\{\theta(vt-r)\right\}\right]$$

$$\Rightarrow \rho = -q\delta^3(r)\theta(vt-r) + \frac{q}{4\pi r^2}\delta(vt-r) \qquad \because \vec{\nabla}.\left(\frac{\hat{r}}{r^2}\right) = 4\pi\delta^3(r) \text{ and } \theta(x) = \begin{cases} 1 & \text{for } x > 0 \\ 0 & \text{for } x \le 0 \end{cases}$$

$$\because \vec{\nabla}\times\vec{B} = \mu_0\vec{J} + \mu_0\varepsilon_0\frac{\partial\vec{E}}{\partial t} \Rightarrow \vec{J} = -\varepsilon_0\frac{\partial\vec{E}}{\partial t} \qquad \because \vec{B} = 0$$

$$\Rightarrow \vec{J} = -\varepsilon_0\frac{\partial\vec{E}}{\partial t} = -\varepsilon_0 \times \frac{q}{4\pi\varepsilon_0 r^2}\frac{\partial\theta}{\partial t} \times v\hat{r} \Rightarrow \vec{J} = \frac{qv}{4\pi r^2}\delta(vt-r)\hat{r}$$

Q5. A particle of mass m is placed in a potential well $U(x) = cx^n$, where c is a positive constant and n is an even positive integer. If the particle is in equilibrium at constant temperature, which one of the following relations between average kinetic energy $\langle K\rangle$ and average potential energy $\langle U\rangle$ is correct?

(a) $\langle K\rangle = \frac{2}{n}\langle U\rangle$ (b) $\langle K\rangle = \langle U\rangle$ (c) $\langle K\rangle = \frac{n}{2}\langle U\rangle$ (d) $\langle K\rangle = 2\langle U\rangle$

Ans. : (c)

Solution:

If $V = ar^{n+1}$ then $\langle T\rangle = \frac{n+1}{2}\langle V\rangle$.

Thus if $U(x) = cx^n \quad \Rightarrow \langle K\rangle = \frac{n}{2}\langle U\rangle$.

Q6. What is the charge stored on each capacitor C_1 and C_2 in the circuit shown in the given figure?

(a) $6\mu C, 6\mu C$

(b) $6\mu C, 3\mu C$

(c) $3\mu C, 6\mu C$

(d) $3\mu C, 3\mu C$

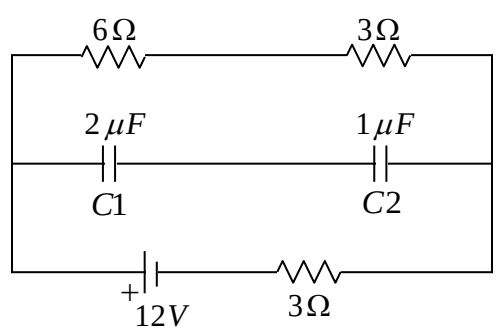

Ans. 6: (a)

Solution:

$V_1 = \frac{q_1}{C_1}$, $V_2 = \frac{q_2}{C_2}$ and $V_1 + V_2 = 9V$.

$\Rightarrow \frac{q_1}{C_1} + \frac{q_2}{C_2} = 9V \Rightarrow \frac{q_1}{2\mu F} + \frac{q_2}{1\mu F} = 9V$

$\Rightarrow q_1 + 2q_2 = 18$ (Check that option (a) satisfies this condition)

Q7. A particle moving in two dimensions satisfies the equations of motion

$$\dot{x}(t) = x(t) + y(t)$$

$$\dot{y}(t) = x(t) - y(t)$$

with $\dot{x}(0) = 0$. What is the ratio of $\frac{x(\infty)}{y(\infty)}$?

(a) $1 - \frac{1}{\sqrt{2}}$ (b) $1 + \frac{1}{\sqrt{2}}$ (c) $\sqrt{2} - 1$ (d) $\sqrt{2} + 1$

Ans. : (d)

Solution:

$\ddot{x} = \dot{x} + \dot{y} \Rightarrow \ddot{x} = \dot{x} + x - (\dot{x} - x) \Rightarrow \ddot{x} = \dot{x} + x - \dot{x} + x$

$\Rightarrow \ddot{x} - 2x = 0 \Rightarrow m^2 - 2 = 0 \Rightarrow m = \pm\sqrt{2}$

$\Rightarrow x = C_1 e^{\sqrt{2}t} + C_2 e^{-\sqrt{2}t}$

$\dot{x} = (t) = C_1\sqrt{2}e^{\sqrt{2}t} - C_2\sqrt{2}e^{-\sqrt{2}t}$

$\because \quad \dot{x}(0) = 0 \Rightarrow C_1 - C_2 = 0 \Rightarrow C_2 = C_1$

$\Rightarrow x = 2C_1 \sinh\sqrt{2}t$

and $y = \dot{x} - x = \sqrt{2}C_1 \cosh\sqrt{2}t - 2C_1 \sinh\sqrt{2}t$

$$\frac{x}{y} = \frac{2C_1 \sinh\sqrt{2}t}{\sqrt{2}C_1 \cosh\sqrt{2}t - 2C_1 \sinh\sqrt{2}t} \quad \Rightarrow \frac{x}{y} = \frac{1}{\sqrt{2}\coth\sqrt{2}t - 1} = \frac{1}{\sqrt{2} - 1} = \sqrt{2} + 1, \quad at\, t \to \infty$$

Q8. Analyse the common emitter transistor circuit given in the figure. If the current gain (β) increases by 50%, the relative change in collector current (I_C) is approximately

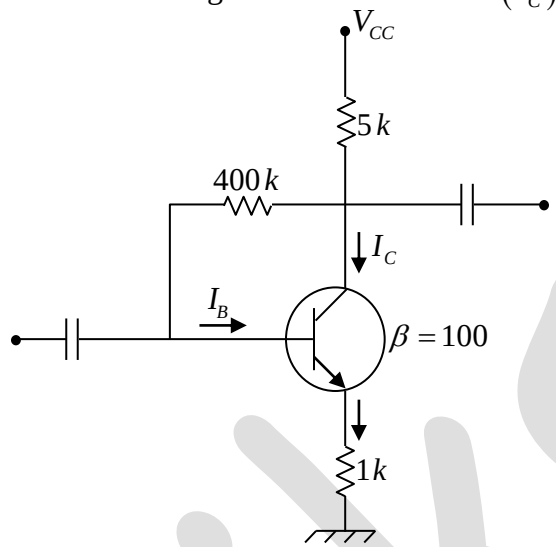

(a) 5% (b) 15% (c) 20% (d) 25%

Ans. 8: (b)

Solution: $I_C = \dfrac{V_{CC} - V_{BE}}{5k + 1k + \dfrac{400k}{100}} = \dfrac{V_{CC} - V_{BE}}{10k}$ and $I'_C = \dfrac{V_{CC} - V_{BE}}{5k + 1k + \dfrac{400k}{150}} = \dfrac{V_{CC} - V_{BE}}{8.66k}$.

Thus $\dfrac{I_C - I'_C}{I_C} \times 100\% \approx 15\%$.

Q9. What is the value of the following contour integral I taken counterclockwise around the circle $|z| = 2$?

$$I = \oint_C \frac{dz}{z^3(z+4)}$$

(a) $\dfrac{\pi i}{2}$ (b) $\dfrac{\pi i}{32}$ (c) $\dfrac{\pi i}{16}$ (d) $\dfrac{\pi i}{4}$

Ans. : (b)

Solution: $f(z) = \dfrac{1}{4z^3}\left[1 + \dfrac{z}{4}\right]^{-1} = \dfrac{1}{4z^3}\left[1 - \dfrac{z}{4} + \dfrac{(-1)(-2)}{2!}\dfrac{z^2}{16} + \ldots\right]$

$\Rightarrow b_1 = \dfrac{1}{64}, \quad I = 2\pi i \times \dfrac{1}{64} = \dfrac{\pi i}{32}$

Q10. Consider a cube (see figure) of volume V containing N molecules each of mass m with uniform density $n = \frac{N}{V}$. Suppose this system is equivalent to a system of M non-interacting gases such that molecules of the ith gas are $N_i = n_i V$ in number, each with an identical y-component of velocity v_i. What is the pressure P on the surface $ABCD$ of area A?

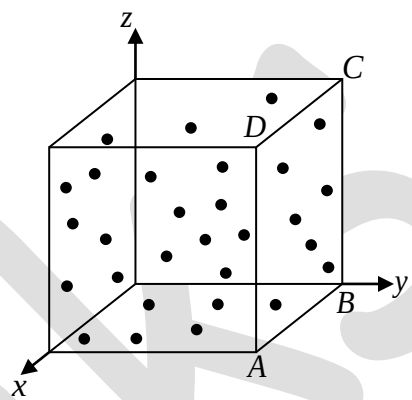

(a) $P = m\sum_{i=1}^{M} n_i v_i^2$

(b) $P = \frac{m\sum_{i=1}^{M} n_i v_i^2}{\sum_{i=1}^{M} n_i}$

(c) $P = \frac{m\sum_{i=1}^{M} n_i v_i^2}{2}$

(d) $P = 2m\sum_{i=1}^{M} n_i v_i^2$

Ans. : (a)

Solution:

We will use kinetic theory of Gas model. Let the momentum of the ith molecule before collision with the walls be $p = mv_i$ After the collision with the walls it will return in opposite direction. If the collision is elastic the momentum will be $p = -mv_i$

$\therefore$ Change in momentum after collision $\Delta p = mv_i - (-mv_i) = 2mv_i$

$\therefore$ Force applied by the wall on a molecule will be, $F_i = \frac{\Delta p}{\Delta t} = \frac{2mv_i}{l/v_i} = \frac{2mv_i^2}{l}$

$\Rightarrow$ Total force acting on the wall is the sum of all the forces applied by all the molecules is given by $F = \sum_{i=1}^{M} F_i N_i$

$\therefore$ Pressure acting on the wall will be,

$$P = \frac{F}{A} = \frac{\sum_{i=1}^{M} F_i N_i}{l^2} = \frac{\sum_{i=1}^{M} 2mv_i^2 N_i}{l^3} = \frac{1}{l^3}\sum_{i=1}^{M} 2mv_i^2 N_i = \frac{2m}{l^3}\sum_{i=1}^{M} v_i^2 n_i V = 2m\sum_{i=1}^{M} n_i v_i^2$$

Q11. The wave function of a particle subjected to a spherically symmetric potential $V(r)$ is given by $\psi(\vec{r}) = (x - y + 2z) f(r)$. Which one of the following statements is true about $\psi(\vec{r})$?

(a) It is an eigenfunction of $\vec{L}^2$ with $l = 0$

(b) It is an eigenfunction of $\vec{L}^2$ with $l = 1$

(c) It is an eigenfunction of $\vec{L}^2$ with $l = 2$

(d) It is not an eigenfunction of $\vec{L}^2$

Ans. : (b)

Solution:

$$\psi(r) = (x - y + 2z) f(r)$$

$$x = r\sin\theta\cos\phi,\ y = \sin\theta\sin\phi,\ z = r\cos\theta$$

$$\psi(r,\theta,\phi) = rf(r)\left[\sin\theta(\cos\phi - \sin\phi) + 2\cos\theta\right] \propto rf(r)P_1(\cos\theta) f(\phi) \quad \Rightarrow l = 1$$

Eigen state with $l = 1$

Q12. The Hamiltonian for a particle of mass m is given by $H = \frac{(p - \alpha q)^2}{(2m)}$, where α is a non-zero constant. Which one of the following equations is correct?

(a) $p = m\dot{q}$

(b) $\alpha\dot{p} = \dot{q}$

(c) $\ddot{q} = 0$

(d) $L = \frac{1}{2}m\dot{q}^2 - \alpha q\dot{q}$

Ans. : (c)

Solution: $H = \frac{(p - \alpha q)^2}{2m}$

$$\frac{\partial H}{\partial p} = \dot{q} \Rightarrow \frac{p - \alpha q}{m} = \dot{q} \Rightarrow (p - \alpha q) = m\dot{q}$$

$$\frac{\partial H}{\partial q} = -\dot{p} \quad \Rightarrow \frac{-2\alpha(p - \alpha q)}{2m} = -\dot{p} \ \Rightarrow \dot{p} = \frac{\alpha(p - \alpha q)}{m} \Rightarrow \dot{p} = \frac{\alpha \times m\dot{q}}{m} = \alpha\dot{q}$$

$$\because (p - \alpha q) = m\dot{q} \Rightarrow p = \alpha q + m\dot{q} \Rightarrow \dot{p} = \alpha\dot{q} + m\ddot{q}$$

Thus $\dot{p} = \alpha\dot{q} + m\ddot{q} = \alpha\dot{q} \quad \Rightarrow m\ddot{q} = 0 \qquad \Rightarrow \ddot{q} = 0$

Q13. A continuous $He-Ne$ laser beam $(\lambda = 632.8\,nm)$ is 'chopped', using a spinning aperture into $1\mu s$ square pulses. The order-of-magnitude estimate of the spectral width $\Delta\lambda$ of the emerging 'pulsed' light is

(a) $10^{-9}\,m$ (b) $10^{-12}\,m$ (c) $10^{-15}\,m$ (d) $10^{-18}\,m$

Ans. : (c)

Solution: $\Delta\nu \sim \frac{1}{\tau} \quad \Rightarrow \frac{c}{\lambda^2}\Delta\lambda \sim \frac{1}{\tau}$

$$\Delta\lambda \sim \frac{\lambda^2}{c\tau} = \frac{\left(632.8\times10^{-9}\right)^2}{\left(3\times10^{8}\right)\left(1\times10^{-6}\right)} = 1.33\times10^{-15}\,m$$

Q14. The Hamiltonian of a classical particle is given by $H(p,q) = \frac{p^2}{2m} + \frac{kq^2}{2}$. Given $F(p,q,t) = \ln(p + im\omega q) - i\alpha\omega t$ is a constant of motion (where $\omega = \sqrt{\frac{k}{m}}$). What is the value of α?

(a) 2π (b) 0 (c) 1 (d) π

Ans. : (c)

Solution:

$$H = \frac{p^2}{2m} + \frac{1}{2}m\omega^2 q^2$$

$$F = \ln(p + im\omega q) - i\alpha\omega t$$

$$\frac{dF}{dt} = (F,H) + \frac{\partial F}{\partial t} = 0 \quad \Rightarrow \frac{\partial F}{\partial q}\cdot\frac{\partial H}{\partial p} - \frac{\partial F}{\partial p}\cdot\frac{\partial H}{\partial q} + \frac{\partial F}{\partial t} = 0$$

$$\Rightarrow \frac{im\omega}{(p + im\omega q)}\cdot\frac{p}{m} - \frac{m\omega^2 q}{(p + im\omega q)} - i\alpha\omega = 0$$

$$\Rightarrow \frac{\left(i\omega p - m\omega^2 q\right)}{(p + im\omega q)} - i\alpha\omega = 0 \Rightarrow \frac{i\omega(p + i\omega mq)}{(p + i\omega mq)} - i\alpha\omega = 0$$

$$\Rightarrow i\omega - i\alpha\omega = 0 \quad \Rightarrow \alpha = 1$$

Q15. Three polarizers are stacked, normal to a central axis, along which is incident a beam of unpolarized light of intensity I_0. The first and the third polarizers are perpendicular to each other and the middle polarizer is rotated at an angular frequency ω about the central axis (light beam). The time dependent intensity of light emerging after the third polarizer will be given by

(a) $I(t)=\left(\frac{I_0}{16}\right)\{1-\cos(4\omega t)\}$

(b) $I(t)=\left(\frac{I_0}{8}\right)\{1-\cos(2\omega t)\}$

(c) $I(t)=\left(\frac{I_0}{4}\right)\{1-2\cos\omega t\}$

(d) $I(t)=\left(\frac{I_0}{2}\right)\cos^2\omega t$

Ans. 3: (a)

Solution:

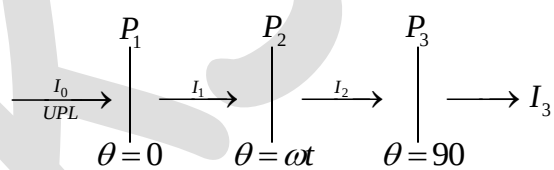

$$I_1 = I_0/2$$

$$I_2 = I_1\cos^2\theta = \frac{I_0}{2}\cos^2\theta$$

$$I_3 = I_2\cos^2\left(90^0-\theta\right) = \frac{I_0}{2}\cos^2\theta\sin^2\theta = \frac{I_0}{8}\sin^2 2\theta$$

$$I_3 = \frac{I_0}{16}(1-\cos 4\theta) = \frac{I_0}{16}(1-\cos 4\omega t)$$

PART C: 3- Mark Numerical Questions

Q1. A thin film of water having refractive index $n = 1.333$ floats on the surface of a beaker of silicone oil having refractive index $n_s = 1.40$. The arrangement is illuminated by $600\,nm$ light incident normally from top and a large region of the film appears bright red. What is the minimum possible thickness of the film (in nm)?

Ans. : 0225

Solution: $2\mu_f t\cos r = n\lambda$

$r = 0^0$, $n = 1$ for minimum thickness

$$t_{\min} = \frac{\lambda}{2\mu_f} = \frac{600nm}{2\times 1.333} = 225nm$$

Q2. What is the value of the following integral?

$$I = \frac{100\sqrt{2}}{\pi}\int_0^{\pi/2} x\delta\left(2\sin x - \sqrt{2}\right)dx$$

Ans. : 0025

Solution:

For the location of the delta function set $2\sin x - \sqrt{2} = 0 \Rightarrow \sin x = \frac{\sqrt{2}}{2} = \frac{1}{\sqrt{2}} \Rightarrow x = \frac{\pi}{4}$

only this pole exists between 0 to pi/2. Others will not be considered.

$$\Rightarrow \delta\left(2\sin x - \sqrt{2}\right) = \delta\left(x - \frac{\pi}{4}\right) = \begin{cases} \infty & x = \frac{\pi}{4} \\ 0 & x \neq \frac{\pi}{4} \end{cases}$$

The general formula to calculate is given by: $\delta\left[g(x)\right]dx = \frac{1}{g'(x_0)}\delta(x - x_0)$

$$I = \frac{100\sqrt{2}}{\pi}\int_0^{\pi/2} x\frac{1}{2\cos\frac{\pi}{4}}\delta\left(x - \frac{\pi}{4}\right)dx = \frac{100\sqrt{2}}{\pi}\frac{1}{2\cos\frac{\pi}{4}}\int_0^{\pi/2} x\delta\left(x - \frac{\pi}{4}\right)dx$$

$$\Rightarrow I = \frac{100}{\pi}\int_0^{\pi/2} x\,\delta\left(x - \frac{\pi}{4}\right)dx = \frac{100}{\pi}\times\frac{\pi}{4} = 25$$

Q3. Two compartments in a cylinder with uniform cross section and total length $102\,cm$ are separated by a sliding partition which can move but does not allow heat to pass across it. No molecules are present in either of the compartments. The radiation inside each compartment is in thermal equilibrium with its walls. The walls at the two ends of the cylinder are maintained at temperatures $2000\,K$ and $4000\,K$, respectively. The sides are perfectly insulated. Find the location of the partition, measured from the left end of the container.

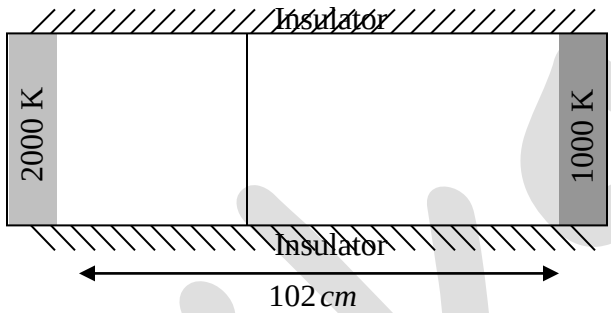

Ans. 3: 0006

Solution:

Balancing Radiation Pressure on both side of the wall, $\frac{P_1}{x} = \frac{P_2}{102-x}$

$$\Rightarrow \frac{(2000)^4}{x} = \frac{(4000)^4}{102-x} = \frac{(2)^4}{x} = \frac{(4)^4}{102-x} = \frac{1}{x} = \frac{16}{102-x} \Rightarrow x = 6\,cm$$

Q4. A laser has output power of $150\,mW$ with beam diameter of $2\,mm$ at a wavelength $630\,nm$. What is the value of the electric field in units of V/m is? Use Coulomb's constant, $\frac{1}{(4\pi \in_0)} = 9\times10^9\,Nm^2C^{-2}$

Ans. 4: 6000

Solution:

$$I = \frac{P}{A} = \frac{1}{2}\varepsilon_0 E_0^2 c = \frac{P}{\pi r^2} \Rightarrow E_0^2 = \frac{2P}{\pi\varepsilon_0 c r^2} \Rightarrow E_0 = \sqrt{\frac{2P}{\pi\varepsilon_0 c r^2}} = \sqrt{\frac{1}{4\pi\varepsilon_0}\frac{8P}{cr^2}}$$

$$\Rightarrow E_0 = \sqrt{9\times10^9 \times \frac{8\times150\times10^{-3}}{3\times10^8\times\left(10^{-3}\right)^2}} \Rightarrow E_0 = \sqrt{\frac{1200\times3\times10^6}{10^2}} = 6000\ V/m$$

Q5. A two-state quantum system has energy eigenvalues $\pm\in$ corresponding to normalised states ψ_+. At time $t=0$ the system is in the quantum state $\frac{[\psi_+ + \psi_-]}{\sqrt{2}}$. Find the $10000\times$ probability that the system will be in the same state at time $t=\frac{h}{(6\in)}$, where h is the Planck's constant.

Ans. : 2500

Solution: $t=0$

$$|\psi\rangle = \frac{1}{\sqrt{2}}(\psi_+ + \psi_-)$$

$$|\psi(t)\rangle = \frac{1}{\sqrt{2}}\left[\psi_+ e^{-\frac{i\in t}{\hbar}} + \psi_- e^{\frac{i\in t}{\hbar}}\right]$$

$$t = \frac{h}{6\in}$$

$$|\psi(t)\rangle = \frac{1}{\sqrt{2}}\left[\psi_+ e^{-\frac{i2\pi\in}{h}\frac{h}{6\in}} + \psi_- e^{\frac{i2\pi\in}{h}\frac{h}{6\in}}\right] = \frac{1}{\sqrt{2}}\left[\psi_+ e^{-\frac{\pi i}{3}} + \psi_- e^{\frac{\pi i}{3}}\right]$$

$$\left|\langle\psi|\psi(t)\rangle\right|^2 = \frac{1}{4}\left|\frac{\left(e^{-\frac{\pi i}{3}} + e^{\frac{\pi i}{3}}\right)}{2}\right|^2 = \frac{\left|2\cos\frac{\pi}{3}\right|^2}{4} = \frac{1}{4}$$

$$\frac{1}{4}\times 10000 = 2500$$

Q6. A small insect of mass m is sitting on the rim of a uniform circular horizontal disk of radius R and mass M. The system is rotating at a constant angular velocity ω_i about a frictionless vertical axis passing through the center of the disk. The insect started to crawl towards the center of the disk. Assume $\frac{M}{m}=10$, and let the final angular velocity of the system, when the insect reaches the centre of the disk be ω_f. What is the value of $\frac{100\omega_f}{\omega_i}$?

Ans. : 0120

Solution:

$F_\theta = 0$, so angular momentum is constant.

$I_{in} = I_f$

$$\left(\frac{MR^2}{2} + mR^2\right)\omega_i = \left(\frac{MR^2}{2}\right)\omega_f$$

$$\frac{\omega_f}{\omega_i} = \frac{\frac{MR^2}{2} + mR^2}{\frac{MR^2}{2}} = 1 + \left(\frac{m}{\frac{M}{2}}\right) \quad \frac{\omega_f}{\omega_i} = \left(1 + \frac{2}{10}\right) = \frac{12}{10}$$

$$\left(\frac{\omega_f}{\omega_i}\right) \times 100 = \frac{12}{10} \times 100 = 120$$

Q7. A particle is moving on a one-dimensional discrete lattice with lattice spacing unity. It can move from a site to its nearest neighbour site every $1/5$ seconds with p being the probability to move right and $q = (1-p)$ being the probability to move left. Consider that the particle starts at origin, $x = 0$ at time $t = 0$. Taking $p = \frac{3}{4}$, calculate the variance $\left\langle \left(x - \langle x \rangle\right)^2 \right\rangle$ at time $t = 5 \times 10^4$ seconds, where $\langle x \rangle$ is the average position.

Ans. : 46875

Solution:

Step length $l = 1$, Number of steps $N = \frac{5 \times 10^4}{1/5} = 250000$

$$\sigma^2 = \left\langle \left(x - \langle x \rangle\right)^2 \right\rangle = Npq = 250000 \times \frac{3}{4} \times \frac{1}{4} = 46875$$

Q8. Analyse the op-amp circuit shown in the figure below. What is the output voltage (V_0) in millivolts if $V_1 = 2.5V$ and $V_2 = 2.25V$?

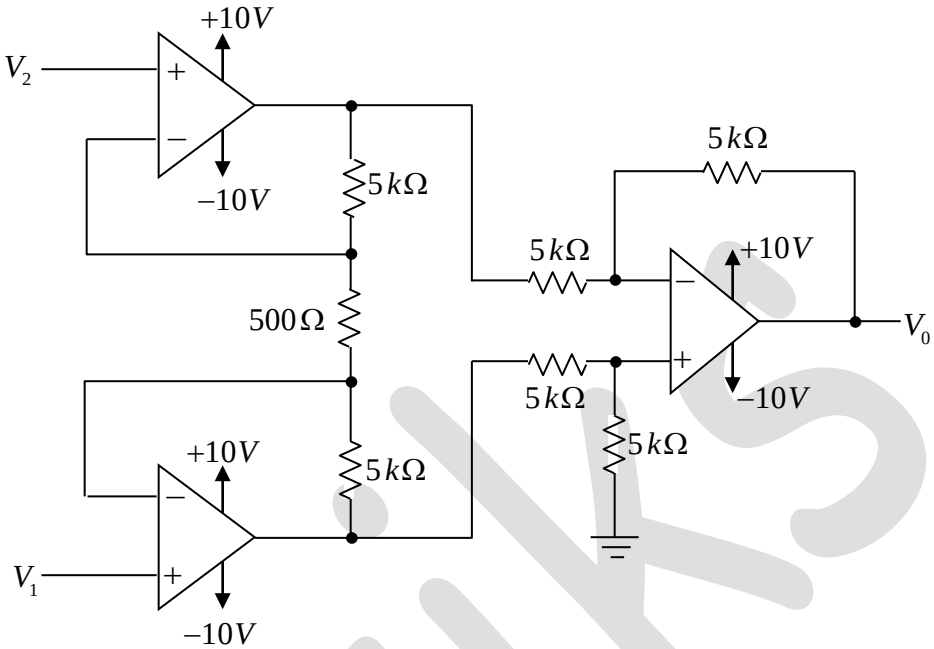

Ans. 8: 5305

Solution:

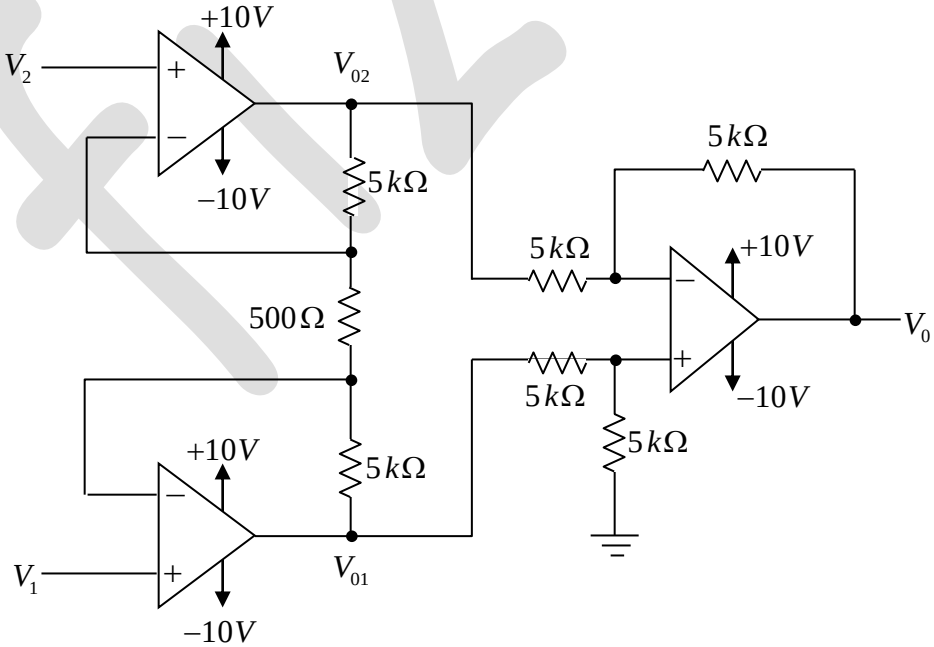

From Superposition Theorem

$$V_{02} = V_2' + V_{01}' = \left(1+\frac{5}{5.5}\right)V_2 - \frac{5}{5.5}V_{01} = 1.91V_2 - 0.91V_{01}$$

$$V_{01} = V_1' + V_{02}' = \left(1+\frac{5}{5.5}\right)V_1 - \frac{5}{5.5}V_{02} = 1.91V_1 - 0.91V_{02}$$

Thus $V_{01} - V_{02} = (1.91V_1 - 0.91V_{02}) - (1.91V_2 - 0.91V_{01})$

$$\Rightarrow V_{01} - 0.91V_{01} - V_{02} + 0.91V_{02} = 1.91V_1 - 1.91V_2$$

$$\Rightarrow 0.09V_{01} - 0.09V_{02} = 1.91V_1 - 1.91V_2 \Rightarrow V_{01} - V_{02} = \frac{1.91}{0.09}(V_1 - V_2)$$

$$\Rightarrow V_{01} - V_{02} = \frac{1.91}{0.09}(2.5V - 2.25V) = 5.305V$$

Now, $V_0 = V_{02}'' + V_{01}'' = -\frac{5}{5}V_{02} + \left(1+\frac{5}{5}\right)\frac{5}{5+5}V_{01} = -V_{02} + V_{01} = V_{01} - V_{02}$

$$\Rightarrow V_0 = V_{01} = V_{01} - V_{02} = 5.305V = 5305\,mV$$

Q9. Some bacteria are added to a bucket at time 10 am. The number of bacteria doubles every minute and reaches a number 16×10^{15} at $10:18$ am. How many seconds after 10 am were there 25×10^{13} bacteria?

Ans. : 0720

Q10. A cleaning machine presses a circular mop of radius $R = 30\,cm$ vertically down on a floor with a total force $F = 25N$ and rotates it with a constant angular speed about the vertical axis passing through the centre of mop. If the force is distributed uniformly over the mop and if the coefficient of friction between the mop and the floor is $\mu = 0.25$, what is the value of torque in N - cm applied by the machine on the mop?

Ans. : 0125

Solution: dN is normal force in area $rdrd\theta$; $\quad dN = \frac{F}{\pi R^2}rdrd\theta$

$$\tau = r\times dF = r\mu dN = r\mu\frac{F}{\pi R^2}rdrd\theta = \frac{F\mu}{\pi R^2}\int_0^R r^2dr\int_0^{2\pi}d\theta = \frac{F\mu}{\pi R^2}\frac{R^3}{3}2\pi = \frac{2F\mu R}{3}$$

$$\Rightarrow \tau = \frac{2\times25\times0.25\times0.30}{3} = 125\,N\text{-}cm$$