Data 188: Introduction to Deep Learning

Transformers (Part 2)

Speaker: Eric Kim
Lecture 17 (Week 11)
2026-04-02, Spring 2026. UC Berkeley.

Rev01: 2026-03-30 10:00 PM PST

Announcements

- Midterm grades out!
  - Regrade requests via Gradescope
    - Last call: Wednesday April 1st, 11:59 PM PST

- HW3 released: "Intro to Pytorch"
  - Tip: the remaining homework assignments in this course will not use Needle (ie your previous HW0 -> HW2).

Today's lecture

Transformers (Part 2!)

Encoders: classification techniques

Decoders

- Cross attention
- Masked self-attention ("causal self attention")

Sequence-to-sequence tasks

- Ex: Machine translation

(for fun)

Deep in the pytorch implementation for `torch.nn.functional.multi_head_attention_forward()`, there is this funny comment [link]:

- (open-source can be fun!)

pytorch / torch / nn / functional.py

Code Blame 6300 lines (5389 loc) · 231 KB ·

```
def multi_head_attention_forward(
    # adjust dropout probability
    if not training:
        dropout_p = 0.0

    #
    # (deep breath) calculate attention and out projection
    #

    if need_weights:
        B, Nt, E = q.shape
        q_scaled = q * math.sqrt(1.0 / float(E))

        assert not (
            is_causal and attn_mask is None
        ), "FIXME: is_causal not implemented for need_weights"

        if attn_mask is not None:
            attn_output_weights = torch.baddbmm(
                attn_mask, q_scaled, k.transpose(-2, -1)
            )
```

Encoder: Classification?

Recall: a Transformer encoder performs the following:

- Input: sequence X (shape=[batchsize, n, d])
- Output: representation Y (shape=[batchsize, n, d])
- Where Y is a learned transformation of X, via multi-head self attention (MHA), MLP's
- Notably, output token Y[:, ind_token, :] corresponds to input token X[:, ind_token, :]
- **Question**: how to perform classification on the output Y?

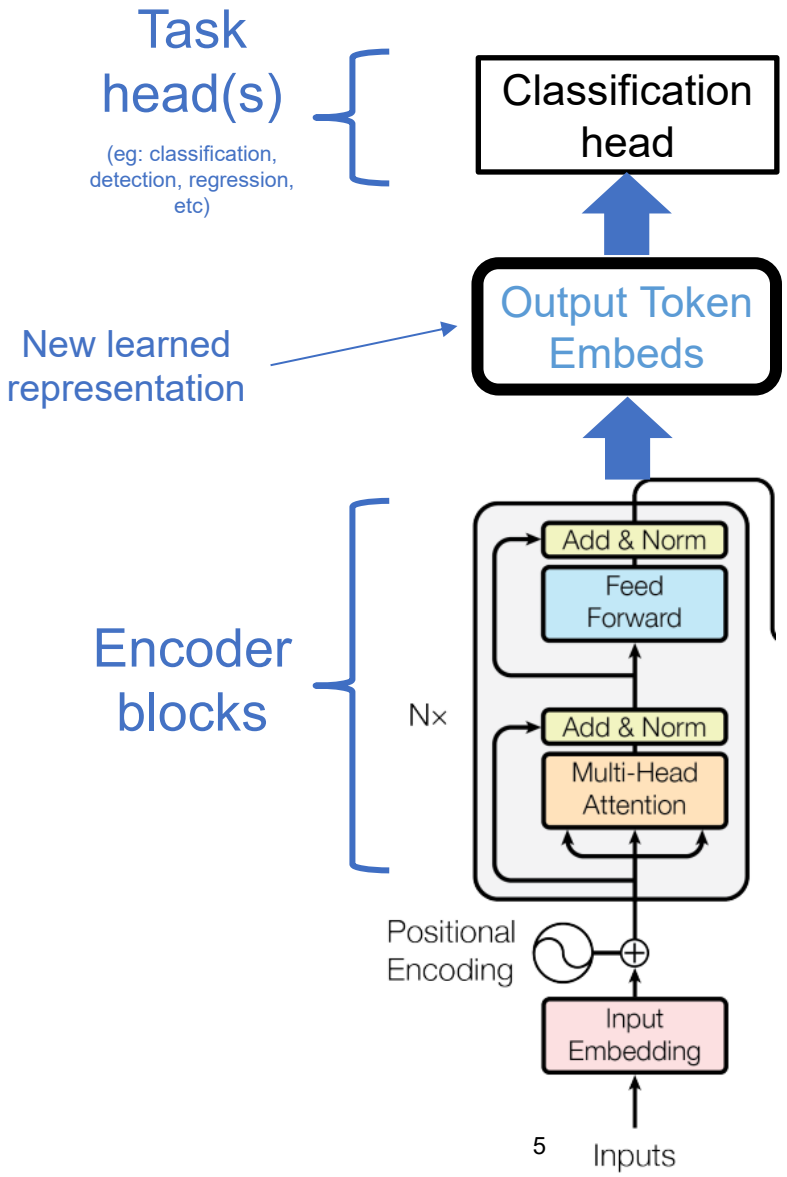

TransformerEncoder pytorch code: [link]

Encoder Classification V0: Naive classifier

Proposal: flatten the Y from [batchsize, n, d] to [batchsize, n*d], and add a Linear(in=n*d, out=num_classes) layer after the Encoder output.

Question: what are the pros/cons of this?

Pro: Simple

Con:
Hardcodes the sequence length into the classifier, which means you can't easily modify the sequence length past whatever length you used during training

Can be computationally expensive: for long sequence lengths and large number of target classes, the Linear layer can become too large

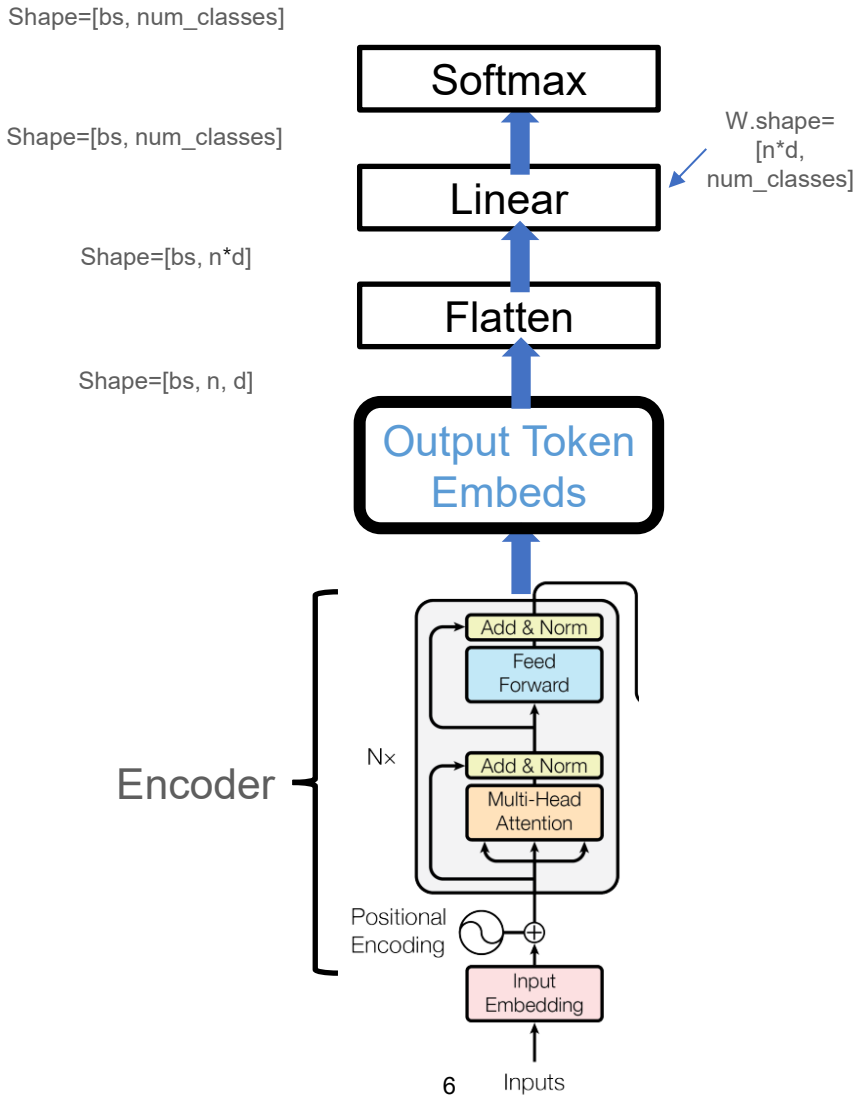

Classification approach 1: "CLS" token

Key idea: prepend a "**CLS**" token to the start of every sequence. Then, train a classifier on top of this CLS token embedding

- Intuition: CLS token stores the "global" info about the sentence

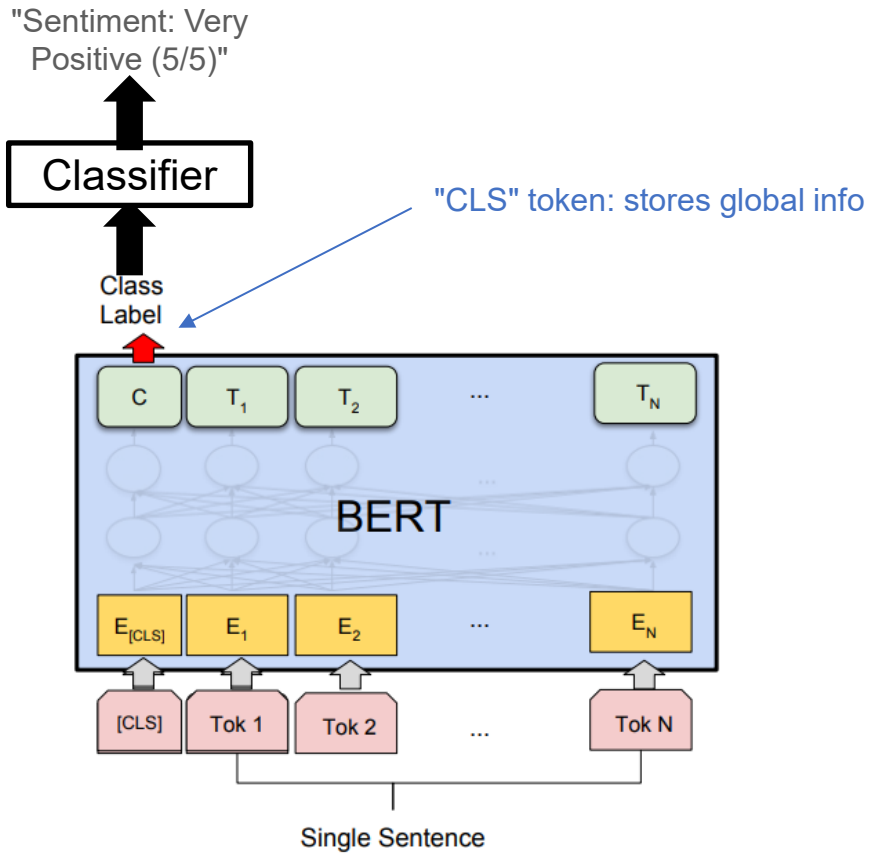

(b) Single Sentence Classification Tasks: SST-2, CoLA

Classification approach 2: Token aggregation

Key idea: aggregate the `n` output tokens into a single output embedding, then add your classifier on top of this

- Ex: average, max

After aggregation: [bs, d]

Before aggregation: [bs, n, d]

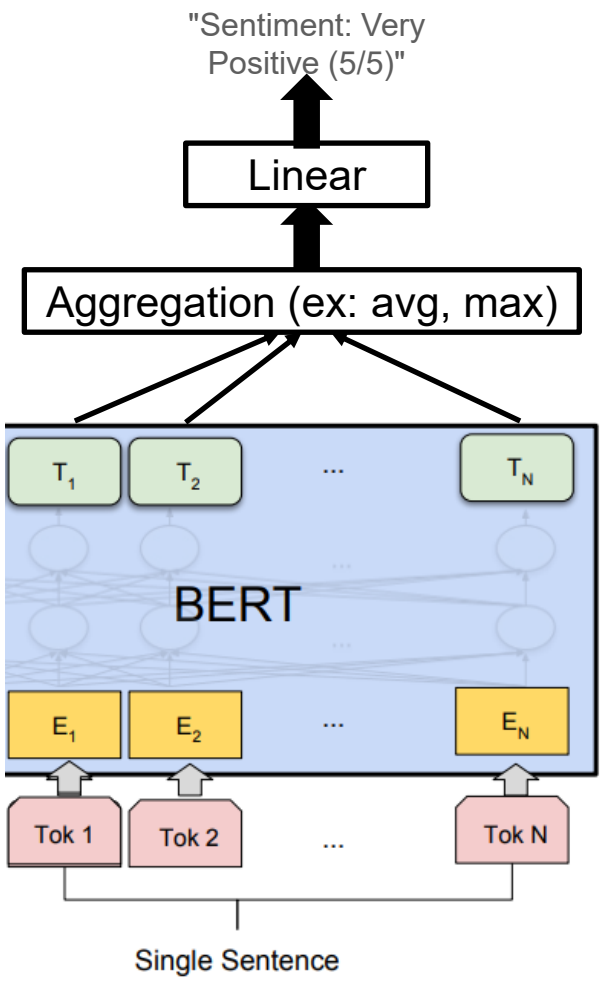

Question: what is the shape of the Linear layer's W weight?

Answer: [d, num_classes]

Decoder

Useful for tasks involving token generation

- Ex: machine translation, text summarization, question-and-answer bots, etc.

Key concepts

- Cross-attention
- Masked self attention
- Auto-regressive inference

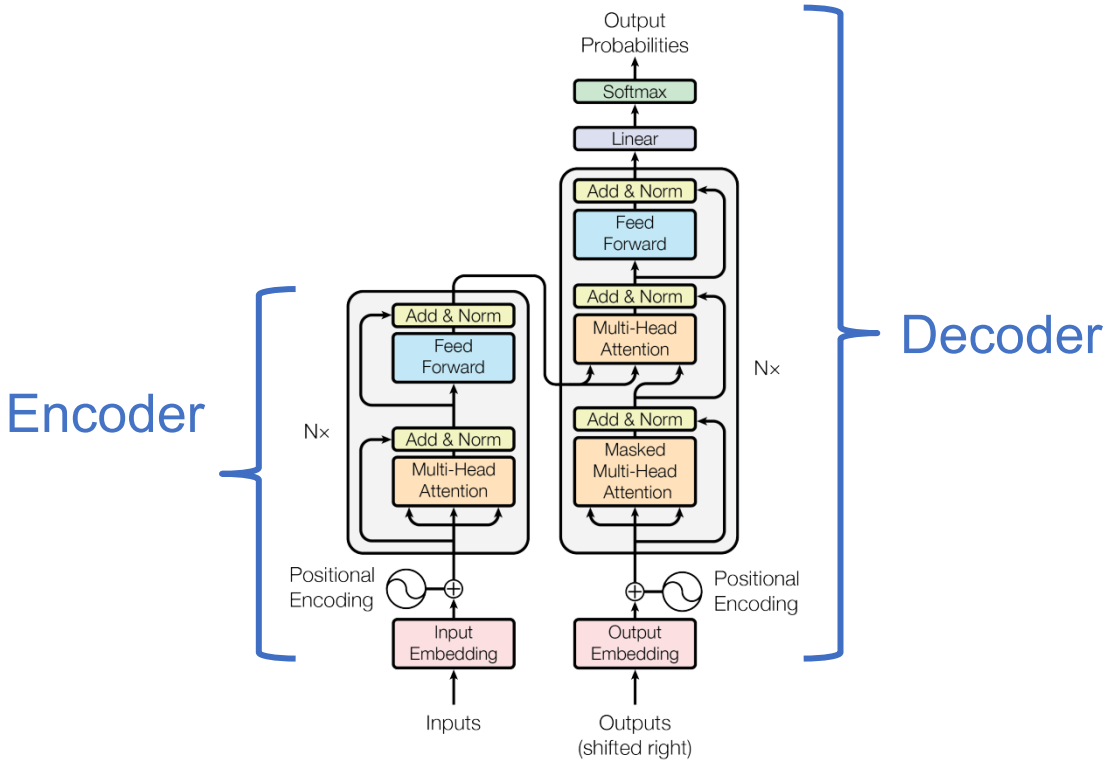

Figure 1: The Transformer - model architecture.

Cross attention

Recall: in the Encoder's multi-head attention (MHA), we had only one input sequence, aka **"Self attention"**

"Cross attention": MHA but with **two** different input sequences: X_{tgt}, X_{src}

<u>Ex</u>: consider English->French translation, where we have a target sequence X_{tgt} (French) and an input sequence X_{src} (English)

Intuition: given X_{tgt} and X_{src}, do the following

- **Cross-attention weights**: determine how important tokenA from X_{src} is to tokenB from X_{tgt}
- **Attention-weighted transform**: given cross-attention weights, transform X_{src}

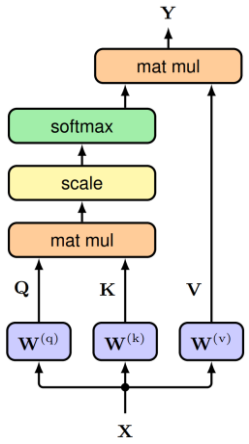

Self-attention

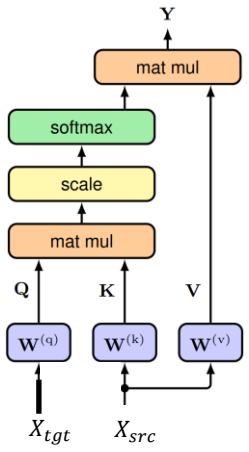

Cross-attention

Cross attention: seq lengths

Note that, in this formulation, the sequence lengths are allowed to be different for X_{tgt} and X_{src}!

Fortunately, all shapes adjust in the natural way:

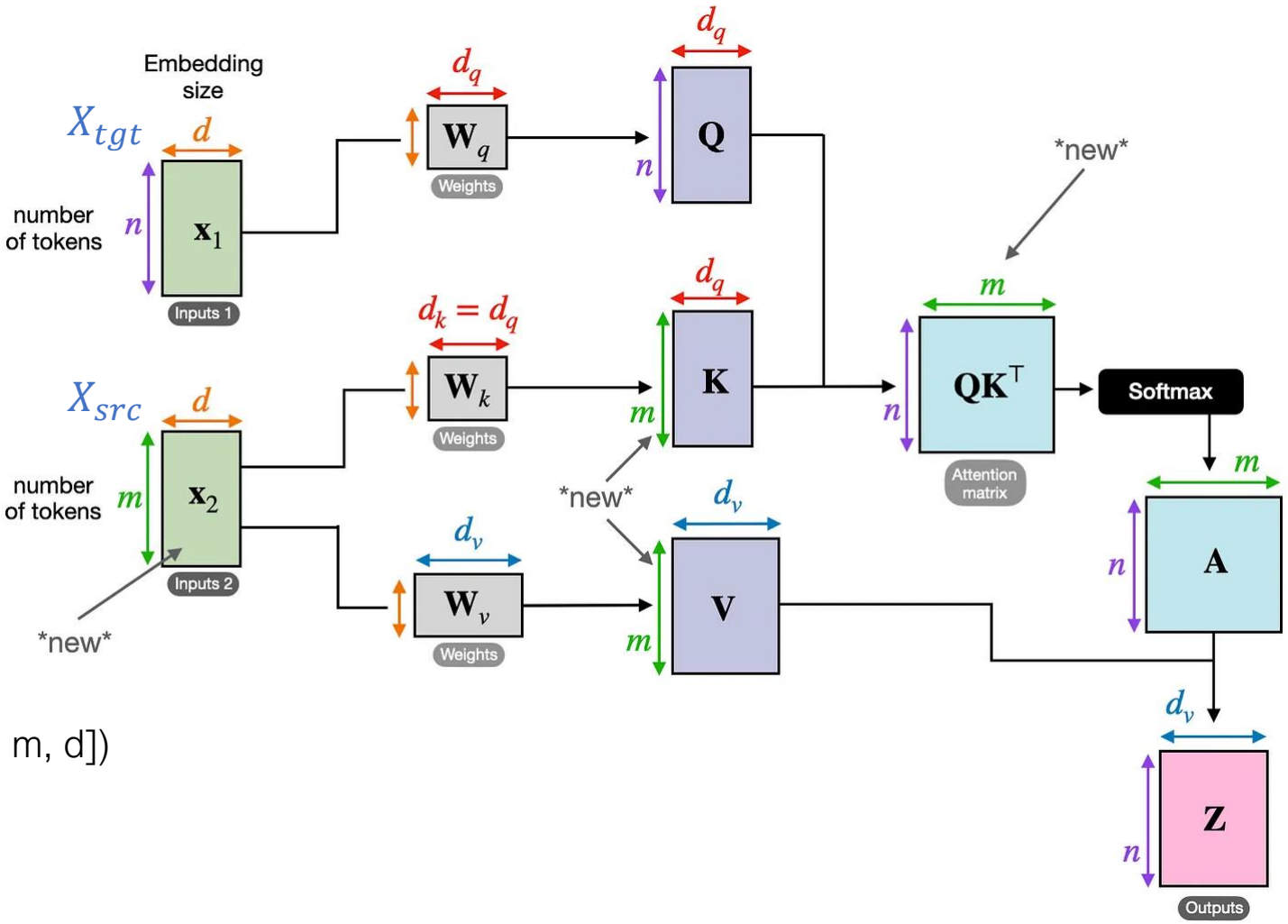

Input: X_{tgt} (shape=[bs, n, d]), X_{src} (shape=[bs, m, d])
Output: Z (shape=[bs, n, d])

Important: X_{tgt} determines the output sequence length!

https://magazine.sebastianraschka.com/p/understanding-and-coding-self-attention

Multi-head cross attention: equations

Input: X_{tgt} (shape=[n, d]), X_{src} (shape=[m, d])
Output: Y (shape=[n, d])

Let `h` be number of heads.

$$\boldsymbol{Q_h = X_{tgt} W_h^q}$$
$$\boldsymbol{K_h = X_{src} W_h^k}$$
$$\boldsymbol{V_h = X_{src} W_h^v}$$

$\boldsymbol{W_h^q, W_h^k, W_h^v}$ shape=[d, d_h]

$\boldsymbol{Q_h}$ shape=[n, d_h]

$\boldsymbol{K_h, V_h}$ shape=[m, d_h]

$d_h = floor(\frac{d}{h})$

$\boldsymbol{H}$ shape=[n, d_h]

$$\boldsymbol{H_h = attention(Q_{,h}\ K_h, V_h) = softmax\left(\frac{Q_h K_h^T}{\sqrt{d_h}}\right) V_h}$$

$$\mathbf{Y} = \boldsymbol{Concat(H_1, \ldots, H_h) W^o}$$

W^o shape=[d, d]
Y.shape=[n, d]

Can do **multi-head** cross-attention in the same way as self-attention: split up Q, K, V in the `d` dimension. Assumes that both X_{tgt} and X_{src} have the same embed dim!

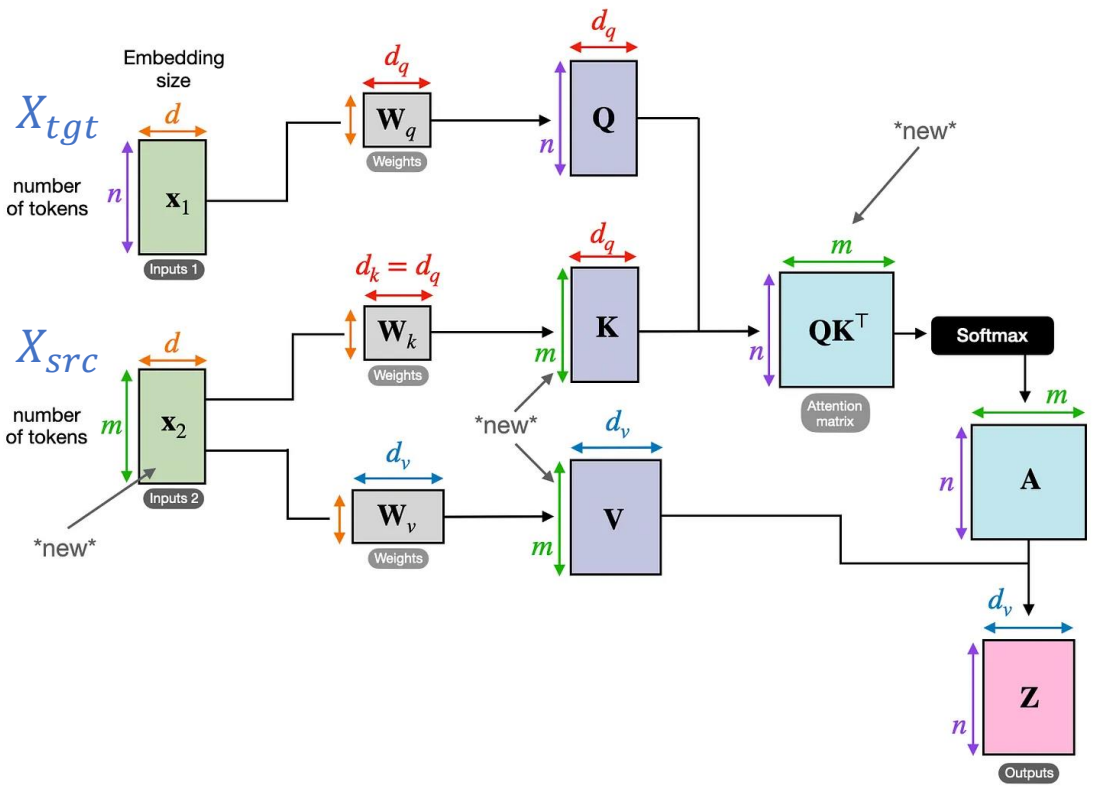

Important: X_{tgt} determines the output sequence length!

Note the asymmetry: X_{src} is what is transformed! If you're concerned that information from X_{tgt} won't get propagated, that's OK, the arch designers kept that in mind (spoiler alert: residual connection)

https://magazine.sebastianraschka.com/p/understanding-and-coding-self-attention

Cross-attention: attention scores

Cross-attention scores lets us see what tokens from X_{src} are "relevant" to which tokens in X_{tgt}

Ex: A[2, 1] = 0.7 means source token "ate" has high importance 0.7 to the target token "pris" for the machine translation task.

- French: "pris" means "took" (aka "eat")

X_{src}

$$
X_{tgt}
\begin{array}{r}
\text{"j'ai"} \\
\text{"déjà"} \\
\text{"pris"} \\
\text{"le"} \\
\text{"petit"} \\
\text{"déjeuner"}
\end{array}
\begin{array}{c}
\begin{array}{cccc} \text{"I"} & \text{"ate"} & \text{"breakfast"} & \text{"already"} \end{array} \\
\begin{bmatrix}
0.8 & 0.2 & 0.1 & 0.0 \\
0.1 & 0.2 & 0.1 & 0.6 \\
0.1 & 0.7 & 0.2 & 0.1 \\
0.0 & 0.2 & 0.8 & 0.0 \\
0.0 & 0.1 & 0.9 & 0.0 \\
0.0 & 0.1 & 0.9 & 0.0
\end{bmatrix}
\end{array}
$$

"I ate breakfast already" -> "j'ai déjà pris le petit déjeuner"

Masked self attention: motivation

Let's consider the **machine translation problem**

Dataset: paired sentences from source language to target language (ex: French to English)

Task:

- Given English text, translate it to French

Dataset rows

"I ate breakfast already"
-> "j'ai déjà pris le petit déjeuner"

"Where is the bathroom?"
-> "où sont les toilettes?"

...

Aside: tokenizers and "control characters"

Clever trick: represent the start and end of a sequence via "<START>" and "<END>" tokens. These are special "control" tokens added to the tokenizer vocabulary

- Implication: model emits <END> to signal to stop generating tokens

```
tokens = ["hello", "there"]
=> [TOKEN_START, "hello", "there", TOKEN_END]
```

Aside: tokenizers and "control characters"

Other common control tokens:

- <PAD>: if you need to pad your input to a specific seq_len (ex: batching N input sentences each with different number of tokens), insert <PAD> tokens (typically right-pad)
- <UNKNOWN>: if an unexpected input comes in (ie text never seen before in training)
- <CLS>: the classification token we've seen before!

Demo: huggingface text encoder

```
tokenizer = BertTokenizer.from_pretrained('bert-base-uncased')
model = BertModel.from_pretrained("bert-base-uncased")
input_text = "I am Eric meow"

# Tokenizer
input_tokens = tokenizer(input_text, return_tensors='pt')
print("input_tokens: ", input_tokens)
print("input_tokens.input_ids.shape: ", input_tokens.input_ids.shape)
print("convert_ids_to_tokens: ",
tokenizer.convert_ids_to_tokens(input_tokens.input_ids[0, :]))

output = model(**input_tokens)
print("output shape: ", output.last_hidden_state.shape)
```

Note: tokenizer can break up a single word into multiple tokens!

```
input_tokens:  {'input_ids': tensor([[ 101, 1045, 2572, 4388, 2033, 5004,  102]]),
'token_type_ids': tensor([[0, 0, 0, 0, 0, 0, 0]]), 'attention_mask': tensor([[1, 1, 1, 1, 1, 1, 1]])}
input_tokens.input_ids.shape:  torch.Size([1, 7])
convert_ids_to_tokens:  ['[CLS]', 'i', 'am', 'eric', 'me', '##ow', '[SEP]']

output shape:  torch.Size([1, 7, 768])
```

In this implementation, <SEP> is the "END" token

dim_embed: 768

https://huggingface.co/google-bert/bert-base-uncased

Machine translation setup

Given a source-language sentence (EN) and a target-language sentence (FR), how to we set up the training task/loss for the translation task?

One way: pose it as a "next token prediction" task!

- Notably: inference is done in an iterative auto-regressive manner

ArgMax: aka "Choose token with largest predicted probability score"

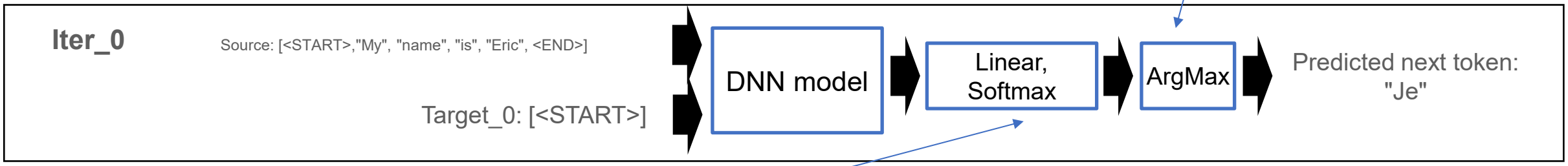

Note: "Linear, Softmax" produces a probability score vector over the tokenizer vocabulary size. Ex: Bert tokenizer has ~30k tokens in its vocabulary [link]

Softmax is done across the entire tokenizer vocabulary (ex: 30k vocab!)

```
# Token, predicted_probability
Token0 ("eau"): 0.01
Token1 ("boulangerie"): 0.02
...
Token42 ("Je"): 0.9
...
Token29999 ("!"): 0.0
```

Translation: next token prediction (autoregressive inference)

Note: "My name is Eric" -> "Je m'appelle Éric"

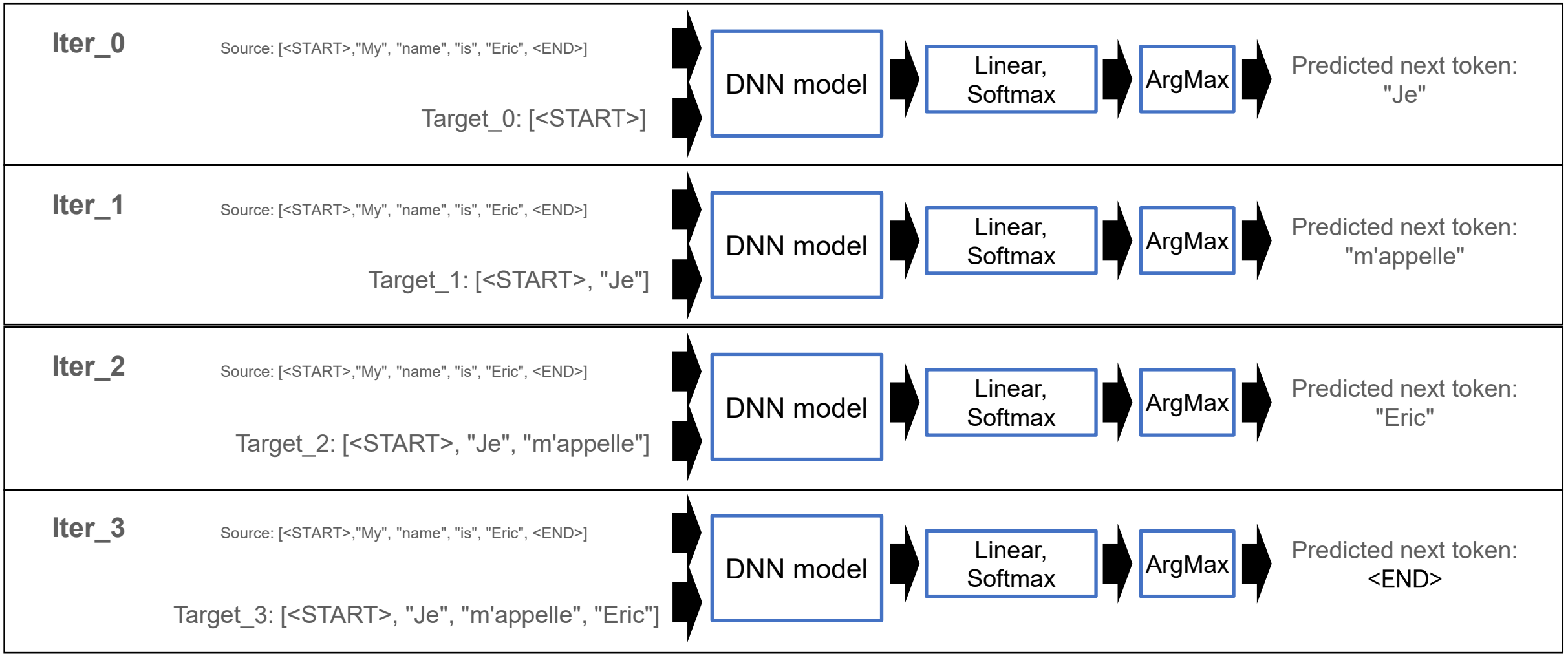

Output: [<START>, "Je", "m'appelle", "Eric", <END>]

Translation loss

How to build a training loss out of this idea?

Answer: all-possible next-token prediction tasks (classification loss)!

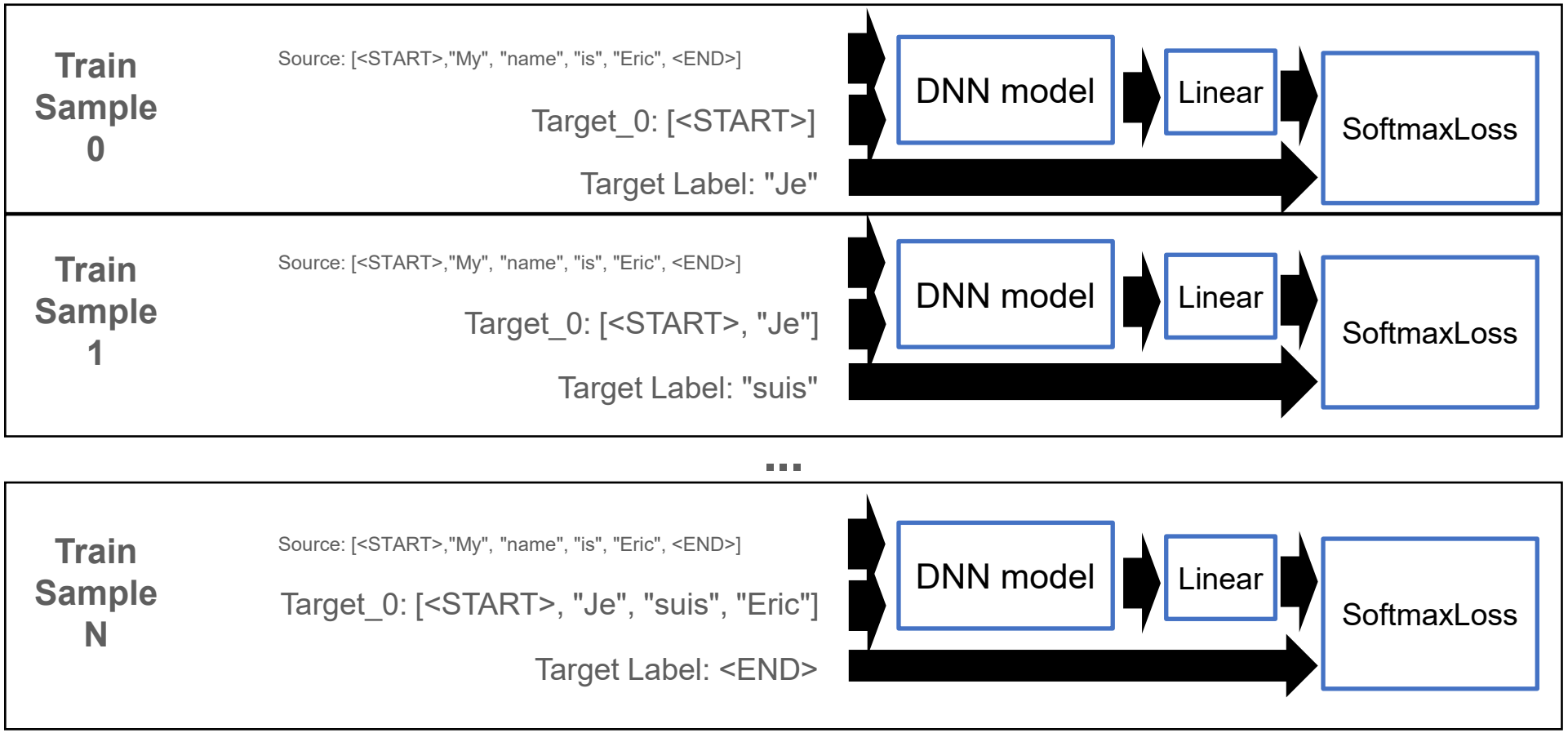

Translation loss: optimization opportunity?

In practice: for a target sequence with length N, we don't want to have to do N separate forward passes during training (lots of repeated computation!)

Is there a way to do a single forward pass passing in the full target sequence once and getting all N prediction tasks at once?

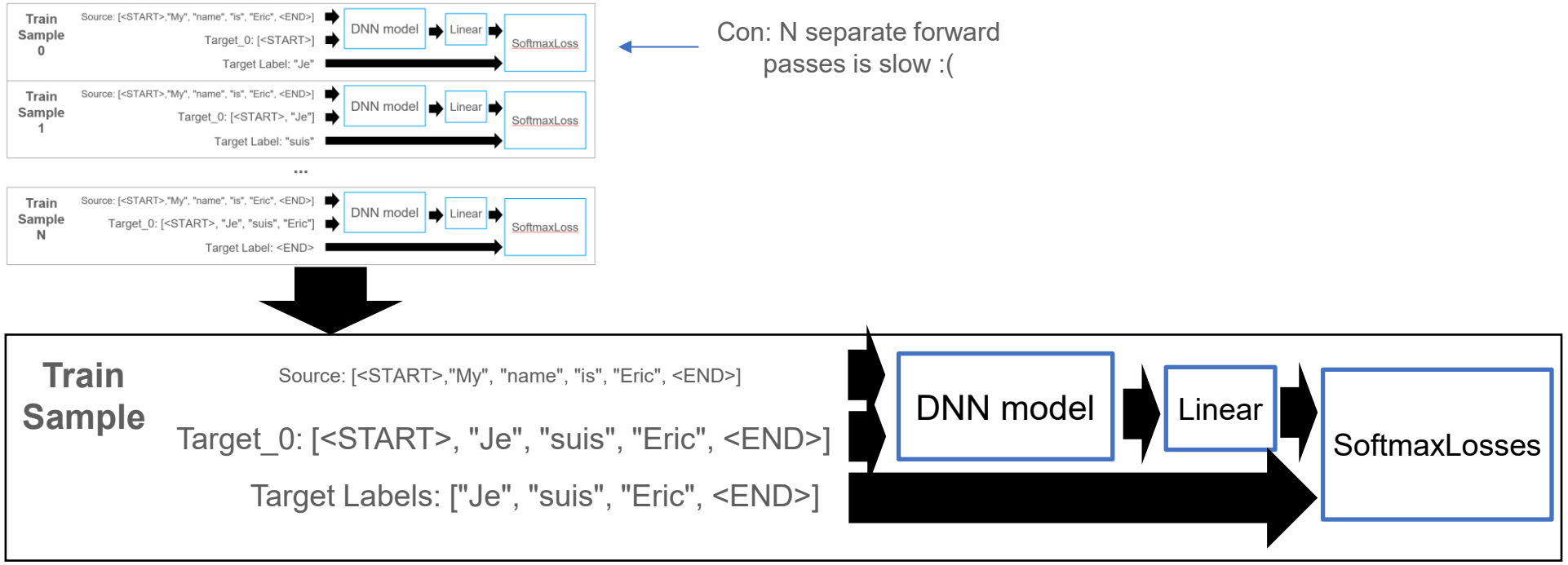

Translation loss: Attempt 1

```
# Token, predicted_probability
Token0 ("eau"): 0.01
Token1 ("boulangerie"): 0.02
...
Token42 ("Je"): 0.9
...
```

ind=0, target label: 42

```
# Token, predicted_probability
Token0 ("eau"): 0.01
Token1 ("boulangerie"): 0.02
...
Token9001 ("suis"): 0.75
...
```

ind=1, target label: 9001

Idea: let's connect our Encoder and Decoder via cross-attention

- **Encoder**: given source sequence (EN), generate new **source** token embeds
- **Decoder**: given target sequence (FR) and Encoder output (EN), generate new **target** token embeds

Use cross-attention to "fuse" information from source sequence (EN) with target sequence (FR)

Intuition: for each sequence position `ind`, predict the correct output token

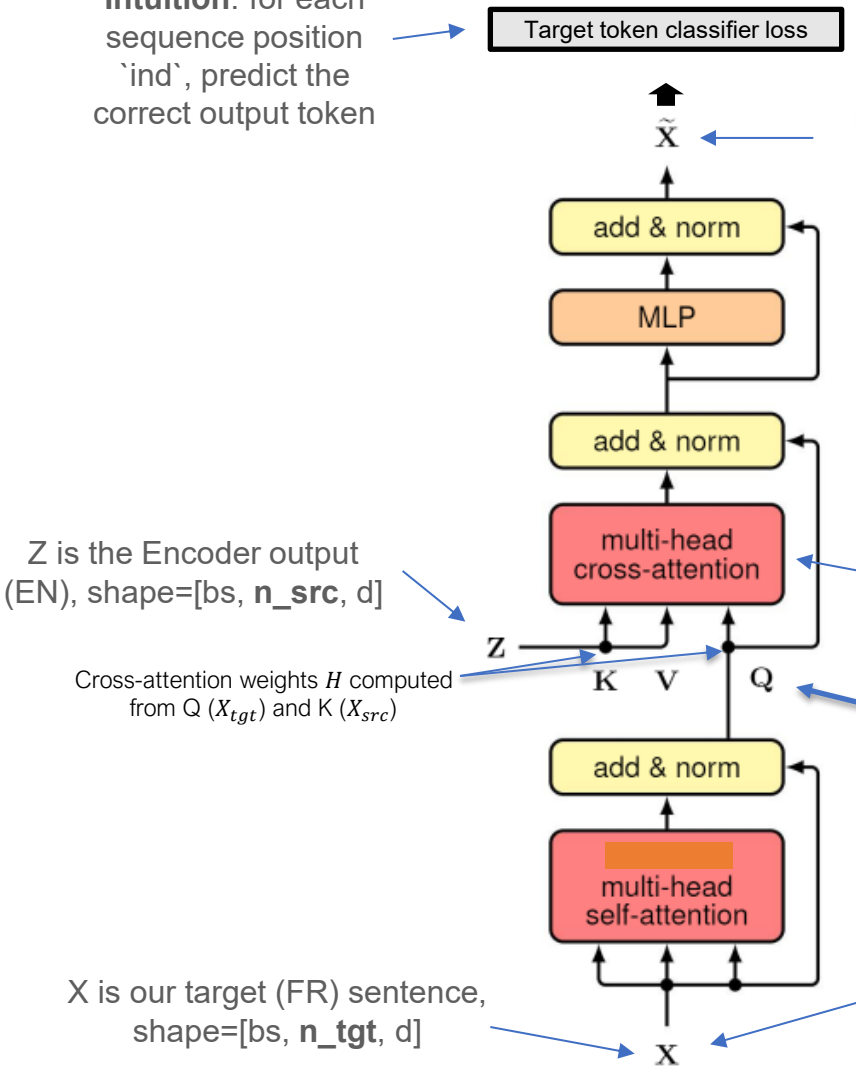

Decoder output embeds. Shape=[bs, **n_tgt**, d]

Z is the Encoder output (EN), shape=[bs, **n_src**, d]

Cross-attention lets us "mix" two input sequences Output shape: [bs, **n_tgt**, d]

Cross-attention weights H computed from Q (X_{tgt}) and K (X_{src})

Recall: Q (X_{tgt}) determines output sequence length in cross attention

X is our target (FR) sentence, shape=[bs, **n_tgt**, d]

Note: omitted in this figure are the positional embeddings added to input X

Translation loss: Issue?

```
# Token, predicted_probability
Token0 ("eau"): 0.01
Token1 ("boulangerie"): 0.02
...
Token42 ("Je"): 0.9
...
```

ind=0, target label: 42

```
# Token, predicted_probability
Token0 ("eau"): 0.01
Token1 ("boulangerie"): 0.02
...
Token9001 ("suis"): 0.75
...
```

ind=1, target label: 9001

Question: from a modeling perspective, why might this setup be suboptimal?

- Hint: information leakage

Answer: decoder can "cheat" and use information from later in the sequence when predicting the current token!

- Ex: when predicting the "suis" token, we don't want it to look at the full ground truth sentence "je suis Eric" to trivially copy the answer.
- A prediction for sequence position `ind` should only use information before `ind` ("causality")

Intuition: for each sequence position `ind`, predict the correct output token

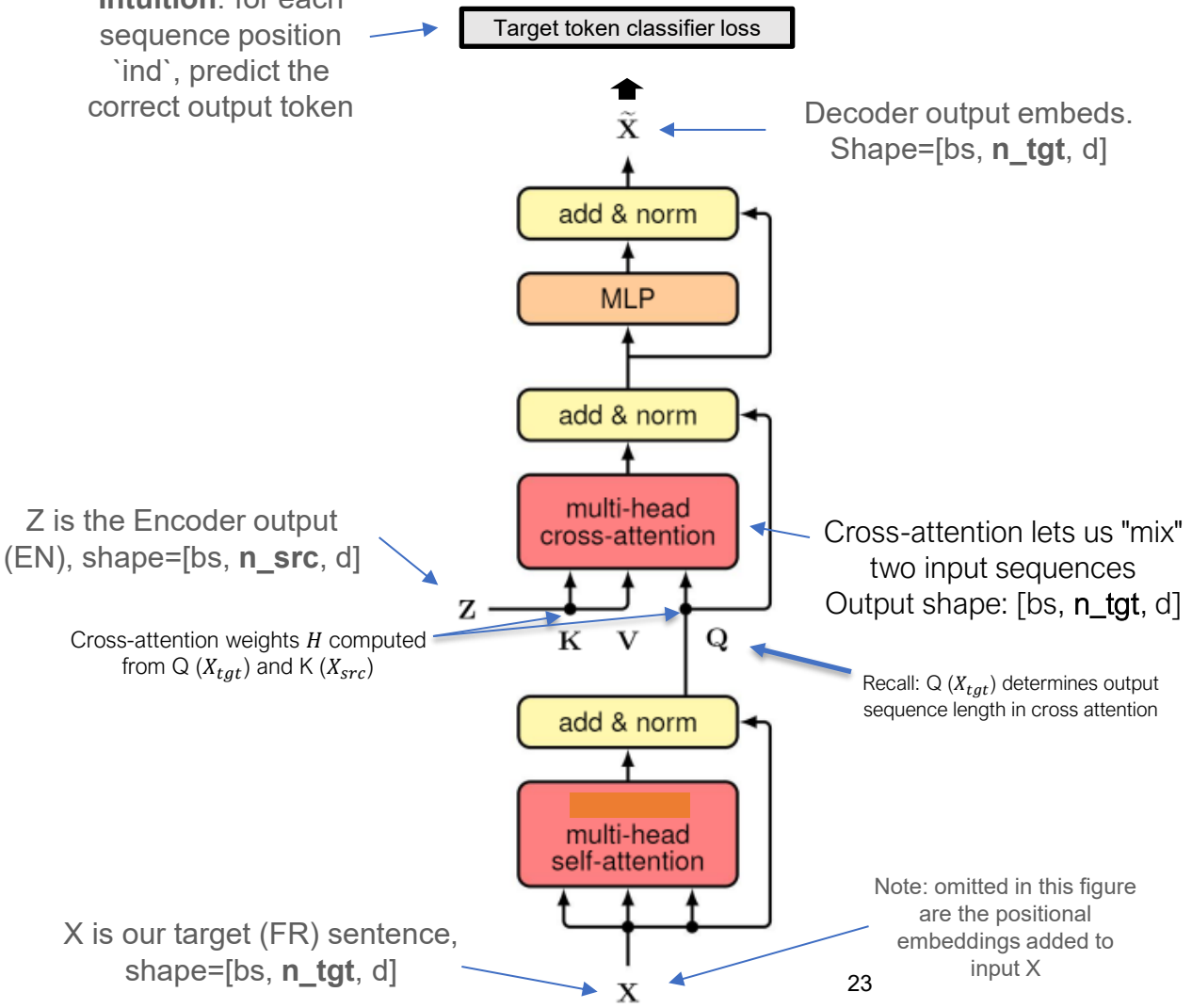

Decoder output embeds. Shape=[bs, **n_tgt**, d]

Z is the Encoder output (EN), shape=[bs, **n_src**, d]

Cross-attention lets us "mix" two input sequences Output shape: [bs, **n_tgt**, d]

Cross-attention weights H computed from Q (X_{tgt}) and K (X_{src})

Recall: Q (X_{tgt}) determines output sequence length in cross attention

X is our target (FR) sentence, shape=[bs, **n_tgt**, d]

Note: omitted in this figure are the positional embeddings added to input X

Attention scores (no causal mask)

$$
\begin{array}{r c}
 & \begin{array}{ccccc} \text{<START>} & \text{"je"} & \text{"suis"} & \text{"Eric"} & \text{<END>} \end{array} \\
\begin{array}{r} \text{<START>} \\ \text{"je"} \\ \text{"suis"} \\ \text{"Eric"} \\ \text{<END>} \end{array} &
\begin{bmatrix}
0.8 & 0.2 & 0.1 & 0.1 & 0.2 \\
0.0 & 0.1 & 0.9 & 0.3 & 0.1 \\
0.1 & 0.2 & 0.1 & 0.6 & 0.1 \\
0.1 & 0.7 & 0.2 & 0.1 & 0.2 \\
0.0 & 0.2 & 0.8 & 0.0 & 0.9
\end{bmatrix}
\end{array}
$$

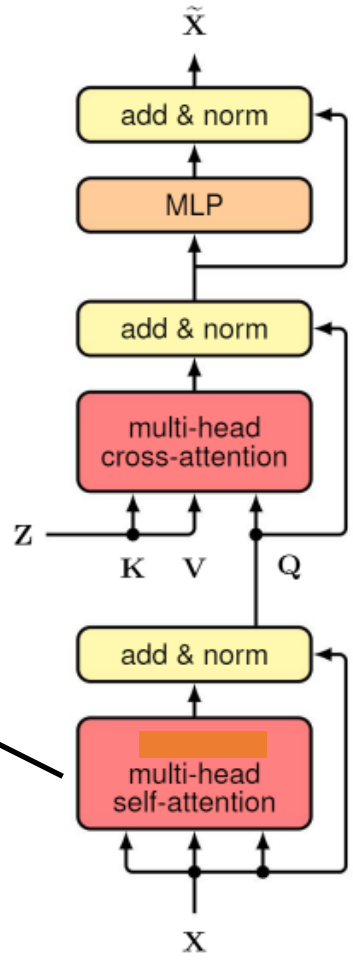

Issue: when predicting the first token "je", the decoder can utilize information from the rest of the sequence, which can result in cheating (ex: trivial copy).
Solution: apply a "look ahead" mask to the decoder's self-attention weights

Solution: attention scores (with causal mask)

$$
\begin{array}{r c}
 & \begin{array}{ccccc} \text{<START>} & \text{"je"} & \text{"suis"} & \text{"Eric"} & \text{<END>} \end{array} \\
\begin{array}{r} \text{<START>} \\ \text{"je"} \\ \text{"suis"} \\ \text{"Eric"} \\ \text{<END>} \end{array} &
\begin{bmatrix}
0.8 & -inf & -inf & -inf & -inf \\
0.0 & 0.1 & -inf & -inf & -inf \\
0.1 & 0.2 & 0.1 & -inf & -inf \\
0.1 & 0.7 & 0.2 & 0.1 & -inf \\
0.0 & 0.2 & 0.8 & 0.0 & 0.9
\end{bmatrix}
\end{array}
$$

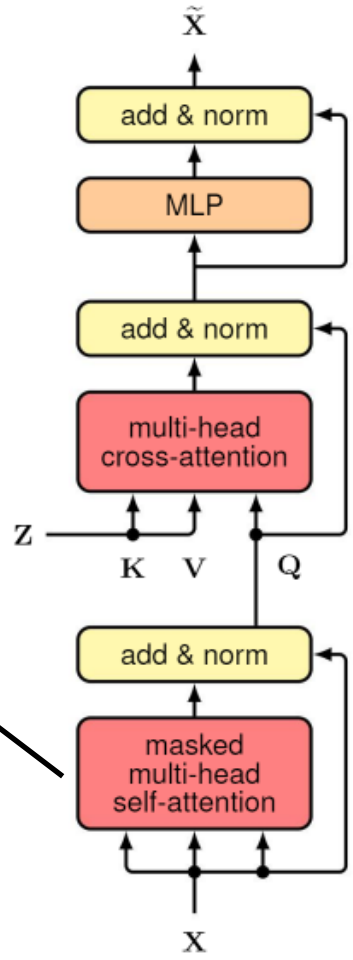

We apply the "look ahead" mask before the softmax(), and after the division by $\sqrt{d}$

Masked Attention scores (post softmax)

$$
\begin{array}{c}
 \\ \text{<START>} \\ \text{"je"} \\ \text{"suis"} \\ \text{"Eric"} \\ \text{<END>}
\end{array}
\begin{array}{c}
\begin{array}{ccccc} \text{<START>} & \text{"je"} & \text{"suis"} & \text{"Eric"} & \text{<END>} \end{array} \\
\begin{bmatrix}
0.8 & -inf & -inf & -inf & -inf \\
0.0 & 0.1 & -inf & -inf & -inf \\
0.1 & 0.2 & 0.1 & -inf & -inf \\
0.1 & 0.7 & 0.2 & 0.1 & -inf \\
0.0 & 0.2 & 0.8 & 0.0 & 0.9
\end{bmatrix}
\end{array}
\xrightarrow{\text{Softmax (along rows)}}
\begin{array}{c}
 \\ \text{<START>} \\ \text{"je"} \\ \text{"suis"} \\ \text{"Eric"} \\ \text{<END>}
\end{array}
\begin{array}{c}
\begin{array}{ccccc} \text{<START>} & \text{"je"} & \text{"suis"} & \text{"Eric"} & \text{<END>} \end{array} \\
\begin{bmatrix}
1.0 & 0 & 0 & 0 & 0 \\
0.1 & 0.9 & 0 & 0 & 0 \\
0.1 & 0.8 & 0.1 & 0 & 0 \\
0.1 & 0.7 & 0.2 & 0.1 & 0 \\
0.0 & 0.2 & 0.3 & 0.0 & 0.5
\end{bmatrix}
\end{array}
$$

Note that the Softmax(-Inf) turns into 0.0 probability.

Now, the decoder can't "cheat" by looking ahead.

Masked Attention scores (post softmax)

Exercise: show that the output of Masked attention leads to the property that, for output token at sequence position `ind`, H[bs, ind, :] only includes information from the first `ind` tokens in V.
Aka "masked attention indeed fixes the cheating problem"

$$\boldsymbol{Q} = \boldsymbol{X_{tgt} W_q}$$
$$\boldsymbol{K} = \boldsymbol{X_{tgt} W_k}$$
$$\boldsymbol{V} = \boldsymbol{X_{tgt} W_v}$$
$$\boldsymbol{H} = \boldsymbol{mask_attention(Q, K, V)} = \boldsymbol{Softmax}(\boldsymbol{mask}(\frac{\boldsymbol{QK^T}}{\sqrt{\boldsymbol{d}}}))$$
$$\boldsymbol{Y} = \boldsymbol{HV}$$

Ex: for n_tgt=4, d=2

$$\underbrace{\begin{bmatrix} 1.0 & 0 & 0 & 0 \\ 0.1 & 0.9 & 0 & 0 \\ 0.1 & 0.8 & 0.1 & 0 \\ 0.1 & 0.7 & 0.2 & 0.1 \end{bmatrix}}_{H} \underbrace{\begin{bmatrix} V_{00} & V_{01} \\ V_{10} & V_{11} \\ V_{20} & V_{21} \\ V_{30} & V_{31} \end{bmatrix}}_{V} = \underbrace{\begin{bmatrix} 1.0 * V_{00} & 1.0 * V_{01} \\ 0.1 * V_{00} + 0.9 * V_{10} & 0.1 * V_{01} + 0.9 * V_{11} \\ 0.1 * V_{00} + 0.8 * V_{10} + 0.1 * V_{20} & 0.1 * V_{01} + 0.8 * V_{11} + 0.1 * V_{21} \\ 0.1 * V_{00} + 0.7 * V_{10} + 0.2 * V_{20} + 0.1 * V_{30} & 0.1 * V_{01} + 0.7 * V_{11} + 0.2 * V_{21} + 0.1 * V_{31} \end{bmatrix}}_{Y}$$

$$= \begin{bmatrix} H_{00} * V_{[0,:]} \\ H_{10} * V_{[0,:]} + H_{11} * V_{[1,:]} \\ H_{20} * V_{[0,:]} + H_{21} * V_{[1,:]} + H_{22} * V_{[2,:]} \\ H_{30} * V_{[0,:]} + H_{31} * V_{[1,:]} + H_{32} * V_{[2,:]} + H_{33} * V_{[3,:]} \end{bmatrix}$$

Note that the 1st row of Y only depends on the first row of V, the 2nd row of Y only depends on the first two rows of V, etc.
Thus, we achieved our goal: the Y embedding at sequence position `ind` only relies on tokens V that precede it (causally).

Aside: Masked attention implementation

Tip: we can implement `mask_attention()` by adding a simple mask to the pre-softmax inputs:

$$\boldsymbol{Q} = \boldsymbol{X_{tgt}W_q}$$
$$\boldsymbol{K} = \boldsymbol{X_{tgt}W_k}$$
$$\boldsymbol{V} = \boldsymbol{X_{tgt}W_v}$$
$$\boldsymbol{H} = \boldsymbol{mask_attention(Q,K,V)} = \boldsymbol{Softmax}(\boldsymbol{mask}(\frac{\boldsymbol{QK^T}}{\sqrt{\boldsymbol{d}}}))$$
$$\boldsymbol{Y} = \boldsymbol{HV}$$

$$\underset{\text{(along rows)}}{\text{Softmax}}\left(\underbrace{\begin{bmatrix} 0.9 & 0.2 & 0.1 & 0.1 & 0.4 \\ 0.1 & 0.2 & 0.9 & 0.1 & 0.1 \\ 0.2 & 0.3 & 0.2 & 0.7 & 0.1 \\ 0.2 & 0.8 & 0.3 & 0.2 & 0.1 \\ 0.1 & 0.3 & 0.9 & 0.1 & 1.0 \end{bmatrix}}_{\frac{QK^T}{\sqrt{d}}} + \underbrace{\begin{bmatrix} 0 & -inf & -inf & -inf & -inf \\ 0 & 0 & -inf & -inf & -inf \\ 0 & 0 & 0 & -inf & -inf \\ 0 & 0 & 0 & 0 & -inf \\ 0 & 0 & 0 & 0 & 0 \end{bmatrix}}_{\text{attention_mask}}\right) = \underbrace{\begin{bmatrix} 1.0 & 0 & 0 & 0 & 0 \\ 0.1 & 0.9 & 0 & 0 & 0 \\ 0.1 & 0.8 & 0.1 & 0 & 0 \\ 0.1 & 0.7 & 0.2 & 0.1 & 0 \\ 0.0 & 0.2 & 0.3 & 0.0 & 0.5 \end{bmatrix}}_{\text{H}}$$

Recall: in Python (and most programming languages*), `-Inf + <any number> = -Inf`

*This property is defined by the IEEE floating point standard

Translation loss: Attempt 2!

```
# Token, predicted_probability
Token0 ("eau"): 0.01
Token1 ("boulangerie"): 0.02
...
Token42 ("Je"): 0.9
...
```

ind=0, target label: 42

```
# Token, predicted_probability
Token0 ("eau"): 0.01
Token1 ("boulangerie"): 0.02
...
Token9001 ("suis"): 0.75
...
```

ind=1, target label: 9001

We've (finally) arrived at a working Encoder+Decoder implementation for machine translation!

Masked MHA: prevent information leakage ("preserve causality")

Cross-attention: fuse information from source (EN) and target (FR) sequences

Train task: next-token prediction task

Intuition: for each sequence position `ind`, predict the correct output token

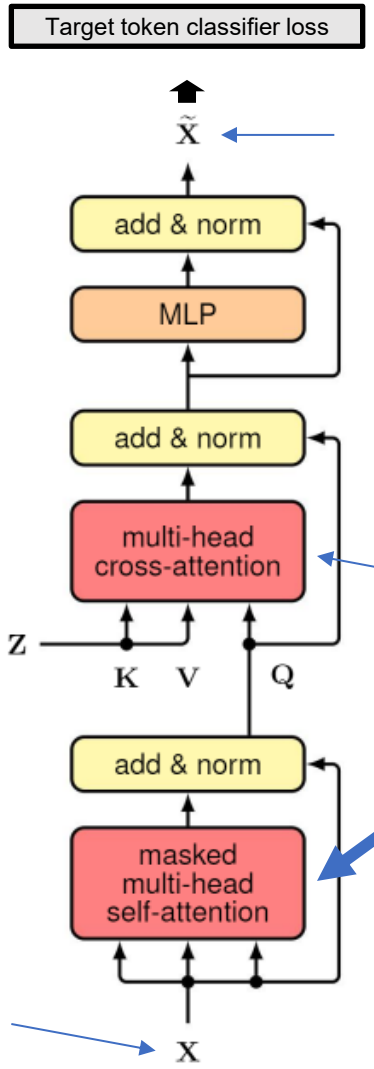

Decoder output embeds. Shape=[bs, **n_tgt**, d]

Z is the Encoder output. shape=[bs, **n_src**, d]

Recall: cross-attention lets us "mix" two input sequences
Output shape: [bs, **n_tgt**, d]

Masked MHA prevents decoder from "cheating"

X is our target sentence, shape=[bs, **n_tgt**, d]

Translation loss: next token prediction

For a given source->target dataset row, we turn it into multiple prediction tasks:

src="I am Eric"

Task1: Given src and tgt="<START>", predict: "Je"

Task2: Given src and tgt="<START> Je", predict: "suis"

Task3: Given src and tgt="<START> Je suis", predict: "Eric"

Task4: Given src and tgt="<START> Je suis Eric", predict: "<END>"

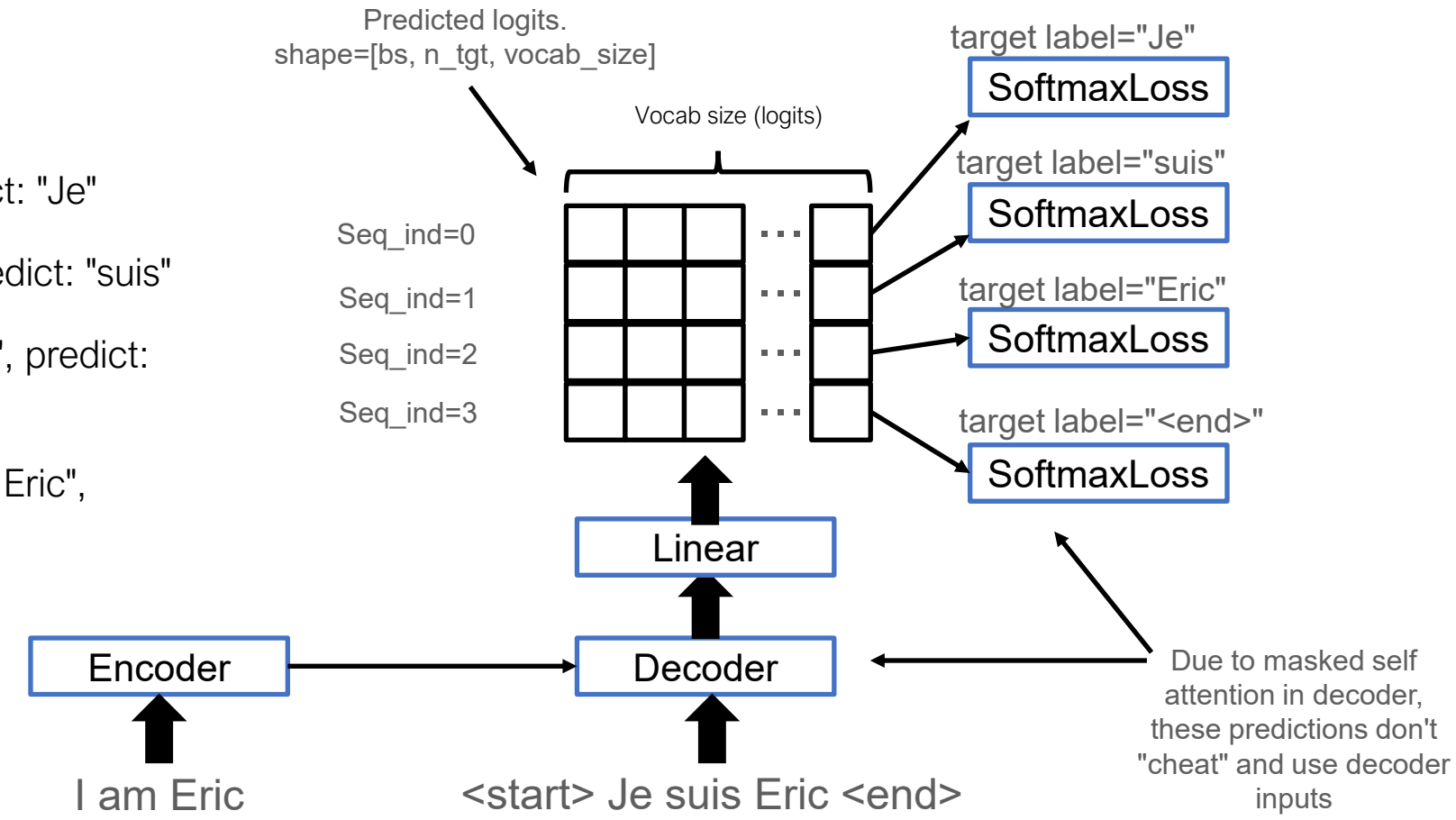

Encoder-Decoder models

The "Attention Is All You Need" paper [link]. Sequence-to-sequence model.

Tasks

- English->German, English->French translation
- "English constituency parsing"
  - Aka: Parse a sentence into a subject/verb/noun parse tree

```
                Sentence (S)
                     |
     +-------------+------------+
     |                          |
  Noun (N)               Verb Phrase (VP)
     |                          |
   John                 +-------+--------+
                        |                |
                     Verb (V)         Noun (N)
                        |                |
                      sees             Bill
```

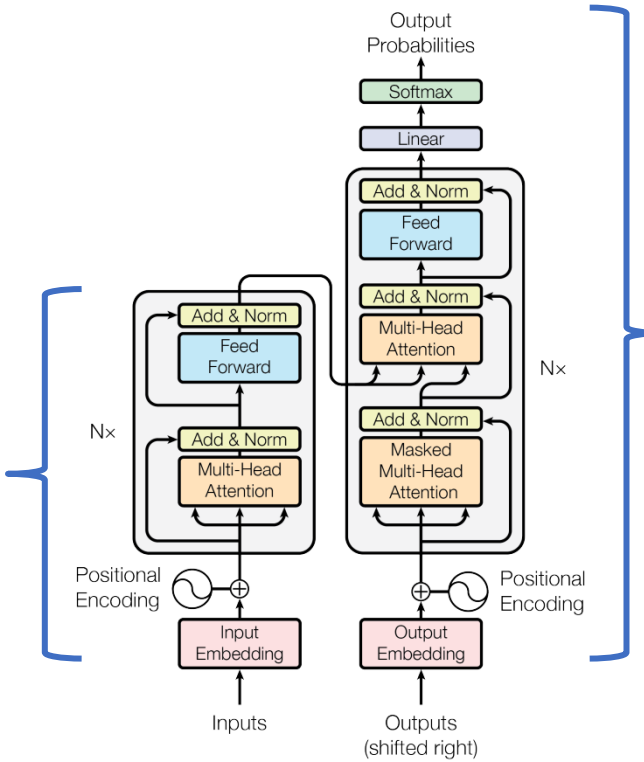

Figure 1: The Transformer - model architecture.

https://nlpprogress.com/english/constituency_parsing.html

Decoder-only models

Decoder-only models are popular for generative text models, like "chatbot" LLMs (ChatGPT, etc)

Task: next-token prediction

Training data: scrape the Internet for text (ex: Wikipedia, Reddit, etc)

No need for encoder, since for generative text there is only one sequence: no need to do cross-attention between a source sequence and target sequence.

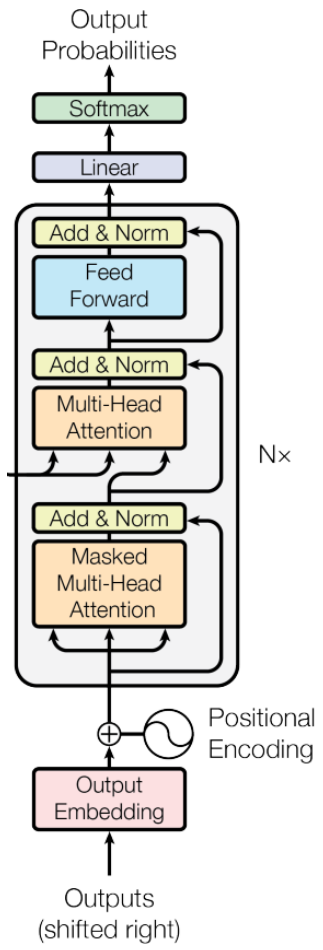

Summary: Transformer model types

Encoder only. Useful for learning a good token representation useful for downstream tasks, like classification (eg BERT).

Encoder+Decoder. Useful for sequence-to-sequence tasks, such as machine translation (ex: "English -> French").

Decoder only. Useful for generative tasks, like text generation (eg ChatGPT).

Many more fun topics!

Inference improvements for generative tasks

- Beam search
- Inject randomness into generation via sampling (rather than deterministic argmax)

More natural language processing (NLP) applications

- Generative text models (aka Chat-GPT)
- Pretraining/training/fine-tuning strategies