Luiss
Libera Università Internazionale
degli Studi Sociali Guido Carli

Lab on Block Cipher Operation Modes

Data Privacy and Security

Data Science and Management (DASMA)

LUISS

From Perfect Secrecy to Practical Security

> OTP is **theoretically perfect**, but **impractical** in real systems and **dangerous** when misused.

From Perfect Secrecy to Practical Security

> OTP is **theoretically perfect**, but **impractical** in real systems and **dangerous** when misused.

OTP limitations:

- Key must be **as long as the message** $\Longrightarrow$ leads to storage and distribution problems.
- Key must **never be reused** $\Longrightarrow$ hard to generate many keys at scale.
- Key must be **shared securely** in advance $\Longrightarrow$ requires a secure channel before communication.

From Perfect Secrecy to Practical Security

OTP is **theoretically perfect**, but **impractical** in real systems and **dangerous** when misused.

OTP limitations:

- Key must be **as long as the message** $\Longrightarrow$ leads to storage and distribution problems.
- Key must **never be reused** $\Longrightarrow$ hard to generate many keys at scale.
- Key must be **shared securely** in advance $\Longrightarrow$ requires a secure channel before communication.

Modern symmetric ciphers replace perfect secrecy with **computational security**, enabling short, reusable keys.

- **Perfect secrecy**: the ciphertext reveals **no information** about the plaintext, even to an all-powerful attacker.
- **Computational security**: the ciphertext could theoretically reveal information about the plaintext, but extracting it is **computationally infeasible** with realistic computing power.

Symmetric Cipher Approaches

Two main approaches:

Symmetric Cipher Approaches

Two main approaches:

1. **Stream** ciphers:
   - Inspired by OTP.
   - Given a secret key, generate a byte of stream called *keystream* that has the same length as the message.
   - Encrypt/decrypt bits from x individually using a XOR operation with the keystream (as in OTP).

Symmetric Cipher Approaches

Two main approaches:

1. **Stream** ciphers:
   - Inspired by OTP.
   - Given a secret key, generate a byte of stream called *keystream* that has the same length as the message.
   - Encrypt/decrypt bits from x individually using a XOR operation with the keystream (as in OTP).

2. **Block** ciphers:
   - Split the message x in blocks of fixed size.
   - Encrypt/decrypt each block, then combine the results according to the operation mode.
   - Different *operation mode*: process blocks independently, chain blocks, etc.

Symmetric Cipher Approaches

Two main approaches:

1. **Stream** ciphers:
   - Inspired by OTP.
   - Given a secret key, generate a byte of stream called *keystream* that has the same length as the message.
   - Encrypt/decrypt bits from x individually using a XOR operation with the keystream (as in OTP).

2. **Block** ciphers:
   - Split the message x in blocks of fixed size.
   - Encrypt/decrypt each block, then combine the results according to the operation mode.
   - Different *operation mode*: process blocks independently, chain blocks, etc.

> Modern symmetric encryption algorithms (e.g., **AES**, DES, ...) are built on these two primitives.

Block Ciphers

Block Ciphers

Given:

- A block x_i of the message x of h bits (h is <u>fixed</u> by the block cipher).
- A key k of n bits (n <u>fixed</u> by the block cipher).
- n can be different from h.

Then:

$$x_i \longrightarrow \boxed{E_k(x_i)} \longrightarrow y_i$$

$$y_i \longrightarrow \boxed{D_k(y_i)} \longrightarrow x_i$$

Block Ciphers

Given:

- A block x_i of the message x of h bits (h is <u>fixed</u> by the block cipher).
- A key k of n bits (n <u>fixed</u> by the block cipher).
- n can be different from h.

Then:

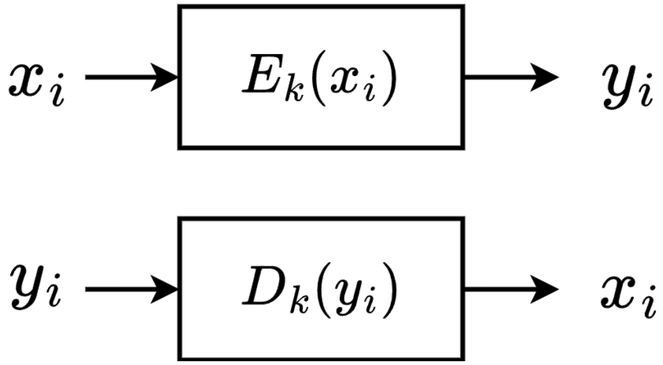

The full plaintext/ciphertext is obtained by combining the processed blocks according to the **mode of operation**.

What if the message is larger than the block size?

Strategy:

1. **Divide** the message into blocks of size h.
2. Use a **mode of operation** to combine the blocks during encryption.

Common modes of operation:

- Electronic Code Block (**ECB**)
- Cipher Block Chaining (**CBC**)
- Counter Mode (**CTR**)
- ...

What if the message is larger than the block size?

Strategy:

1. **Divide** the message into blocks of size h.
2. Use a **mode of operation** to combine the blocks during encryption.

Common modes of operation:

- Electronic Code Block (**ECB**)
- Cipher Block Chaining (**CBC**)
- Counter Mode (**CTR**)
- ...

> Choosing the right mode affects both security and how blocks are processed.

Electronic Code Block (ECB)

IDEA: Encrypt each plaintext block independently, then append them to form the full ciphertext.

Encryption:

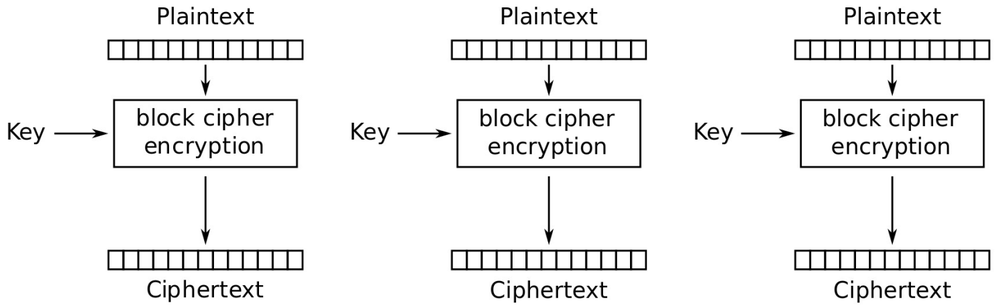

Electronic Codebook (ECB) mode encryption

Decryption:

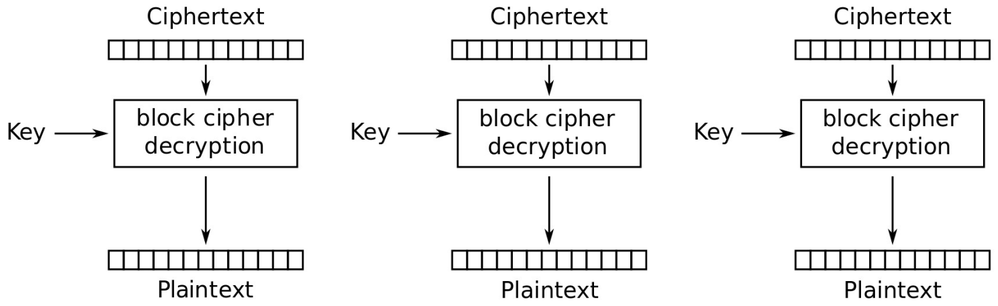

Electronic Codebook (ECB) mode decryption

Notice that:

- $Enc_k(M) = Enc_k(M_1) \parallel Enc_k(M_2) \parallel \ldots \parallel Enc_k(M_n)$
- $Dec_k(C) = Dec_k(C_1) \parallel Dec_k(C_2) \parallel \ldots \parallel Dec_k(C_n)$
- Each block is **treated separately** i.e. there's **no chaining or linking** between blocks.

Electronic Code Block (ECB) - Weakness

Problem:

- Identical plaintext blocks produce identical ciphertext blocks.
- Patterns in the plaintext can **leak through the ciphertext**.

Electronic Code Block (ECB) - Weakness

Problem:

- Identical plaintext blocks produce identical ciphertext blocks.
- Patterns in the plaintext can **leak through the ciphertext**.

```
def ECB_ENC(key, msg):
    blocks = [msg[i:i+16] for i in range(0, len(msg), 16)]
    return b''.join(ENC(key, block) for block in blocks)

K = b'YELLOW SUBMARINE'
M1 = b'16 bytes message'
M2 = b' another 16-b msg'

print(ECB_ENC(K, M1).hex())
#3c19892b47fa369d7301dd1928eb06ca
print(ECB_ENC(K, M2).hex())
#9d28a90864f1f26a7feb218af64dd51a
print(ECB_ENC(K, M1 + M2).hex())
#3c19892b47fa369d7301dd1928eb06ca9d28a90864f1f26a7feb218af64dd51a
```

Electronic Code Block (ECB) - Exploitation

- **Blocks reordering**: the message "Bob transfers $10 to Luca" could be manipulated into "Luca transfers $10 to Bob".
- **Blocks can be replaced, removed, appended**: the message "Transfer $10 to Oscar" could be manipulated into "Transfer $10000 to Oscar".
- **Encrypting the same message twice will generate the same ciphertext**: anyone can detect you are sending the same message twice, which could be a privacy issue!

Electronic Code Block (ECB) - Exploitation

- **Blocks reordering**: the message "Bob transfers $10 to Luca" could be manipulated into "Luca transfers $10 to Bob".
- **Blocks can be replaced, removed, appended**: the message "Transfer $10 to Oscar" could be manipulated into "Transfer $10000 to Oscar".
- **Encrypting the same message twice will generate the same ciphertext**: anyone can detect you are sending the same message twice, which could be a privacy issue!

Example: assume a bank stores account infos like so:

```
#m1 = [USER:RALLI][CREDIT:10€]
c1.hex() = [8f3a91c4e2d6b7a09c5f1e8a42bd7c11][4d9b6e2a7f31c8e5a04b2d6f91aa73ce]

#m2 = [USER:COPPA][CREDIT:1000€]
c2.hex() = [b71c4f2a9e803d6c5a18e29f04db7c92][a3f9c2d8715e04b6cc9a21f8e73d0b44]

#Swap CREDIT block from m2 with CREDIT block from m1

#[USER:RALLI][CREDIT:1000€]
[8f3a91c4e2d6b7a09c5f1e8a42bd7c11][a3f9c2d8715e04b6cc9a21f8e73d0b44]   #jackpot!
```

Cipher Block Chaining (CBC)

IDEA: Each plaintext block is XORed with the previous ciphertext block.

Encryption:

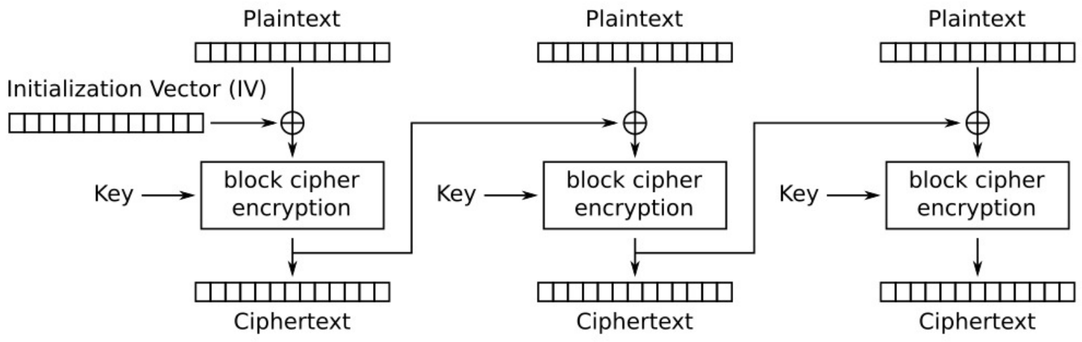

Cipher Block Chaining (CBC) mode encryption

Decryption:

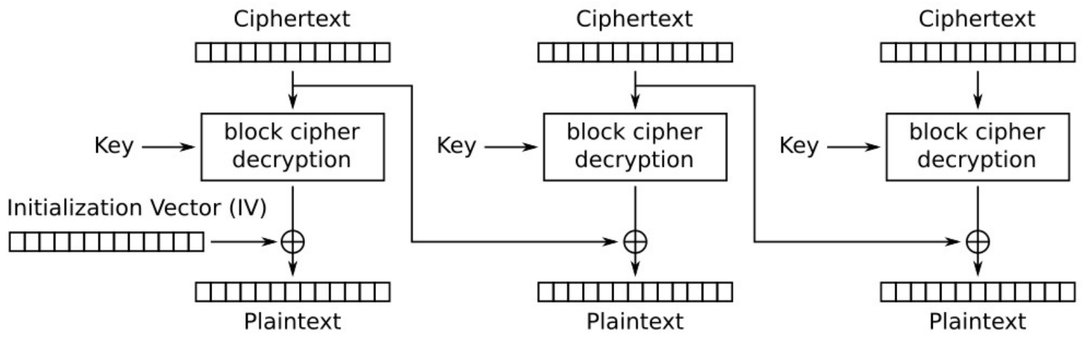

Cipher Block Chaining (CBC) mode decryption

Notice that:

- $Enc_k(M) = Enc_k(M_1 \oplus IV) \parallel Enc_k(M_2 \oplus C_1) \parallel \ldots \parallel Enc_k(M_n \oplus C_{n-1})$
- $Dec_k(C) = Dec_k(C_1) \oplus IV \parallel Dec_k(C_2) \oplus C_1 \parallel \ldots \parallel Dec_k(C_n) \oplus C_{n-1}$
- A **random IV initializes the chaining**, causing each block to influence the next.

Cipher Block Chaining (CBC) - Weaknesses

Bit flipping: flipping (changing) a bit in a ciphertext block...

- completely corrupts the corresponding plaintext block;
- flips the same bit in the next plaintext block.

This allows **controlled modifications** of the decrypted message (**malleability**).

Cipher Block Chaining (CBC) - Weaknesses

Bit flipping: flipping (changing) a bit in a ciphertext block...

- completely corrupts the corresponding plaintext block;
- flips the same bit in the next plaintext block.

This allows **controlled modifications** of the decrypted message (**malleability**).

Initialization Vector (IV) requirements:

- It must be **random**, and **never reused** with the same key.
- Reusing it can lead to information leakage about the first plaintext block.
- It must be **authenticated**, otherwise attackers can modify it to control the first plaintext block.

Cipher Block Chaining (CBC) - Exploitation

Assumptions:

- The **IV** is **prepended to the ciphertext** and sent to the user: $ciphertext = IV \parallel C_1 \parallel C_2 \parallel \ldots$
- CBC is used **without authentication**.

Cipher Block Chaining (CBC) - Exploitation

Assumptions:

- The **IV** is **prepended to the ciphertext** and sent to the user: $ciphertext = IV \parallel C_1 \parallel C_2 \parallel \ldots$
- CBC is used **without authentication**.

Observations:

- First step in CBC's decryption algorithm: $Dec_k(C) = (Dec_k(C_1) \oplus IV) = M_1$
- The attacker has control over the IV => by flipping selected bits of the IV, they can **predictably modify the first plaintext block**.

Cipher Block Chaining (CBC) - Exploitation

Assumptions:

- The **IV** is **prepended to the ciphertext** and sent to the user: $ciphertext = IV \parallel C_1 \parallel C_2 \parallel \ldots$
- CBC is used **without authentication**.

Observations:

- First step in CBC's decryption algorithm: $Dec_k(C) = (Dec_k(C_1) \oplus IV) = M_1$
- The attacker has control over the IV => by flipping selected bits of the IV, they can **predictably modify the first plaintext block**.

Example: suppose the attacker wants to change the first bit m of plaintext message M into a desired bit m'...

$$IV' = IV \oplus m \oplus m'$$

$$Dec_k(C) = (Dec_k(C_1) \oplus IV') \mid \cdots = (Dec_k(C_1) \oplus IV \oplus m \oplus m') \mid \ldots$$

$$= (M_1 \oplus m \oplus m') \mid \cdots = (M') \mid \ldots$$

Result: the decrypted message M' is identical to M, **except for the first bit** which is changed from m to m'.

Counter Mode (CTR)

IDEA: Like OTP, but each block uses a different key derived from nonce + counter.

Encryption:

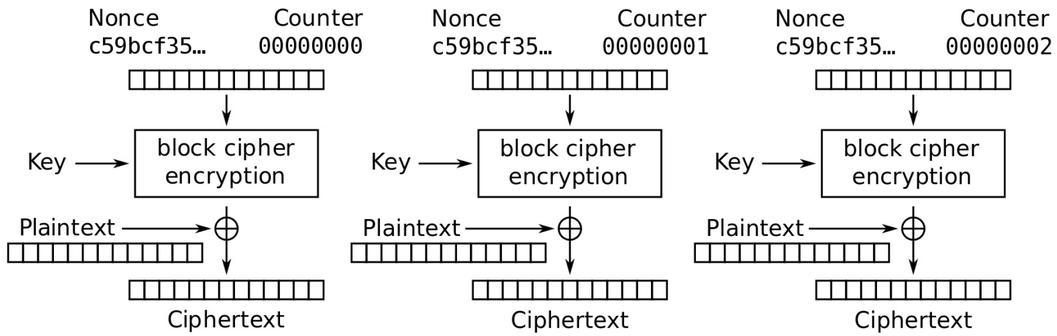

Counter (CTR) mode encryption

Decryption:

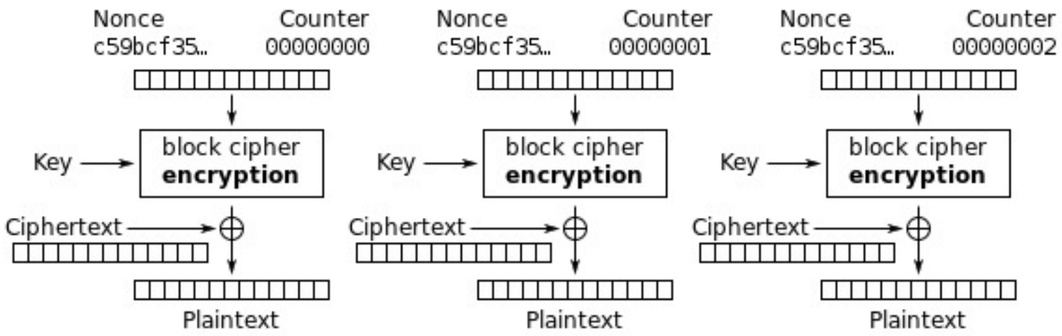

Counter (CTR) mode decryption

Notice that:

- $Enc_k(M) = (M_1 \oplus Enc_k(\text{nonce}|0)) \mid (M_2 \oplus Enc_k(\text{nonce}|1)) \mid \ldots \mid (M_n \oplus Enc_k(\text{nonce}|n))$
- $Dec_k(C) = (C_1 \oplus Enc_k(\text{nonce}|0)) \mid (C_2 \oplus Enc_k(\text{nonce}|1)) \mid \ldots \mid (C_n \oplus Enc_k(\text{nonce}|n))$
- nonce + counter generate a **keystream**, which is then **XORed with each block independently**.

Counter Mode (CTR) - Weaknesses

Nonce requirements:

- Must be **unique** for every encryption under the same key.
- Reusing a nonce causes **keystream reuse**, leaking relationships between plaintexts.

Counter Mode (CTR) - Weaknesses

Nonce requirements:

- Must be **unique** for every encryption under the same key.
- Reusing a nonce causes **keystream reuse**, leaking relationships between plaintexts.

Counter requirements:

- Must **change for every block**.
- Must **never repeat** within the same encryption.
- A static or repeating counter breaks keystream uniqueness.

Counter Mode (CTR) - Weaknesses

Nonce requirements:

- Must be **unique** for every encryption under the same key.
- Reusing a nonce causes **keystream reuse**, leaking relationships between plaintexts.

Counter requirements:

- Must **change for every block**.
- Must **never repeat** within the same encryption.
- A static or repeating counter breaks keystream uniqueness.

> If both nonce and counter are static, CTR **degenerates into OTP with key reuse**.

Counter Mode (CTR) - Exploitation

Malleability (Bit-Flipping)

- Each step in CTR decryption is $M_i = C_i \oplus Enc_k(\text{nonce}|i)$
- Attacker can flip a bit in the ciphertext: $C'_i = C_i \oplus \Delta \quad \text{where} \quad \Delta = m \oplus m'$
- Decryption: $M'_i = C'_i \oplus Enc_k(\text{nonce}|i) = C_i \oplus \Delta \oplus Enc_k(\text{nonce}|i) = M_i \oplus \Delta$

Result: the decrypted message M' is identical to M except for the **bit m being changed into m'**.

Counter Mode (CTR) - Exploitation

Malleability (Bit-Flipping)

- Each step in CTR decryption is $M_i = C_i \oplus Enc_k(\text{nonce}|i)$
- Attacker can flip a bit in the ciphertext: $C_i' = C_i \oplus \Delta \quad \text{where} \quad \Delta = m \oplus m'$
- Decryption: $M_i' = C_i' \oplus Enc_k(\text{nonce}|i) = C_i \oplus \Delta \oplus Enc_k(\text{nonce}|i) = M_i \oplus \Delta$

Result: the decrypted message M' is identical to M except for the **bit m being changed into m'**.

Nonce Reuse

- Given two messages encrypted with the same nonce:

$$C_i = M_i \oplus Enc_k(\text{nonce}|i)$$

$$C_i' = M_i' \oplus Enc_k(\text{nonce}|i)$$

- Attacker can compute: $C_i \oplus C_i' = M_i \oplus Enc_k(\text{nonce}|i) \oplus M_i' \oplus Enc_k(\text{nonce}|i) = M_i \oplus M_i'$

Result: the attacker can use **cribbing/frequency analysis** to reconstruct the plaintext.

Advanced Encryption Standard (AES)

> The most widely used symmetric encryption algorithm in modern cryptography,

Characteristics:

- Block size: **16 bytes**.
- Key lengths: 128, 192, or 256 bits.

It implements modes of operations:

- MODE_ECB
- MODE_CBC
- MODE_CTR
- ...

AES in Python

Installation: `pip install pycryptodome`

```
from Crypto.Cipher import AES

cipher = AES.new(KEY, AES.MODE_CBC, IV)
cipher.encrypt(data)
```

If the data length isn't a multiple of 16 bytes, **it must be padded**.

```
from Crypto.Util.Padding import pad, unpad

padded_data = pad(data, 16)
cipher.encrypt(padded_data)
```

AES in Python

AES **ECB_MODE** implementation:

```
def encrypt_ecb(plaintext):
    cipher = AES.new(key, AES.MODE_ECB)
    ciphertext = cipher.encrypt(pad(data, AES.block_size))
    return ciphertext.hex()
```

AES **CBC_MODE** implementation:

```
def encrypt_cbc(plaintext):
    iv = get_random_bytes(16)
    cipher = AES.new(key, AES.MODE_CBC, iv)
    ciphertext = cipher.encrypt(pad(data, AES.block_size))
    return iv, ciphertext.hex()
```

AES **CTR_MODE** implementation

```
def encrypt_ctr(plaintext):
    nonce = get_random_bytes(8)
    cipher = AES.new(KEY, AES.MODE_CTR, nonce=nonce)
    ciphertext = cipher.encrypt(plaintext.encode())
    return ciphertext.hex()
```

Time to Cook

Entropy Vault II

Crypto Challenge 04

Entropy Vault II - Reconnaissance

EntropyVault2 (500 points) crypto

New cipher, old habits.

https://crypto04.webhack.it

Flag

Submit

What can we observe? The challenge...

- claims to use **AES-CTR** encryption;
- provides an **encryption oracle** for user-chosen messages;
- allows us to **retrieve the encrypted flag**.

Entropy Vault II - Hypothesis

```python
#fixed nonce (set globally once)
NONCE = os.getenv("NONCE", "noncenon").encode()

def encrypt(plaintext):
    try:
        cipher = AES.new(KEY, AES.MODE_CTR, nonce=NONCE)
        ciphertext = cipher.encrypt(plaintext.encode())
        return ciphertext.hex()
    except Exception as e:
        print(f"Encryption error: {e}")
        return None
```

Entropy Vault II - Hypothesis

```python
#fixed nonce (set globally once)
NONCE = os.getenv("NONCE", "noncenon").encode()

def encrypt(plaintext):
    try:
        cipher = AES.new(KEY, AES.MODE_CTR, nonce=NONCE)
        ciphertext = cipher.encrypt(plaintext.encode())
        return ciphertext.hex()
    except Exception as e:
        print(f"Encryption error: {e}")
        return None
```

Nonce reuse in AES-CTR causes keystream reuse, effectively **turning it into a OTP with key reuse**.

Entropy Vault II - Hypothesis

```python
#fixed nonce (set globally once)
NONCE = os.getenv("NONCE", "noncenon").encode()

def encrypt(plaintext):
    try:
        cipher = AES.new(KEY, AES.MODE_CTR, nonce=NONCE)
        ciphertext = cipher.encrypt(plaintext.encode())
        return ciphertext.hex()
    except Exception as e:
        print(f"Encryption error: {e}")
        return None
```

Nonce reuse in AES-CTR causes keystream reuse, effectively **turning it into a OTP with key reuse**.

We can encrypt an **arbitrary number** of messages.

Entropy Vault II - Exploitation

1. **Encrypt a known plaintext** by submitting a message to the encryption oracle.

2. **Extract the key** by XOR-ing the known plaintext with the recovered ciphertext:

```
ciphertext ⊕ plaintext = key
```

3. **Decrypt the flag** by XOR-ing the encrypted flag with the recovered key:

```
encrypted_flag ⊕ key = flag
```

Entropy Vault II - Exploitation

1. **Encrypt a known plaintext** by submitting a message to the encryption oracle.

2. **Extract the key** by XOR-ing the known plaintext with the recovered ciphertext:

```
ciphertext ⊕ plaintext = key
```

3. **Decrypt the flag** by XOR-ing the encrypted flag with the recovered key:

```
encrypted_flag ⊕ key = flag
```

NOTE: the plaintext must be **long enough** to generate a key that covers the full encrypted flag.

ECBuy

Crypto Challenge 05

ECBuy - Reconnaissance

ECBuy (500 points) crypto

Blocks don't lie. But they do move.

https://crypto05.webhack.it

Flag

Submit

What can we observe?

- Registration grants a **$10 voucher**.
- There's a shop section that includes the flag.
- Each shop item has an **associated verification token** (displayed in the **view details** pop-up).

ECBuy - Hypothesis

The voucher consists of **two padded 16-byte blocks** in the format [USER:username][CREDIT:amount], encrypted with **AES-ECB**.

```
def create_voucher(username, amount):
    #USER:name____ CREDIT:amount___
    user_block = f"USER:{username}".ljust(16, '_')
    credit_block = f"CREDIT:{amount}".ljust(16, '_')
    return aes_ecb_encrypt(user_block + credit_block)
```

ECBuy - Hypothesis

The voucher consists of **two padded 16-byte blocks** in the format [USER:username][CREDIT:amount], encrypted with **AES-ECB**.

```
def create_voucher(username, amount):
    #USER:name____ CREDIT:amount___
    user_block = f"USER:{username}".ljust(16, '_')
    credit_block = f"CREDIT:{amount}".ljust(16, '_')
    return aes_ecb_encrypt(user_block + credit_block)
```

The verification token consists of **two padded 16-byte blocks** in the format [ITEM:name][CREDIT:amount], encrypted with AES-ECB.

```
def create_item_token(item_name, price):
    clean_name = ''.join(c for c in item_name if ord(c) < 128).strip()[:10]
    #ITEM:name______ CREDIT:price____
    item_block = f"ITEM:{clean_name}".ljust(16, '_')
    credit_block = f"CREDIT:{price}".ljust(16, '_')
    return aes_ecb_encrypt(item_block + credit_block)
```

ECBuy - Hypothesis

The voucher consists of **two padded 16-byte blocks** in the format [USER:username][CREDIT:amount], encrypted with **AES-ECB**.

```
def create_voucher(username, amount):
    #USER:name____ CREDIT:amount___
    user_block = f"USER:{username}".ljust(16, '_')
    credit_block = f"CREDIT:{amount}".ljust(16, '_')
    return aes_ecb_encrypt(user_block + credit_block)
```

The verification token consists of **two padded 16-byte blocks** in the format [ITEM:name][CREDIT:amount], encrypted with AES-ECB.

```
def create_item_token(item_name, price):
    clean_name = ''.join(c for c in item_name if ord(c) < 128).strip()[:10]
    #ITEM:name______ CREDIT:price____
    item_block = f"ITEM:{clean_name}".ljust(16, '_')
    credit_block = f"CREDIT:{price}".ljust(16, '_')
    return aes_ecb_encrypt(item_block + credit_block)
```

Both voucher and verification token **share a 16-bytes block** that determines the amount.

ECBuy - Exploitation

1. **Register** with any username.

2. **Retrieve** both the generated voucher (without using it) and the verification token of the flag item.

3. **Swap** the last block of the voucher with the last block of the verification token.

```
#Example: username 'lralli'

#Voucher: [USER:lralli______][CREDIT:10_______]
#Verification token: [ITEM:flag________][CREDIT:10000____]

#Swap: [USER:lralli______][CREDIT:10000____]
```

4. **Redeem** the new token and buy the flag.

ChainReaction

Crypto Challenge 06

ChainReaction - Reconnaissance

ChainReaction (500 points) crypto

One flip to ruin them all.

https://crypto06.webhack.it

Flag

Submit

What can we observe?

- The NFT shop lists items, each with an **associated owner**.
- Registering a user returns an **encrypted login token**.
- Login requires providing a valid token to authenticate.

ChainReaction - Hypothesis

```
#fixed IV (set globally once)
IV = os.urandom(16)

...

def encrypt_token(username):
    padded_username = pad(username.encode(), AES.block_size)
    cipher = AES.new(KEY, AES.MODE_CBC, IV)
    ciphertext = cipher.encrypt(padded_username)
    return (IV + ciphertext).hex()
```

ChainReaction - Hypothesis

```
#fixed IV (set globally once)
IV = os.urandom(16)

...

def encrypt_token(username):
    padded_username = pad(username.encode(), AES.block_size)
    cipher = AES.new(KEY, AES.MODE_CBC, IV)
    ciphertext = cipher.encrypt(padded_username)
    return (IV + ciphertext).hex()
```

The fixed IV makes the produced token **malleable**, enabling **bit-flip attacks**.

ChainReaction - Exploitation

1. **Register** with username xralli, where x can be any character but 'l' (as lralli is already registered).

2. **Retrieve** the IV from the produced login token

```
IV = token[:BLOCK_SIZE]  #as token = IV + ciphertext
```

3. **Bit-flip** the first byte of the IV with the Δ needed to login as lralli:

```
new_token = old_token ⊕ ord('x') ⊕ ord('l')

#x = char picked in step 1
```

4. **Login** with the forged token and view the legendary NFT details to obtain the flag.