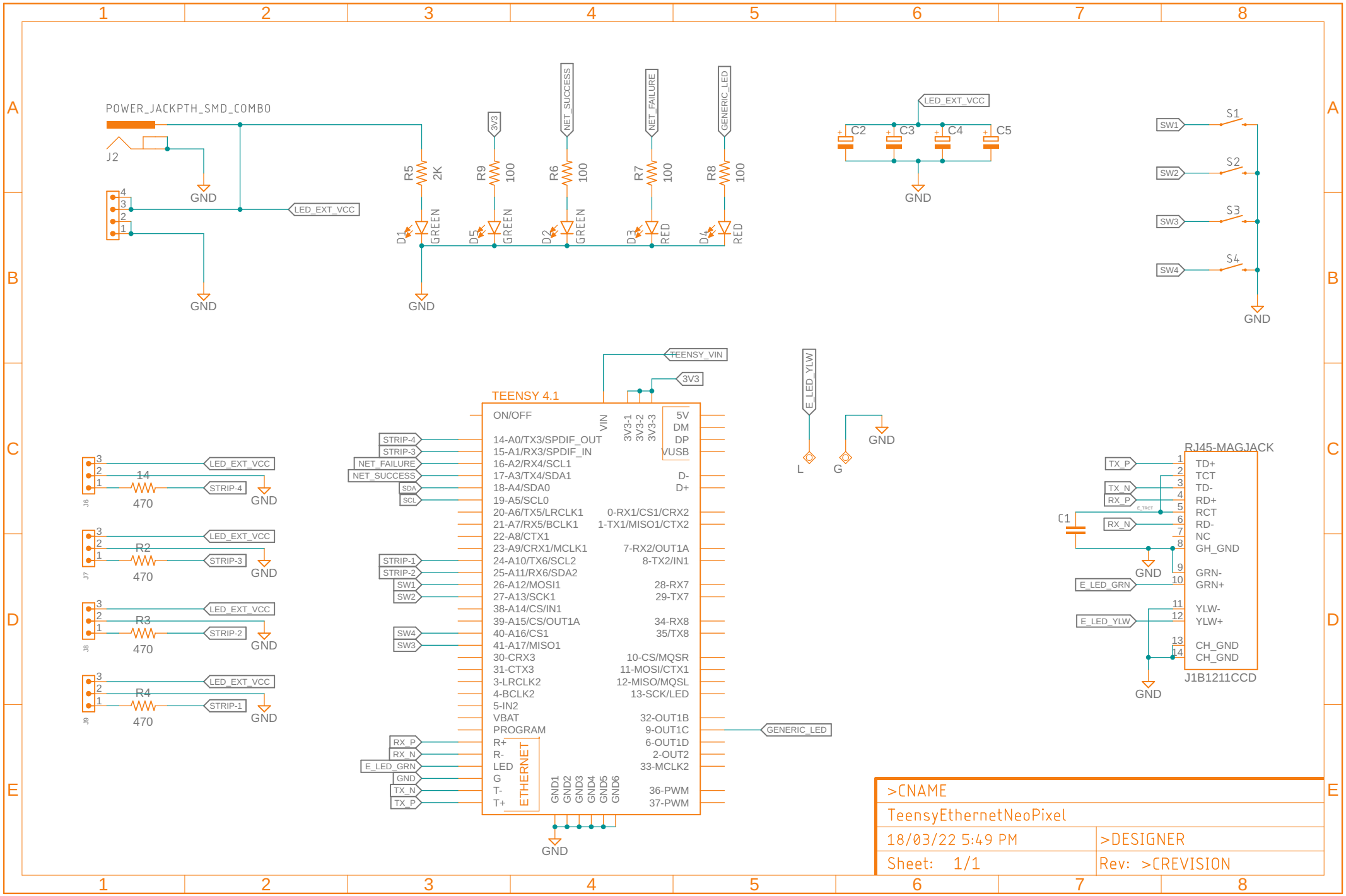
POWER_JACKPTH_SMD_COMBO
J2
GND
LED_EXT_VCC
R5 2K
R9 100
R6 100
R7 100
R8 100
3V3
NET_SUCCESS
NET_FAILURE
GENERIC_LED
D1 GREEN
D5 GREEN
D2 GREEN
D3 RED
D4 RED
C2
C3
C4
C5
S1
S2
S3
S4
SW1
SW2
SW3
SW4
TEENSY 4.1
TEENSY_VIN
ON/OFF
VIN
3V3-1
3V3-2
3V3-3
5V
DM
DP
VUSB
14-A0/TX3/SPDIF_OUT
15-A1/RX3/SPDIF_IN
16-A2/RX4/SCL1
17-A3/TX4/SDA1
18-A4/SDA0
19-A5/SCL0
20-A6/TX5/LRCLK1
21-A7/RX5/BCLK1
22-A8/CTX1
23-A9/CRX1/MCLK1
24-A10/TX6/SCL2
25-A11/RX6/SDA2
26-A12/MOSI1
27-A13/SCK1
38-A14/CS/IN1
39-A15/CS/OUT1A
40-A16/CS1
41-A17/MISO1
30-CRX3
31-CTX3
3-LRCLK2
4-BCLK2
5-IN2
VBAT
PROGRAM
D-
D+
0-RX1/CS1/CRX2
1-TX1/MISO1/CTX2
7-RX2/OUT1A
8-TX2/IN1
28-RX7
29-TX7
34-RX8
35/TX8
10-CS/MQSR
11-MOSI/CTX1
12-MISO/MQSL
13-SCK/LED
32-OUT1B
9-OUT1C
6-OUT1D
2-OUT2
33-MCLK2
36-PWM
37-PWM
R+
R-
LED
G
T-
T+
ETHERNET
GND1
GND2
GND3
GND4
GND5
GND6
STRIP-4
STRIP-3
NET_FAILURE
NET_SUCCESS
SDA
SCL
STRIP-1
STRIP-2
SW1
SW2
SW4
SW3
RX_P
RX_N
E_LED_GRN
GND
TX_N
TX_P
GENERIC_LED
E_LED_YLW
L
G
J6
J7
J8
J9
R2
R3
R4
470
RJ45-MAGJACK
TD+
TCT
TD-
RD+
RCT
RD-
NC
GH_GND
GRN-
GRN+
YLW-
YLW+
CH_GND
CH_GND
C1
J1B1211CCD
>CNAME
TeensyEthernetNeoPixel
18/03/22 5:49 PM
>DESIGNER
Sheet: 1/1
Rev: >CREVISION