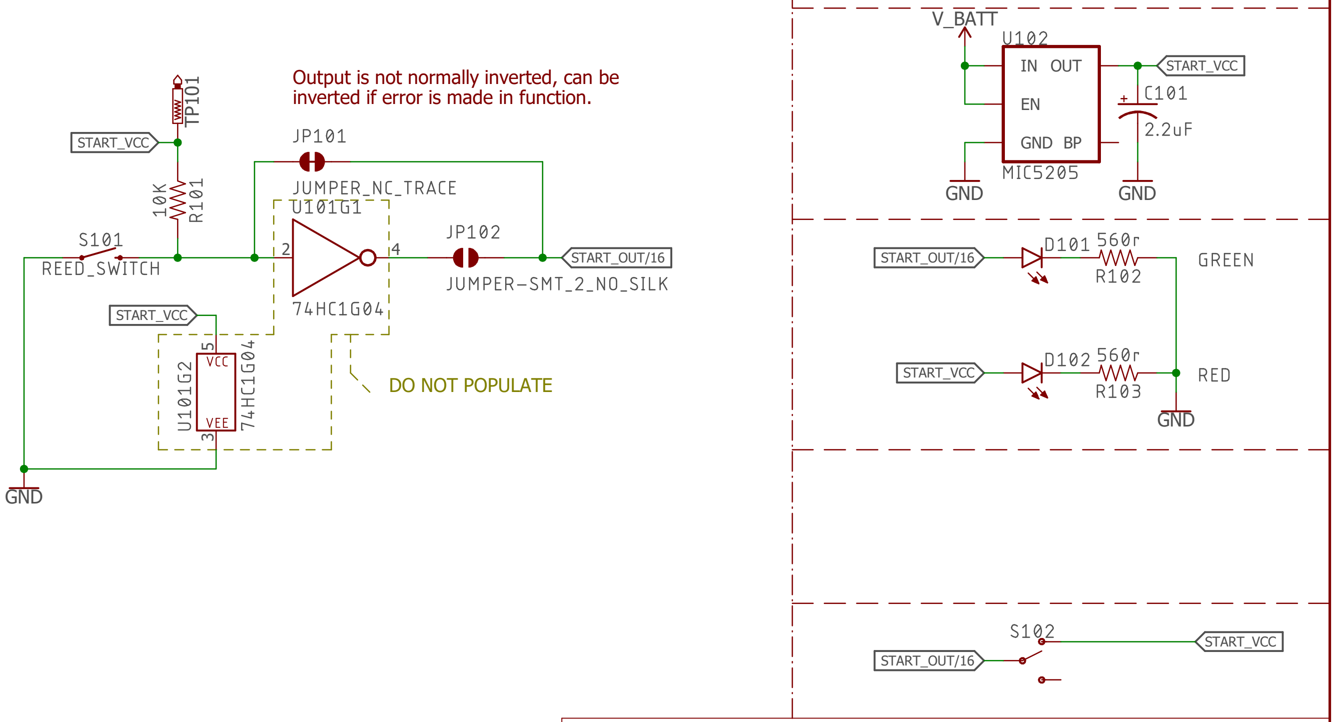
Output is not normally inverted, can be inverted if error is made in function.
TP101
START_VCC
10K
R101
S101
REED_SWITCH
JP101
JUMPER_NC_TRACE
U101G1
2
4
74HC1G04
JP102
JUMPER-SMT_2_NO_SILK
START_OUT/16
START_VCC
5
VCC
VEE
3
U101G2
74HC1G04
DO NOT POPULATE
GND
V_BATT
U102
IN
OUT
EN
GND
BP
MIC5205
START_VCC
C101
2.2uF
GND
GND
START_OUT/16
D101
560r
R102
GREEN
START_VCC
D102
560r
R103
RED
GND
S102
START_OUT/16
START_VCC

A reed switch is released by a magnet. The switch outputs a signal to begin the next transfer.

"Participants must detach and remove a magnet from the device; this action of detaching the magnet must begin the chain of events due to the removal of the magnetic force."

STARTING ACTION

TITLE: WMHS Eastern LI Invitational Circuit Board
Document Number:
REV:
Date: not saved!
Sheet: 1/16

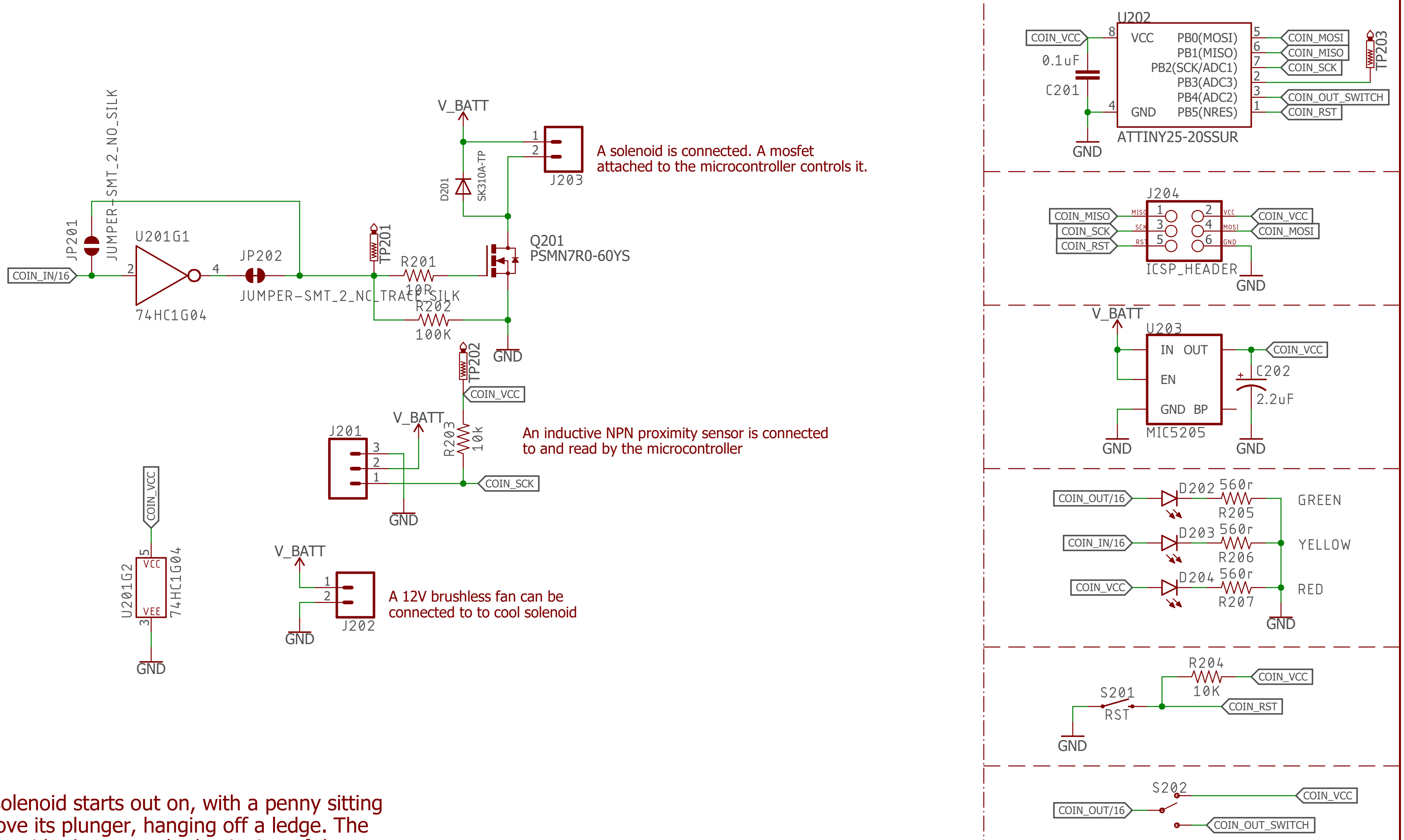
JP201
JUMPER-SMT_2_NO_SILK
COIN_IN/16
U201G1
74HC1G04
JP202
JUMPER-SMT_2_NC_TRACE_SILK
TP201
R201
10R
R202
100K
V_BATT
D201
SK310A-TP
J203
Q201
PSMN7R0-60YS
GND
TP202
COIN_VCC
J201
R203
10k
COIN_SCK
U201G2
74HC1G04
VCC
VEE
J202
U202
ATTINY25-20SSUR
VCC
GND
PB0(MOSI)
PB1(MISO)
PB2(SCK/ADC1)
PB3(ADC3)
PB4(ADC2)
PB5(NRES)
0.1uF
C201
COIN_MOSI
COIN_MISO
COIN_SCK
COIN_OUT_SWITCH
COIN_RST
TP203
J204
ICSP_HEADER
MISO
SCK
RST
VCC
MOSI
U203
MIC5205
IN
OUT
EN
GND
BP
C202
2.2uF
COIN_OUT/16
D202
560r
R205
GREEN
D203
R206
YELLOW
D204
R207
RED
R204
10K
S201
RST
S202

A solenoid is connected. A mosfet attached to the microcontroller controls it.

An inductive NPN proximity sensor is connected to and read by the microcontroller

A 12V brushless fan can be connected to cool solenoid

A solenoid starts out on, with a penny sitting above its plunger, hanging off a ledge. The solenoid releases at the beginning of the transfer, flipping the penny airborne. The penny triggers an inductive proximity sensor which is connected to a microcontroller that triggers the next action.

"Flip an unmodified US quarter airborne so that it goes from heads up to tails up and begins the next action."

COIN FLIP ACTION

TITLE: WMHS Eastern LI Invitational Circuit Board

Document Number:

REV:

Date: not saved!

Sheet: 2/16

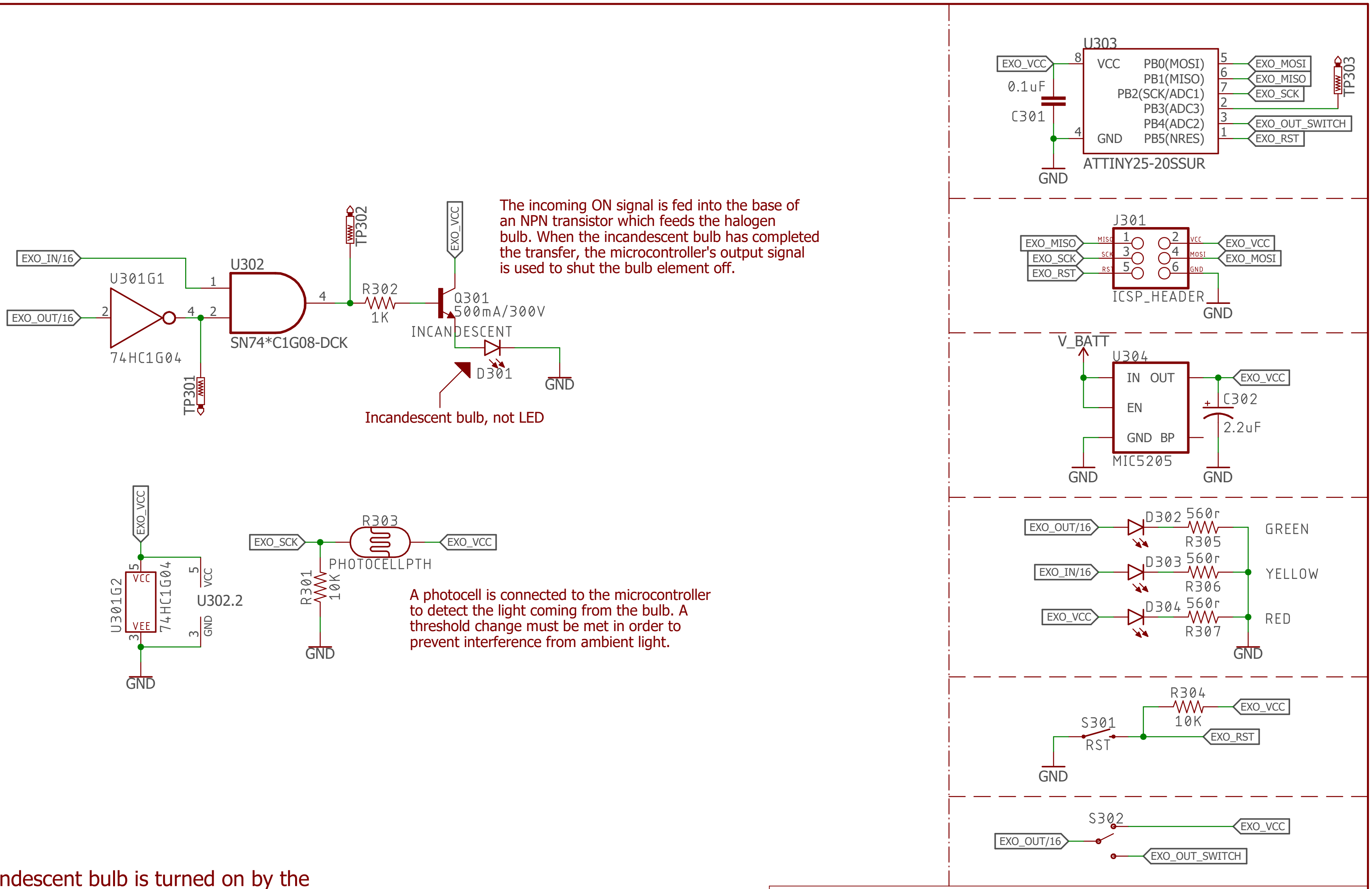
U303
EXO_VCC
8
VCC
PB0(MOSI)
PB1(MISO)
PB2(SCK/ADC1)
PB3(ADC3)
PB4(ADC2)
PB5(NRES)
GND
4
5
6
7
2
3
1
EXO_MOSI
EXO_MISO
EXO_SCK
EXO_OUT_SWITCH
EXO_RST
TP303
0.1uF
C301
GND
ATTINY25-20SSUR
J301
EXO_MISO
EXO_SCK
EXO_RST
MISO
SCK
RST
1
2
3
4
5
6
VCC
MOSI
GND
EXO_VCC
EXO_MOSI
ICSP_HEADER
GND
V_BATT
U304
IN
OUT
EN
GND
BP
MIC5205
EXO_VCC
C302
2.2uF
GND
GND
EXO_OUT/16
D302
560r
R305
GREEN
EXO_IN/16
D303
560r
R306
YELLOW
EXO_VCC
D304
560r
R307
RED
GND
R304
10K
EXO_VCC
S301
RST
EXO_RST
GND
S302
EXO_VCC
EXO_OUT/16
EXO_OUT_SWITCH
TP302
EXO_VCC
EXO_IN/16
U302
1
U301G1
EXO_OUT/16
2
4
2
4
74HC1G04
SN74*C1G08-DCK
TP301
R302
1K
Q301
500mA/300V
INCANDESCENT
D301
GND
EXO_VCC
U301G2
VCC
VEE
5
3
74HC1G04
5
VCC
U302.2
3
GND
GND
R303
EXO_SCK
EXO_VCC
PHOTOCELLPTH
R301
10K
GND

The incoming ON signal is fed into the base of an NPN transistor which feeds the halogen bulb. When the incandescent bulb has completed the transfer, the microcontroller's output signal is used to shut the bulb element off.

Incandescent bulb, not LED

A photocell is connected to the microcontroller to detect the light coming from the bulb. A threshold change must be met in order to prevent interference from ambient light.

An incandescent bulb is turned on by the previous transfer and turned off by the output of the transfer. The microcontroller turns on the output when the photocell resistance drops a certain amount.

"Use an exothermic action that produces light to activate a photocell and begins the next action."

EXOTHERMIC ACTION

TITLE: WMHS Eastern LI Invitational Circuit Board

Document Number:

REV:

Date: not saved!

Sheet: 3/16

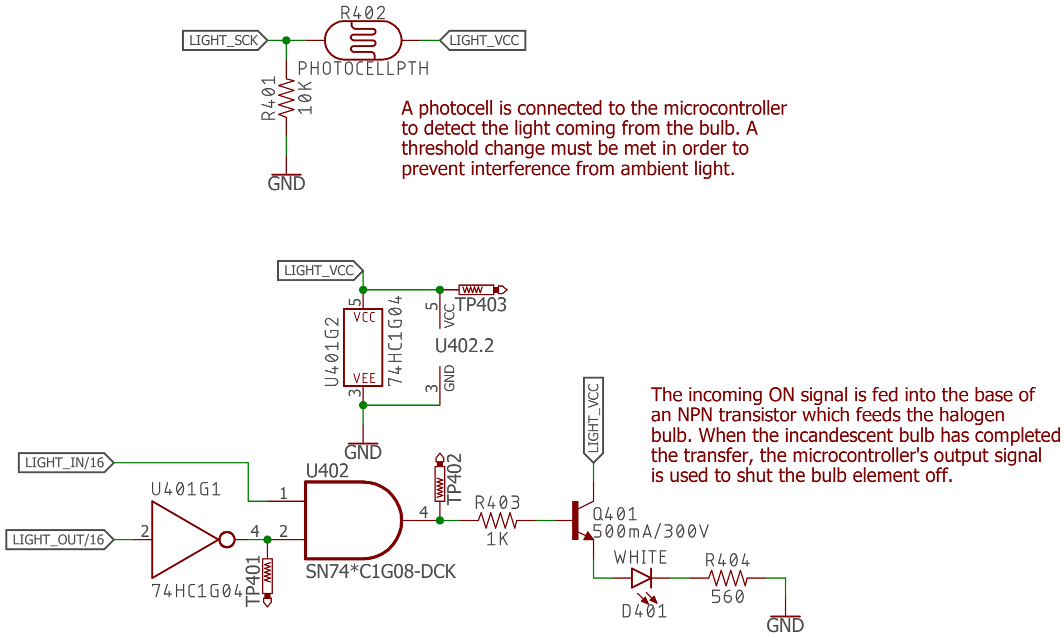
R402
LIGHT_SCK
LIGHT_VCC
PHOTOCELLPTH
R401
10K
GND
LIGHT_VCC
TP403
5
VCC
U402.2
3
GND
U401G2
VCC
VEE
74HC1G04
5
3
GND
LIGHT_VCC
LIGHT_IN/16
U401G1
1
U402
TP402
R403
1K
4
Q401
500mA/300V
LIGHT_OUT/16
2
4
2
74HC1G04
TP401
SN74*C1G08-DCK
WHITE
R404
560
D401
GND

A photocell is connected to the microcontroller to detect the light coming from the bulb. A threshold change must be met in order to prevent interference from ambient light.

The incoming ON signal is fed into the base of an NPN transistor which feeds the halogen bulb. When the incandescent bulb has completed the transfer, the microcontroller's output signal is used to shut the bulb element off.

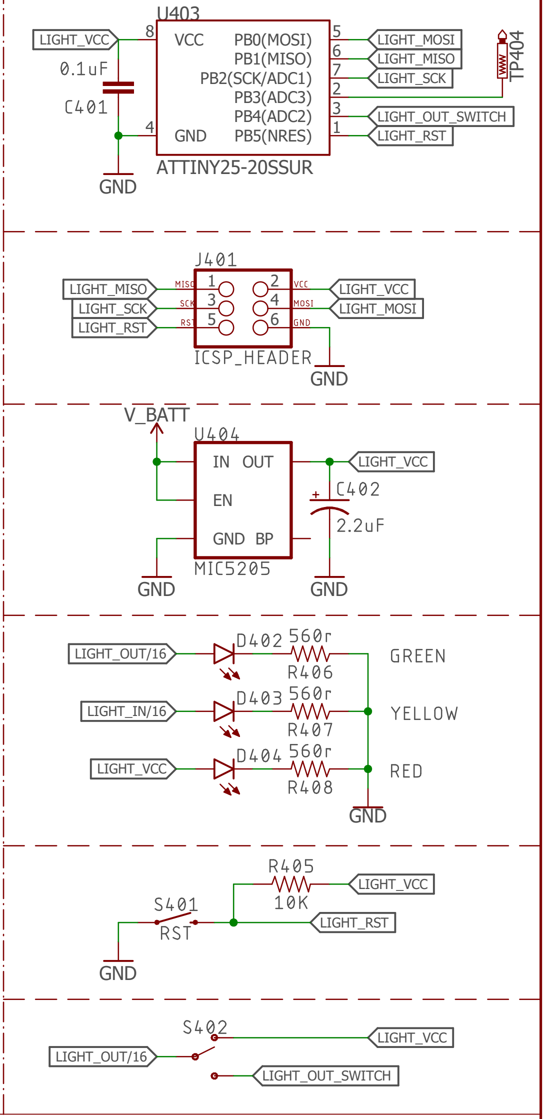
U403
LIGHT_VCC
8
VCC
0.1uF
C401
4
GND
GND
PB0(MOSI)
PB1(MISO)
PB2(SCK/ADC1)
PB3(ADC3)
PB4(ADC2)
PB5(NRES)
5
6
7
2
3
1
LIGHT_MOSI
LIGHT_MISO
LIGHT_SCK
LIGHT_OUT_SWITCH
LIGHT_RST
TP404
ATTINY25-20SSUR
J401
LIGHT_MISO
LIGHT_SCK
LIGHT_RST
MISO
SCK
RST
1
3
5
2
4
6
VCC
MOSI
GND
LIGHT_VCC
LIGHT_MOSI
ICSP_HEADER
GND
V_BATT
U404
IN
OUT
EN
GND
BP
LIGHT_VCC
C402
2.2uF
MIC5205
GND
GND
LIGHT_OUT/16
D402
560r
R406
GREEN
LIGHT_IN/16
D403
560r
R407
YELLOW
LIGHT_VCC
D404
560r
R408
RED
GND
R405
10K
LIGHT_VCC
S401
RST
LIGHT_RST
GND
S402
LIGHT_VCC
LIGHT_OUT/16
LIGHT_OUT_SWITCH

An LED is turned on by the previous action.
The LED makes the phototransistor change
its resistance, signaling the microcontroller
to proceed to the next action. The output signal
turns the LED off again.

"Use light to initiate a chemical reaction to
begin the next action."

CLARIFICATION:
"Use light to initiate the next action."

LIGHT TRIGGERED ACTION

TITLE: WMHS Eastern LI Invitational Circuit Board

Document Number:

REV:

Date: not saved!

Sheet: 4/16

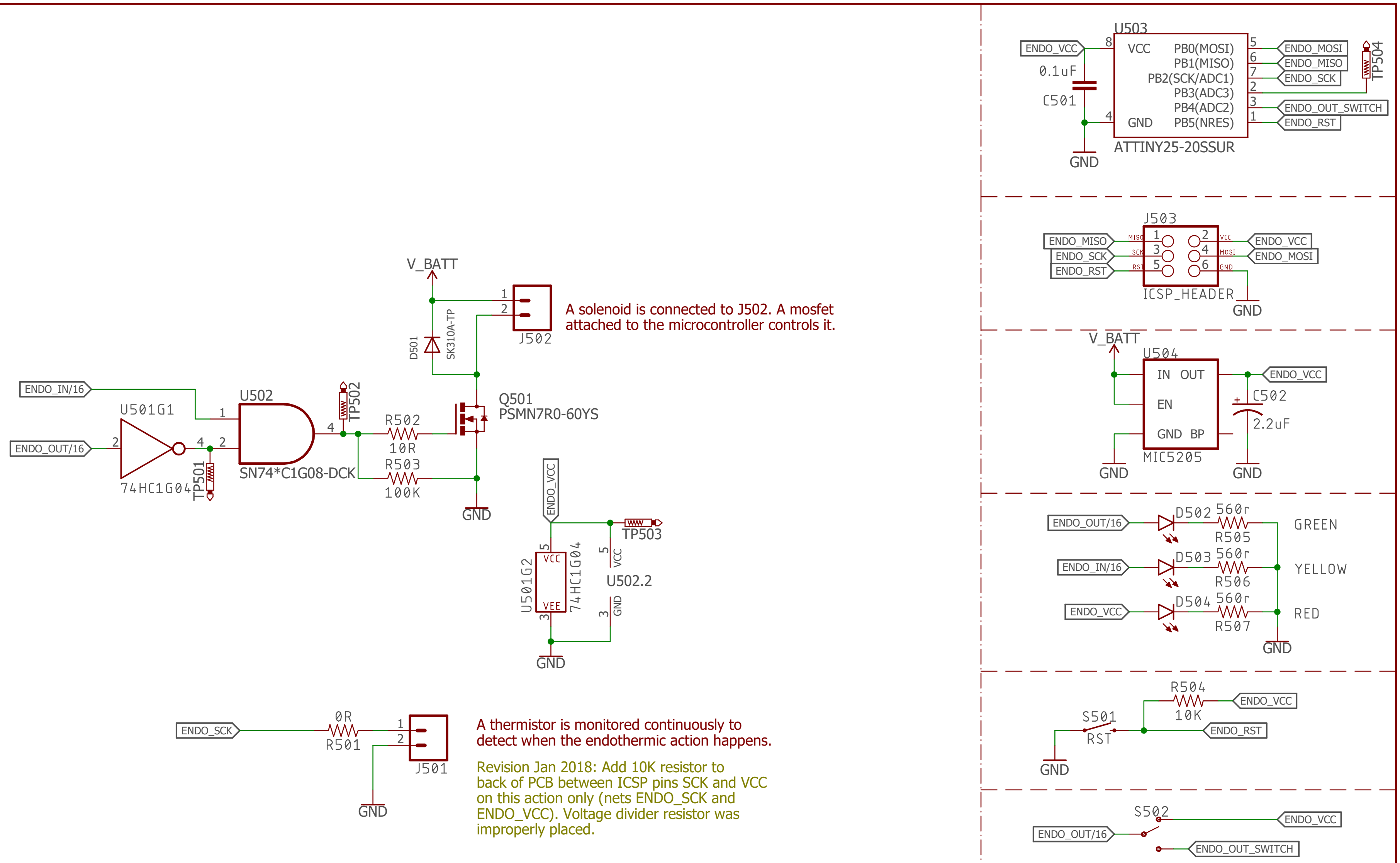
ENDO_IN/16
ENDO_OUT/16
U501G1
74HC1G04
TP501
U502
SN74*C1G08-DCK
TP502
R502
10R
R503
100K
V_BATT
D501
SK310A-TP
J502
Q501
PSMN7R0-60YS
GND
ENDO_VCC
TP503
U501G2
74HC1G04
VCC
VEE
U502.2
VCC
GND
ENDO_SCK
0R
R501
J501
GND
U503
VCC
GND
PB0(MOSI)
PB1(MISO)
PB2(SCK/ADC1)
PB3(ADC3)
PB4(ADC2)
PB5(NRES)
ATTINY25-20SSUR
0.1uF
C501
ENDO_MOSI
ENDO_MISO
ENDO_SCK
ENDO_OUT_SWITCH
ENDO_RST
TP504
J503
ICSP_HEADER
MISO
SCK
RST
VCC
MOSI
GND
V_BATT
U504
IN
OUT
EN
GND
BP
MIC5205
C502
2.2uF
ENDO_VCC
D502
560r
R505
GREEN
D503
560r
R506
YELLOW
D504
560r
R507
RED
R504
10K
S501
RST
ENDO_RST
S502
ENDO_OUT_SWITCH

A solenoid is connected to J502. A mosfet attached to the microcontroller controls it.

A thermistor is monitored continuously to detect when the endothermic action happens.

Revision Jan 2018: Add 10K resistor to back of PCB between ICSP pins SCK and VCC on this action only (nets ENDO_SCK and ENDO_VCC). Voltage divider resistor was improperly placed.

A solenoid dunks a thermistor into a container of ice water. The endothermic action of heat being transferred from the thermistor casing to the water is detected by the microcontroller which begins the next action.

"Use an endothermic action that begins the next action as a result of the reduction in temperature."

ENDOTHERMIC ACTION

TITLE: WMHS Eastern LI Invitational Circuit Board

Document Number:

REV:

Date: not saved!

Sheet: 5/16

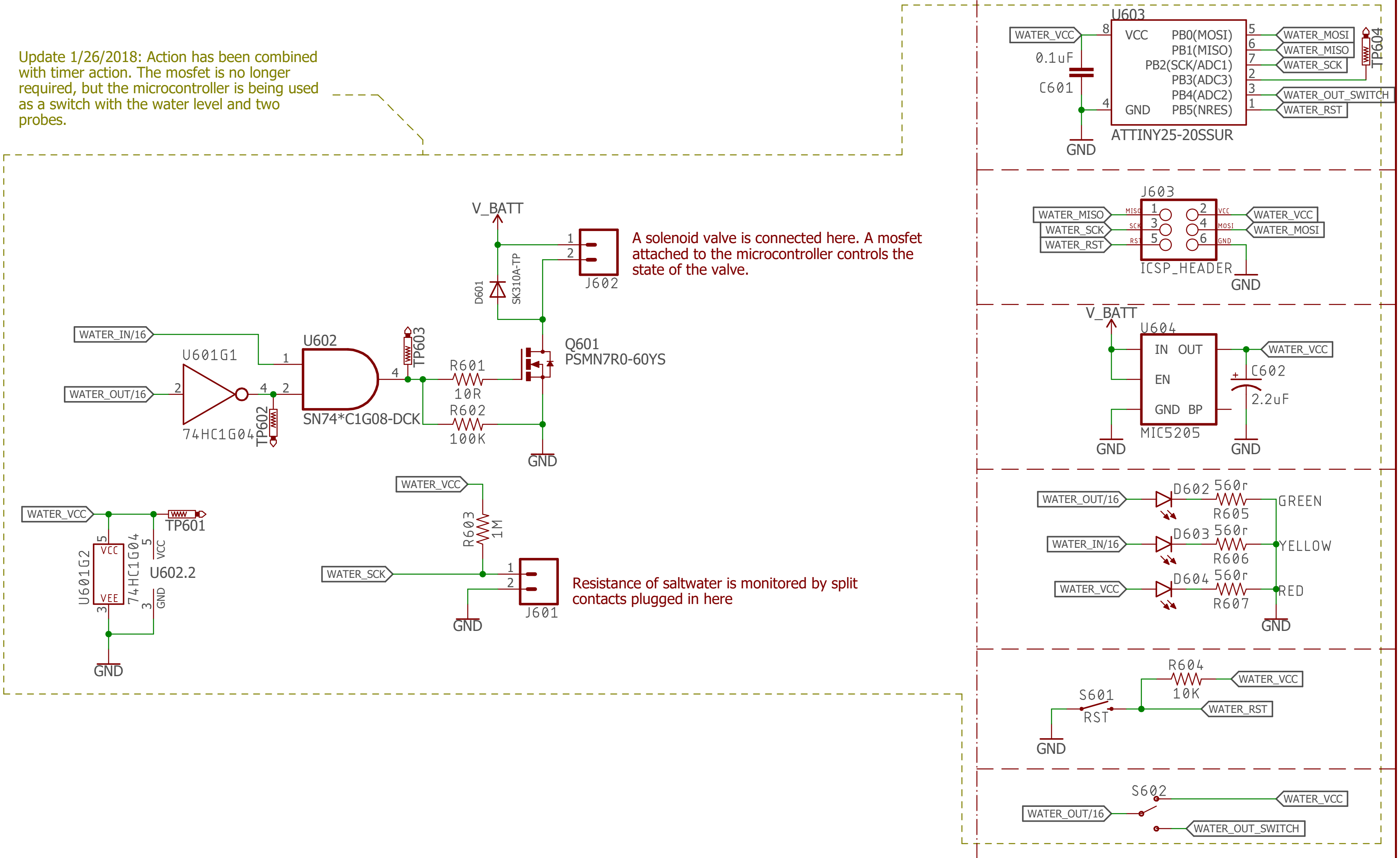

U603
WATER_VCC
8
VCC
PB0(MOSI)
PB1(MISO)
PB2(SCK/ADC1)
PB3(ADC3)
PB4(ADC2)
GND
PB5(NRES)
5
6
7
2
3
1
4
WATER_MOSI
WATER_MISO
WATER_SCK
WATER_OUT_SWITCH
WATER_RST
TP604
0.1uF
C601
GND
ATTINY25-20SSUR
J603
WATER_MISO
WATER_SCK
WATER_RST
MISO
SCK
RST
1
3
5
2
4
6
VCC
MOSI
GND
WATER_VCC
WATER_MOSI
ICSP_HEADER
GND
V_BATT
U604
IN
OUT
EN
GND
BP
WATER_VCC
C602
2.2uF
MIC5205
GND
GND
WATER_OUT/16
D602
560r
R605
GREEN
WATER_IN/16
D603
560r
R606
YELLOW
WATER_VCC
D604
560r
R607
RED
GND
R604
10K
WATER_VCC
S601
RST
WATER_RST
GND
S602
WATER_VCC
WATER_OUT/16
WATER_OUT_SWITCH
V_BATT
1
2
J602
D601
SK310A-TP
Q601
PSMN7R0-60YS
WATER_IN/16
U601G1
U602
1
2
4
WATER_OUT/16
2
4
74HC1G04
TP602
SN74*C1G08-DCK
TP603
R601
10R
R602
100K
GND
WATER_VCC
TP601
5
VCC
VEE
3
U601G2
74HC1G04
5
VCC
3
GND
U602.2
GND
WATER_VCC
R603
1M
WATER_SCK
1
2
J601
GND

Update 1/26/2018: Action has been combined with timer action. The mosfet is no longer required, but the microcontroller is being used as a switch with the water level and two probes.

A solenoid valve is connected here. A mosfet attached to the microcontroller controls the state of the valve.

Resistance of saltwater is monitored by split contacts plugged in here

WATER ACTION

TITLE: WMHS Eastern LI Invitational Circuit Board

Document Number:

REV:

Date: not saved!

Sheet: 6/16

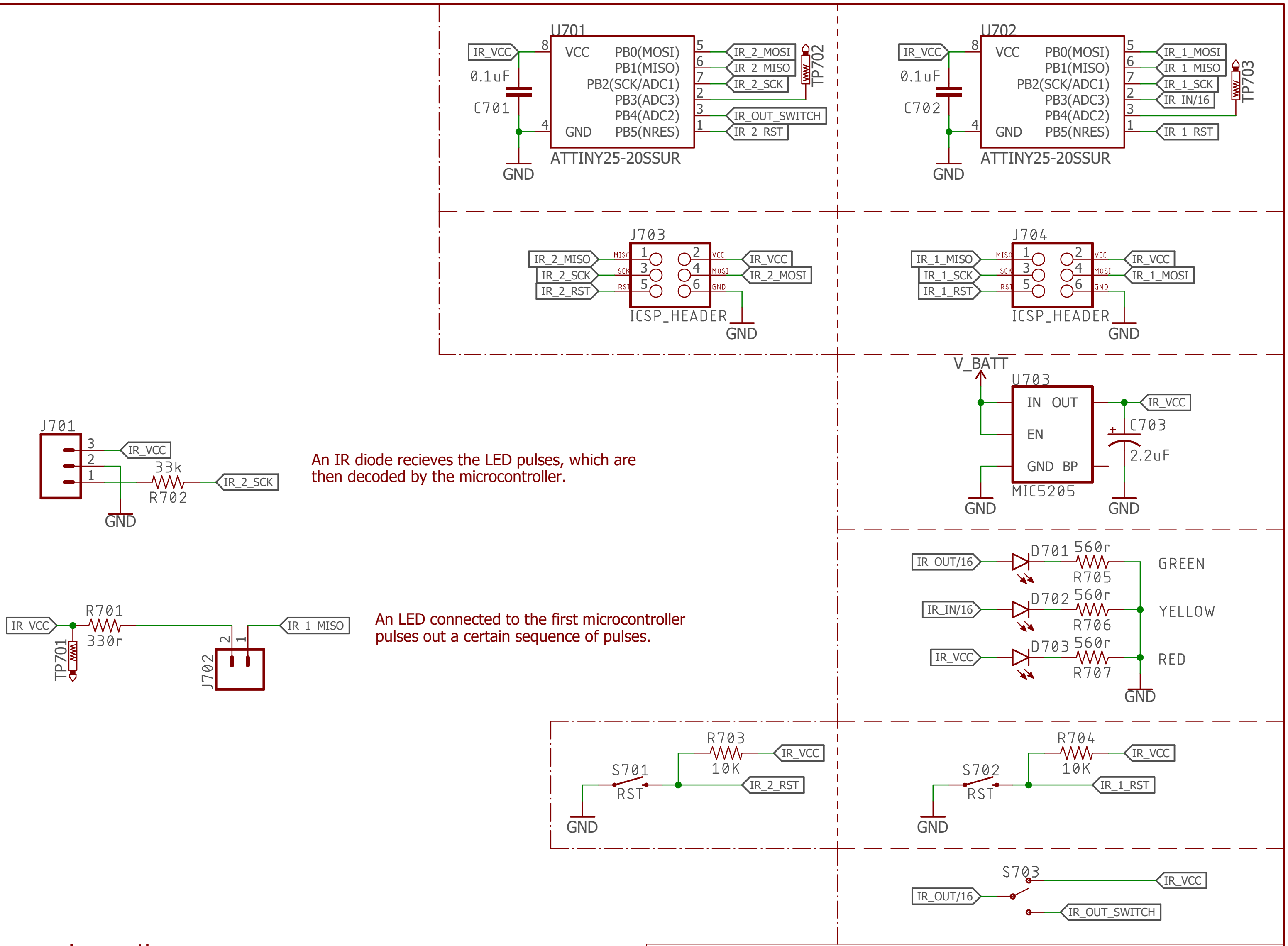

U701
IR_VCC
VCC
PB0(MOSI)
PB1(MISO)
PB2(SCK/ADC1)
PB3(ADC3)
PB4(ADC2)
PB5(NRES)
GND
0.1uF
C701
IR_2_MOSI
IR_2_MISO
IR_2_SCK
IR_OUT_SWITCH
IR_2_RST
TP702
ATTINY25-20SSUR
GND
U702
IR_VCC
0.1uF
C702
IR_1_MOSI
IR_1_MISO
IR_1_SCK
IR_IN/16
IR_1_RST
TP703
ATTINY25-20SSUR
GND
J703
IR_2_MISO
IR_2_SCK
IR_2_RST
IR_VCC
IR_2_MOSI
ICSP_HEADER
GND
J704
IR_1_MISO
IR_1_SCK
IR_1_RST
IR_VCC
IR_1_MOSI
ICSP_HEADER
GND
V_BATT
U703
IN
OUT
EN
GND
BP
MIC5205
IR_VCC
C703
2.2uF
GND
GND
J701
IR_VCC
33k
R702
IR_2_SCK
GND
IR_OUT/16
D701
560r
R705
GREEN
IR_IN/16
D702
560r
R706
YELLOW
IR_VCC
D703
560r
R707
RED
GND
IR_VCC
R701
330r
TP701
J702
IR_1_MISO
S701
RST
R703
10K
IR_VCC
IR_2_RST
GND
S702
RST
R704
10K
IR_VCC
IR_1_RST
GND
S703
IR_OUT/16
IR_VCC
IR_OUT_SWITCH

An IR diode recieves the LED pulses, which are then decoded by the microcontroller.

An LED connected to the first microcontroller pulses out a certain sequence of pulses.

An LED is turned on by the previous action.
The LED makes the phototransistor change
its resistance, signaling the microcontroller
to proceed to the next action. The output signal
turns the LED off again.

"Use an infrared beam where the transmitter
and receiver are at least 20 cm apart to begin
the next action."

IR ACTION

TITLE: WMHS Eastern LI Invitational Circuit Board

Document Number:

REV:

Date: not saved!

Sheet: 7/16

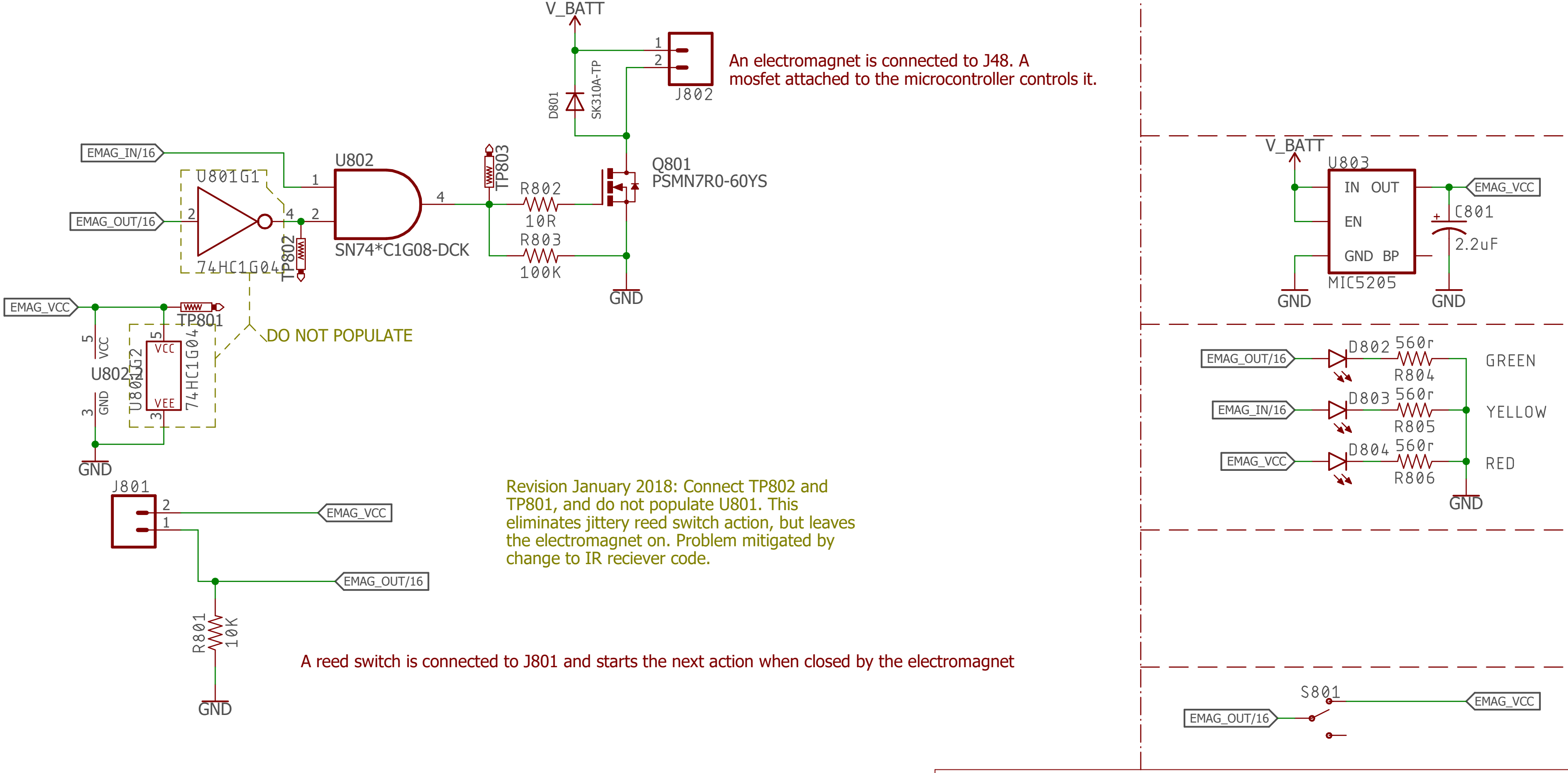
V_BATT
1
2
J802
D801
SK310A-TP
EMAG_IN/16
U802
1
4
2
U801G1
EMAG_OUT/16
2
4
74HC1G04
TP802
SN74*C1G08-DCK
TP803
R802
10R
R803
100K
Q801
PSMN7R0-60YS
GND
EMAG_VCC
TP801
DO NOT POPULATE
5
VCC
U802
U801G2
VCC
VEE
74HC1G04
3
GND
GND
J801
2
1
EMAG_VCC
EMAG_OUT/16
R801
10K
GND
V_BATT
U803
IN
OUT
EN
GND
BP
MIC5205
EMAG_VCC
C801
2.2uF
GND
GND
EMAG_OUT/16
D802
560r
R804
GREEN
EMAG_IN/16
D803
560r
R805
YELLOW
EMAG_VCC
D804
560r
R806
RED
GND
S801
EMAG_OUT/16
EMAG_VCC

An electromagnet is connected to J48. A mosfet attached to the microcontroller controls it.

Revision January 2018: Connect TP802 and TP801, and do not populate U801. This eliminates jittery reed switch action, but leaves the electromagnet on. Problem mitigated by change to IR reciever code.

A reed switch is connected to J801 and starts the next action when closed by the electromagnet

A reed switch triggers the next action after it is closed by the electromagnet.

"Activate a student-made electromagnet that begins the next action."

ELECTROMAGNET ACTION

TITLE: WMHS Eastern LI Invitational Circuit Board

Document Number:

REV:

Date: not saved!

Sheet: 8/16

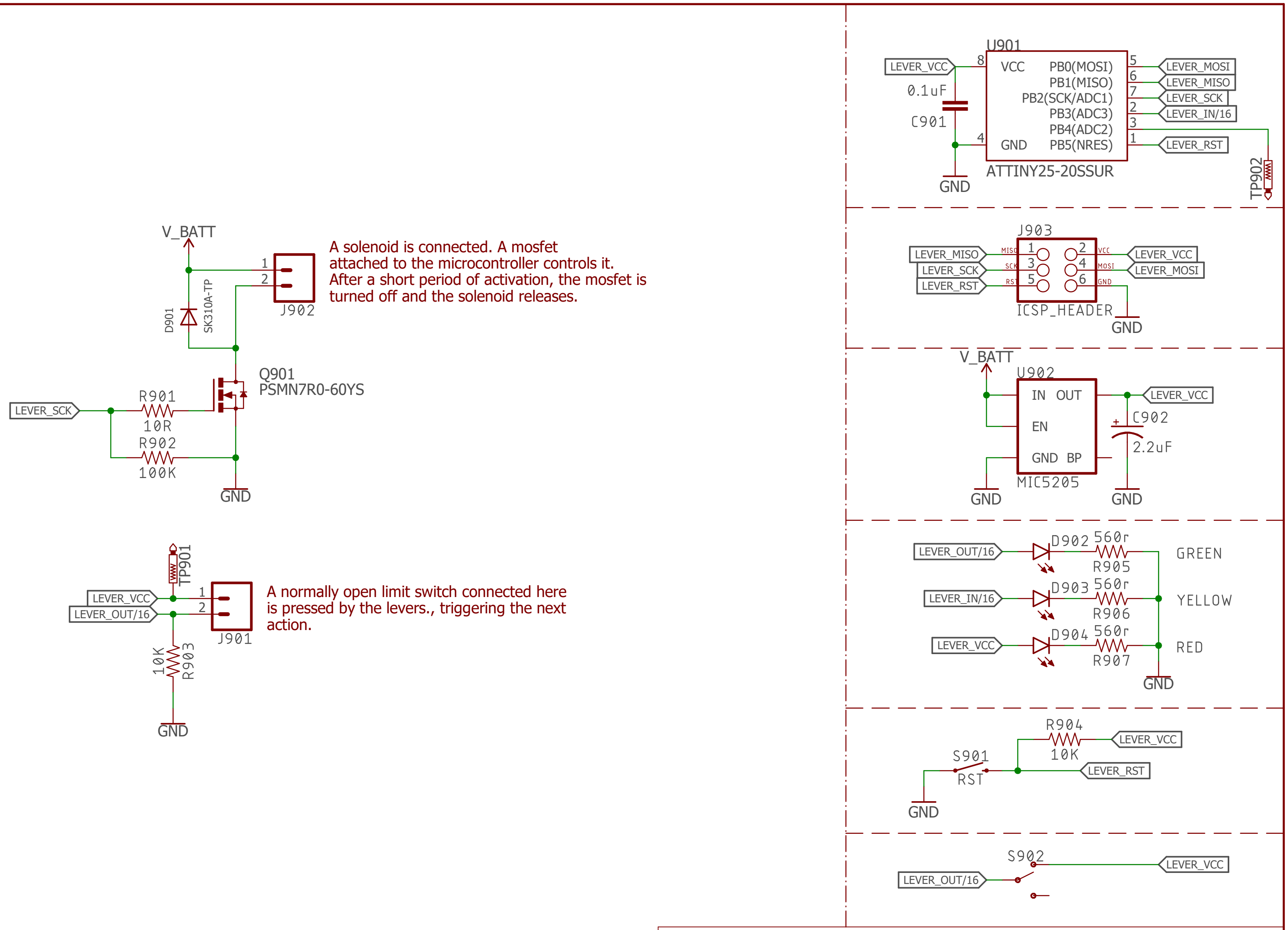
U901
LEVER_VCC
8
VCC
PB0(MOSI)
PB1(MISO)
PB2(SCK/ADC1)
PB3(ADC3)
PB4(ADC2)
PB5(NRES)
GND
4
5
6
7
2
3
1
0.1uF
C901
LEVER_MOSI
LEVER_MISO
LEVER_SCK
LEVER_IN/16
LEVER_RST
ATTINY25-20SSUR
GND
TP902
J903
LEVER_MISO
LEVER_SCK
LEVER_RST
MISO
SCK
RST
1
2
3
4
5
6
VCC
MOSI
GND
LEVER_VCC
LEVER_MOSI
ICSP_HEADER
GND
V_BATT
U902
IN OUT
EN
GND BP
MIC5205
LEVER_VCC
C902
2.2uF
GND
GND
LEVER_OUT/16
D902
560r
R905
GREEN
LEVER_IN/16
D903
560r
R906
YELLOW
LEVER_VCC
D904
560r
R907
RED
GND
R904
10K
LEVER_VCC
S901
RST
LEVER_RST
GND
S902
LEVER_OUT/16
LEVER_VCC
V_BATT
1
2
J902
D901
SK310A-TP
Q901
PSMN7R0-60YS
LEVER_SCK
R901
10R
R902
100K
GND
TP901
LEVER_VCC
LEVER_OUT/16
1
2
J901
10K
R903
GND

A solenoid is connected. A mosfet attached to the microcontroller controls it. After a short period of activation, the mosfet is turned off and the solenoid releases.

A normally open limit switch connected here is pressed by the levers., triggering the next action.

A reed switch triggers the next action after it is closed by the electromagnet.

"Use the mechanical advantage of all 3 classes of levers in sequence to begin the next action."

LEVER ACTION

TITLE: WMHS Eastern LI Invitational Circuit Board

Document Number:

REV:

Date: not saved!

Sheet: 9/16

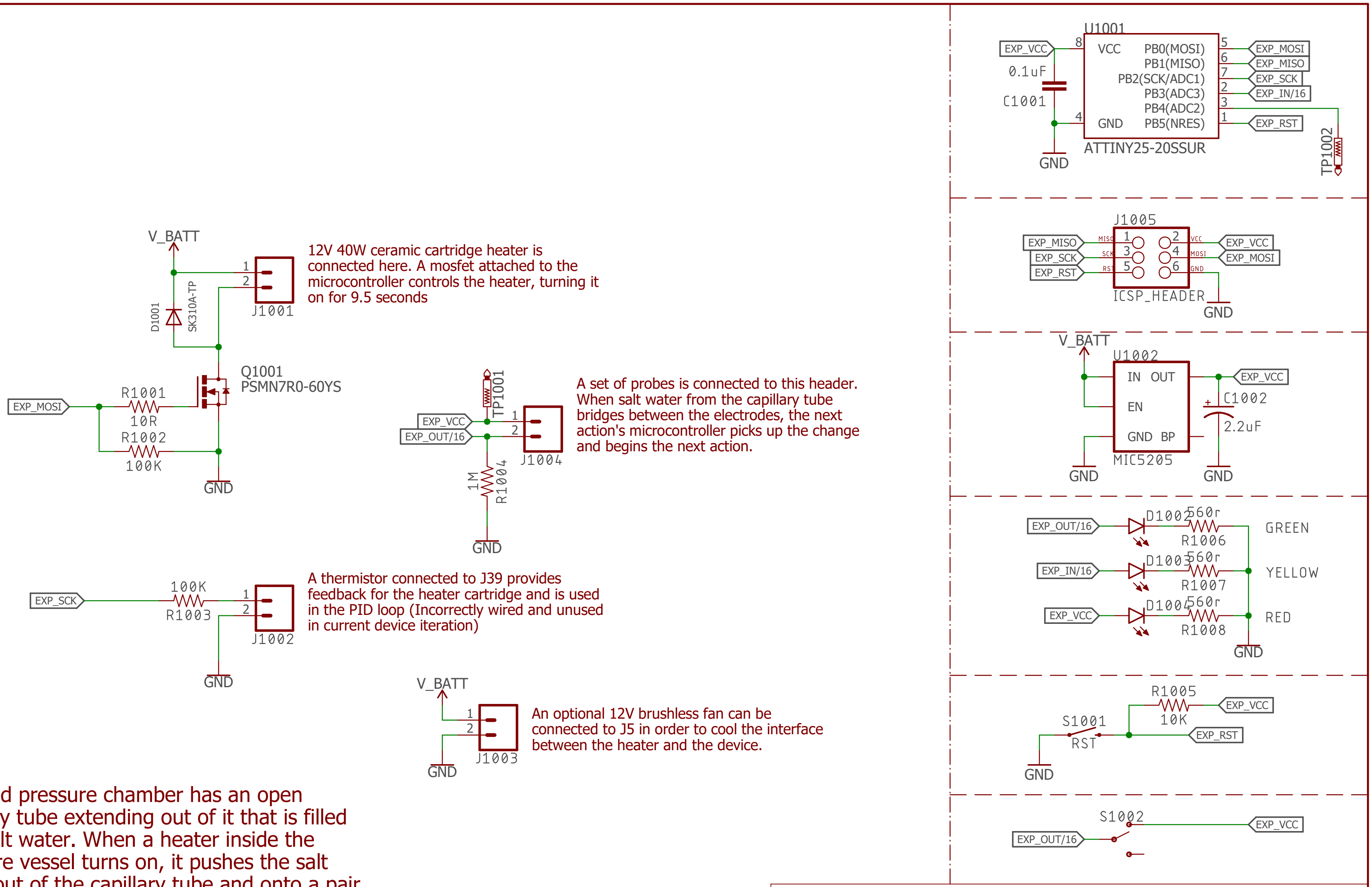
U1001
EXP_VCC
8
VCC
PB0(MOSI)
PB1(MISO)
PB2(SCK/ADC1)
PB3(ADC3)
PB4(ADC2)
PB5(NRES)
GND
4
5
6
7
2
3
1
EXP_MOSI
EXP_MISO
EXP_SCK
EXP_IN/16
EXP_RST
0.1uF
C1001
GND
ATTINY25-20SSUR
TP1002
J1005
EXP_MISO
EXP_SCK
EXP_RST
MISO
SCK
RST
1
3
5
2
4
6
VCC
MOSI
GND
EXP_VCC
EXP_MOSI
ICSP_HEADER
GND
V_BATT
U1002
IN
OUT
EN
GND
BP
EXP_VCC
C1002
2.2uF
MIC5205
GND
GND
EXP_OUT/16
D1002
560r
R1006
GREEN
EXP_IN/16
D1003
560r
R1007
YELLOW
EXP_VCC
D1004
560r
R1008
RED
GND
R1005
10K
EXP_VCC
S1001
RST
EXP_RST
GND
S1002
EXP_VCC
EXP_OUT/16
V_BATT
1
2
J1001
D1001
SK310A-TP
Q1001
PSMN7R0-60YS
EXP_MOSI
R1001
10R
R1002
100K
GND
TP1001
EXP_VCC
EXP_OUT/16
1
2
J1004
1M
R1004
GND
EXP_SCK
100K
R1003
1
2
J1002
GND
V_BATT
1
2
J1003
GND

12V 40W ceramic cartridge heater is connected here. A mosfet attached to the microcontroller controls the heater, turning it on for 9.5 seconds

A set of probes is connected to this header. When salt water from the capillary tube bridges between the electrodes, the next action's microcontroller picks up the change and begins the next action.

A thermistor connected to J39 provides feedback for the heater cartridge and is used in the PID loop (Incorrectly wired and unused in current device iteration)

An optional 12V brushless fan can be connected to J5 in order to cool the interface between the heater and the device.

A sealed pressure chamber has an open capillary tube extending out of it that is filled with salt water. When a heater inside the pressure vessel turns on, it pushes the salt water out of the capillary tube and onto a pair of electrodes.

"Use a thermal reaction which expands a gas to activate the next action."

CLARIFICATION:
"Use a change in temperature which expands a gas to activate the next action."

GAS EXPANSION ACTION

TITLE: WMHS Eastern LI Invitational Circuit Board

Document Number:

REV:

Date: not saved!

Sheet: 10/16

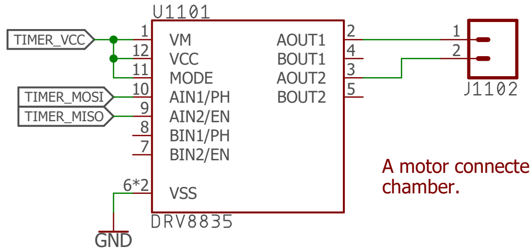
U1101
TIMER_VCC
TIMER_MOSI
TIMER_MISO
VM
VCC
MODE
AIN1/PH
AIN2/EN
BIN1/PH
BIN2/EN
VSS
AOUT1
BOUT1
AOUT2
BOUT2
6*2
GND
DRV8835
J1102

A motor connected to this header flips the pressure chamber.

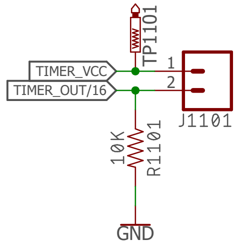
TP1101
TIMER_VCC
TIMER_OUT/16
J1101
10K
R1101
GND

A normally open limit switch connected here is pressed by the float in the water container.

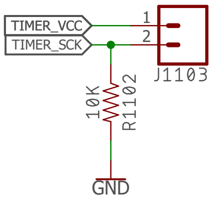
TIMER_VCC
TIMER_SCK
J1103
10K
R1102
GND

A normally open limit switch tells the motor driver when to shut off.

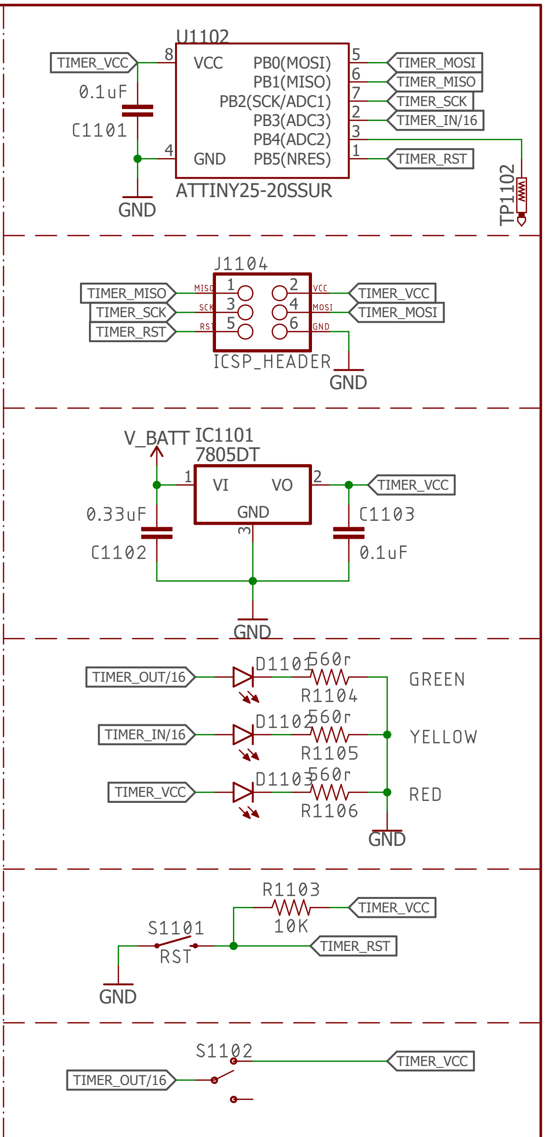
U1102
TIMER_VCC
0.1uF
C1101
VCC
GND
PB0(MOSI)
PB1(MISO)
PB2(SCK/ADC1)
PB3(ADC3)
PB4(ADC2)
PB5(NRES)
TIMER_MOSI
TIMER_MISO
TIMER_SCK
TIMER_IN/16
TIMER_RST
ATTINY25-20SSUR
TP1102
GND
J1104
TIMER_MISO
TIMER_SCK
TIMER_RST
TIMER_VCC
TIMER_MOSI
ICSP_HEADER
GND
V_BATT
IC1101
7805DT
VI
VO
GND
TIMER_VCC
0.33uF
C1102
C1103
0.1uF
GND
TIMER_OUT/16
D1101
560r
R1104
GREEN
TIMER_IN/16
D1102
560r
R1105
YELLOW
TIMER_VCC
D1103
560r
R1106
RED
GND
R1103
10K
TIMER_VCC
S1101
RST
TIMER_RST
GND
S1102
TIMER_VCC
TIMER_OUT/16

Alkaseltzer and water start uncombined in pressure chamber. Chamber flips, combining them and beginning action. Tube connected to chamber contains water that is pushed through and into closed container by pressure. Water level raises, pushing up on a float switch.

"Add water to a closed container so that it completes an electric circuit and begins the next action."

"To receive Bonus Points, participants must designate an action, either scorable or non-scorable, taking over 30 seconds that does not use electricity or springs for power."

CHEMICAL TIMER/WATER

TITLE: WMHS Eastern LI Invitational Circuit Board

Document Number:

REV:

Date: not saved!

Sheet: 11/16

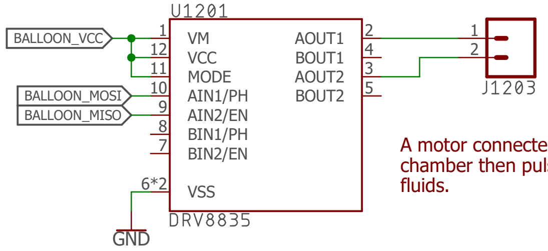
U1201
BALLOON_VCC
BALLOON_MOSI
BALLOON_MISO
1
12
11
10
9
8
7
6*2
VM
VCC
MODE
AIN1/PH
AIN2/EN
BIN1/PH
BIN2/EN
VSS
AOUT1
BOUT1
AOUT2
BOUT2
2
4
3
5
DRV8835
GND
1
2
J1203

A motor connected to J40 flips the pressure chamber then pulses back and forth to mix the fluids.

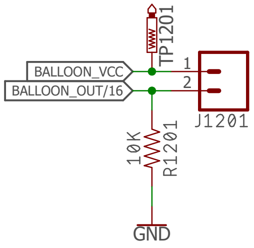
TP1201
BALLOON_VCC
BALLOON_OUT/16
1
2
J1201
10K
R1201
GND

A normally open limit switch connected to J7 is pressed by the expanding balloon.

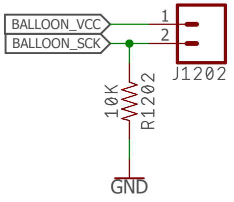
BALLOON_VCC
BALLOON_SCK
1
2
J1202
10K
R1202
GND

A normally open limit switch tells the motor driver when to shut off.

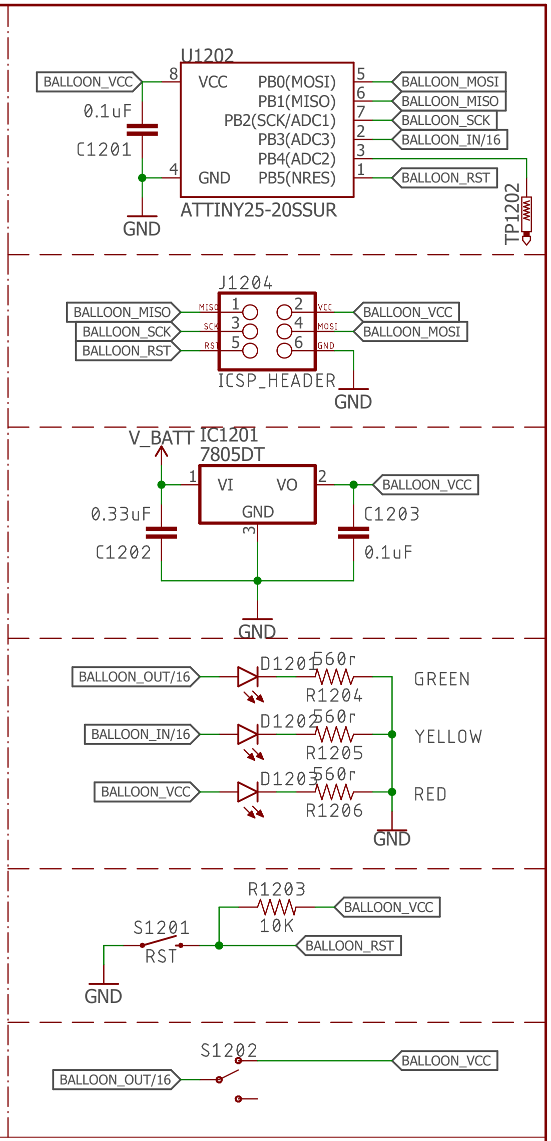
U1202
BALLOON_VCC
8
VCC
0.1uF
C1201
4
GND
GND
PB0(MOSI)
PB1(MISO)
PB2(SCK/ADC1)
PB3(ADC3)
PB4(ADC2)
PB5(NRES)
5
6
7
2
3
1
BALLOON_MOSI
BALLOON_MISO
BALLOON_SCK
BALLOON_IN/16
BALLOON_RST
ATTINY25-20SSUR
TP1202
J1204
BALLOON_MISO
BALLOON_SCK
BALLOON_RST
MISO
SCK
RST
1
3
5
2
4
6
VCC
MOSI
GND
BALLOON_VCC
BALLOON_MOSI
ICSP_HEADER
GND
V_BATT
IC1201
7805DT
1
VI
VO
GND
2
3
BALLOON_VCC
0.33uF
C1202
C1203
0.1uF
GND
BALLOON_OUT/16
D1201
560r
R1204
GREEN
BALLOON_IN/16
D1202
560r
R1205
YELLOW
BALLOON_VCC
D1203
560r
R1206
RED
GND
R1203
BALLOON_VCC
10K
S1201
RST
BALLOON_RST
GND
S1202
BALLOON_VCC
BALLOON_OUT/16

Pressure chamber with baking soda and 30% warm vinegar is flipped, the two react and the resulting reaction inflates a balloon which hits a limit switch 20cm away.

"Use a chemical reaction that inflates a balloon so that the balloon strikes an object that originally was at least 20 cm away from the balloon, so that the action of striking the object continues the sequence of events."

BALLOON ACTION

TITLE: WMHS Eastern LI Invitational Circuit Board

Document Number:
REV:

Date: not saved!
Sheet: 12/16

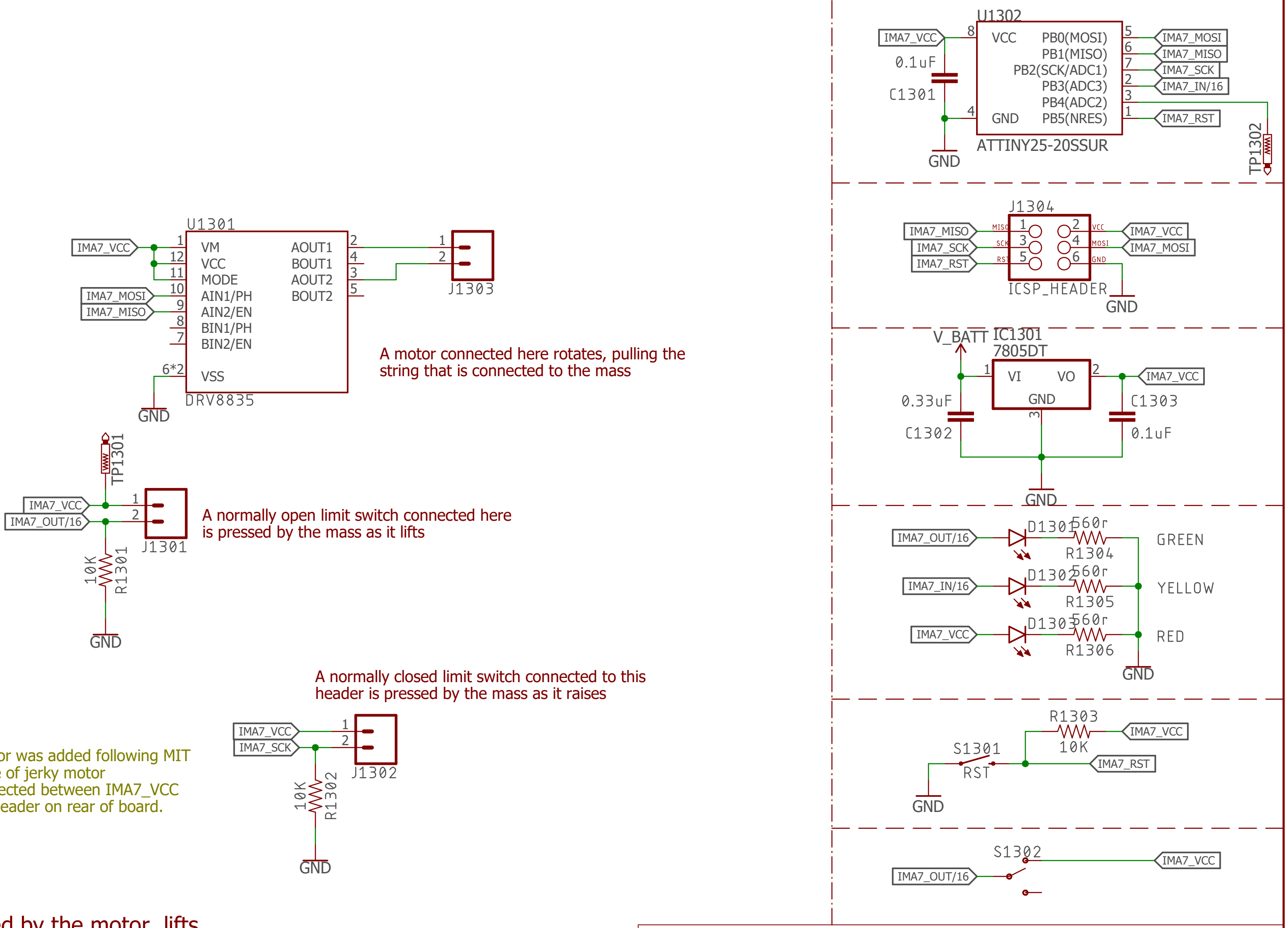
U1302
IMA7_VCC
8
VCC
PB0(MOSI)
PB1(MISO)
PB2(SCK/ADC1)
PB3(ADC3)
PB4(ADC2)
GND
PB5(NRES)
4
5
6
7
2
3
1
IMA7_MOSI
IMA7_MISO
IMA7_SCK
IMA7_IN/16
IMA7_RST
0.1uF
C1301
GND
ATTINY25-20SSUR
TP1302
J1304
IMA7_MISO
IMA7_SCK
IMA7_RST
MISO
SCK
RST
VCC
MOSI
GND
IMA7_VCC
IMA7_MOSI
ICSP_HEADER
GND
V_BATT
IC1301
7805DT
VI
VO
GND
IMA7_VCC
0.33uF
C1302
C1303
0.1uF
GND
IMA7_OUT/16
D1301
560r
R1304
GREEN
IMA7_IN/16
D1302
560r
R1305
YELLOW
IMA7_VCC
D1303
560r
R1306
RED
GND
R1303
IMA7_VCC
10K
S1301
RST
IMA7_RST
GND
S1302
IMA7_VCC
IMA7_OUT/16
U1301
IMA7_VCC
VM
VCC
MODE
AIN1/PH
AIN2/EN
BIN1/PH
BIN2/EN
VSS
AOUT1
BOUT1
AOUT2
BOUT2
IMA7_MOSI
IMA7_MISO
6*2
GND
DRV8835
J1303
TP1301
IMA7_VCC
IMA7_OUT/16
J1301
10K
R1301
GND
IMA7_VCC
IMA7_SCK
J1302
10K
R1302
GND

A motor connected here rotates, pulling the string that is connected to the mass

A normally open limit switch connected here is pressed by the mass as it lifts

A normally closed limit switch connected to this header is pressed by the mass as it raises

100uF, 25V capacitor was added following MIT invitational because of jerky motor performance. Connected between IMA7_VCC and GND on ICSP header on rear of board.

The pulley system, powered by the motor, lifts a mass up 10cm and hits two limit switches, one turns off the motor and the other triggers the next action.

"Use a Pulley system with an ideal mechanical advantage (IMA) of at least 7, that lifts an object that is at least 500 g at least 10 vertical cm before the object initiates the next action."

IMA 7 PULLEY ACTION

TITLE: WMHS Eastern LI Invitational Circuit Board

Document Number:

REV:

Date: not saved!

Sheet: 13/16

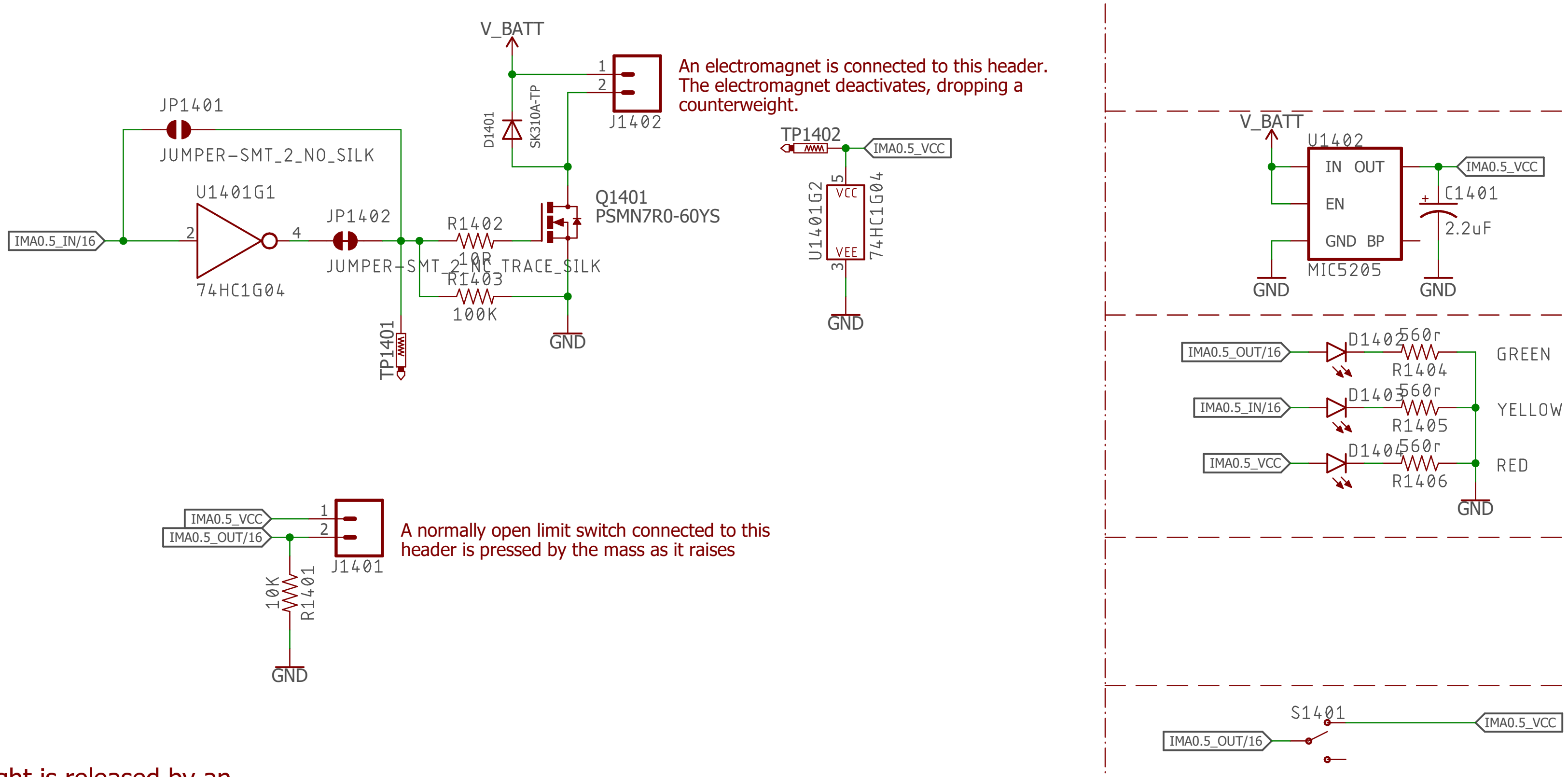
V_BATT
JP1401
JUMPER-SMT_2_NO_SILK
U1401G1
74HC1G04
IMA0.5_IN/16
2
4
JP1402
JUMPER-SMT_2_NC_TRACE_SILK
R1402
10R
R1403
100K
TP1401
D1401
SK310A-TP
1
2
J1402
Q1401
PSMN7R0-60YS
GND
TP1402
IMA0.5_VCC
5
VCC
U1401G2
74HC1G04
VEE
3
GND
IMA0.5_VCC
IMA0.5_OUT/16
1
2
J1401
10K
R1401
GND
V_BATT
U1402
IN
OUT
EN
GND
BP
MIC5205
IMA0.5_VCC
C1401
2.2uF
GND
GND
IMA0.5_OUT/16
D1402
560r
R1404
GREEN
IMA0.5_IN/16
D1403
560r
R1405
YELLOW
IMA0.5_VCC
D1404
560r
R1406
RED
GND
S1401
IMA0.5_OUT/16
IMA0.5_VCC

An electromagnet is connected to this header. The electromagnet deactivates, dropping a counterweight.

A normally open limit switch connected to this header is pressed by the mass as it raises

A counterweight is released by an electromagnet, which drops and pulls up a 500g mass. The mass raises 10cm then hits a limit switch, triggering the next action.

"Use a Pulley system that has an ideal mechanical advantage (IMA) of 0.50 that lifts an object that is at least 500 g at least 10 vertical cm before the object initiates the next action."

IMA 0.5 PULLEY ACTION

TITLE: WMHS Eastern LI Invitational Circuit Board

Document Number:

REV:

Date: not saved!

Sheet: 14/16

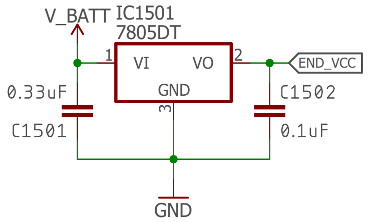
V_BATT
IC1501
7805DT
1
VI
VO
2
GND
3
END_VCC
0.33uF
C1501
C1502
0.1uF
GND

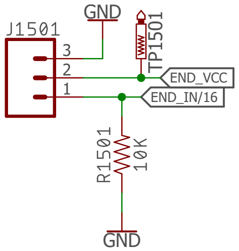
J1501
GND
TP1501
3
2
1
END_VCC
END_IN/16
R1501
10K
GND

Previous transfer triggers DFrobot sound recording
module (connected to J6), which then plays
the end recording.

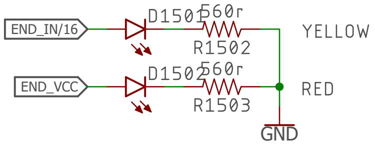
END_IN/16
D1501
560r
R1502
YELLOW
END_VCC
D1502
560r
R1503
RED
GND

"The device must play a recording of the
phrase “The End” to signal the end of the run.
This phrase must be clearly audible, and
demonstrated for the judges prior to the run."

END TASK

TITLE: WMHS Eastern LI Invitational Circuit Board

Document Number:

REV:

Date: not saved!

Sheet: 15/16

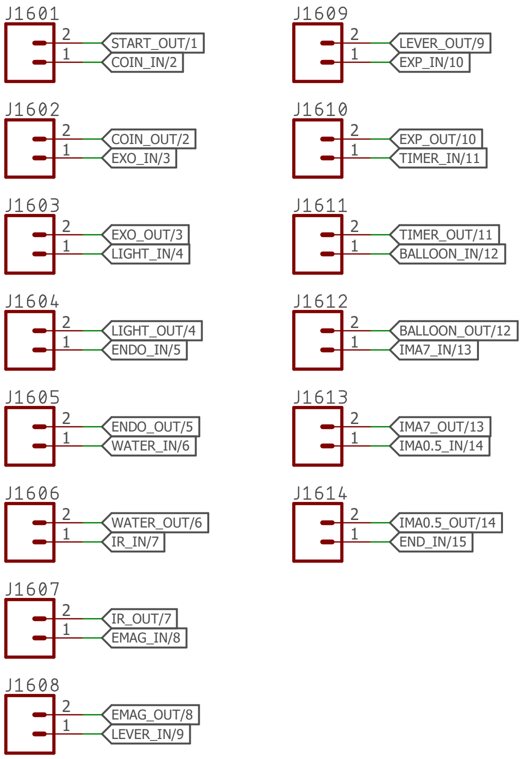
J1601
2
1
START_OUT/1
COIN_IN/2
J1602
COIN_OUT/2
EXO_IN/3
J1603
EXO_OUT/3
LIGHT_IN/4
J1604
LIGHT_OUT/4
ENDO_IN/5
J1605
ENDO_OUT/5
WATER_IN/6
J1606
WATER_OUT/6
IR_IN/7
J1607
IR_OUT/7
EMAG_IN/8
J1608
EMAG_OUT/8
LEVER_IN/9
J1609
LEVER_OUT/9
EXP_IN/10
J1610
EXP_OUT/10
TIMER_IN/11
J1611
TIMER_OUT/11
BALLOON_IN/12
J1612
BALLOON_OUT/12
IMA7_IN/13
J1613
IMA7_OUT/13
IMA0.5_IN/14
J1614
IMA0.5_OUT/14
END_IN/15

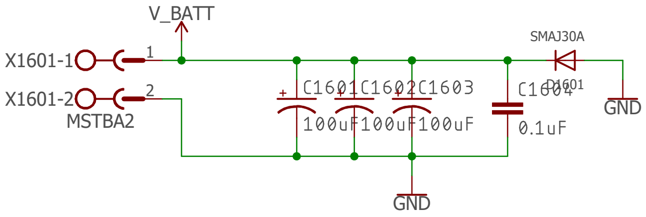
V_BATT
X1601-1
X1601-2
MSTBA2
1
2
C1601
C1602
C1603
100uF
100uF
100uF
C1604
0.1uF
SMAJ30A
D1601
GND
GND

Jumpers are installed on all of the above
headers, with the following exceptions:

J1605 ENDO_OUT -> J1606 IR_IN
J1606 WATER_OUT -> J1611 BALLOON_IN

Power and Inter-Action

TITLE: WMHS Eastern LI Invitational Circuit Board

Document Number:

REV:

Date: not saved!

Sheet: 16/16