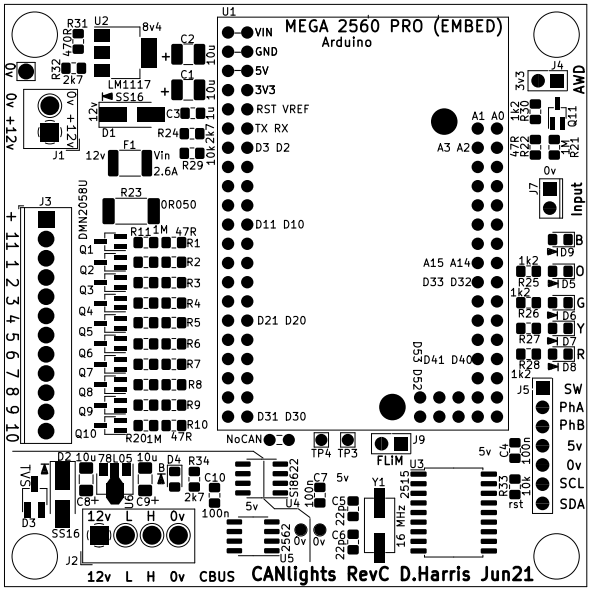

CANlights RevC 77mm x 77mm Dave Harris June 2021