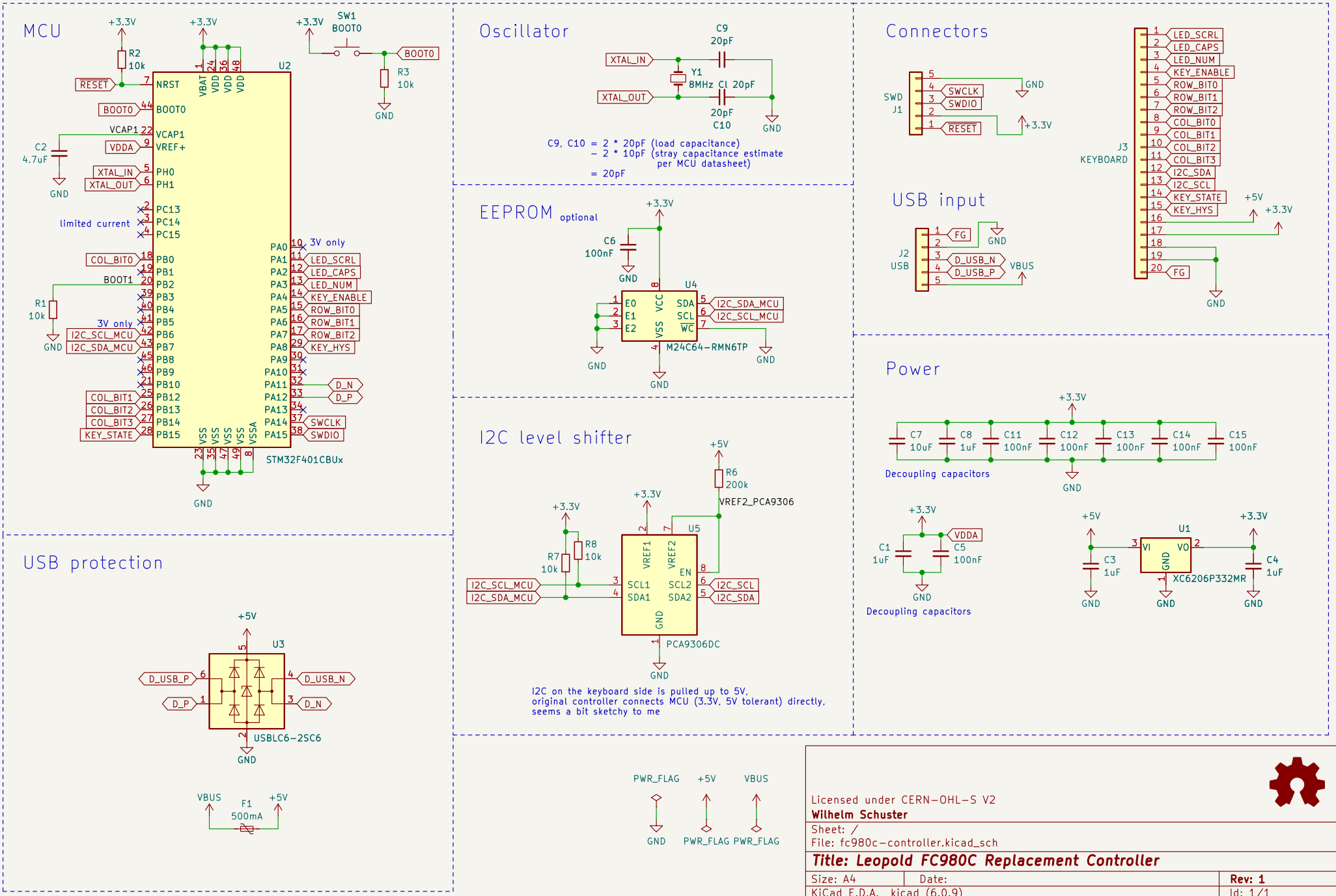
MCU
U2
STM32F401CBUx
R2 10k
C2 4.7uF
R1 10k
SW1 BOOT0
R3 10k
limited current
3V only
Oscillator
C9 20pF
C10 20pF
Y1 8MHz
C9, C10 = 2 * 20pF (load capacitance)
– 2 * 10pF (stray capacitance estimate per MCU datasheet)
= 20pF
EEPROM optional
C6 100nF
U4
M24C64-RMN6TP
I2C level shifter
R6 200k
VREF2_PCA9306
U5
R7 10k
R8 10k
PCA9306DC
I2C on the keyboard side is pulled up to 5V,
original controller connects MCU (3.3V, 5V tolerant) directly,
seems a bit sketchy to me
USB protection
U3
USBLC6-2SC6
F1 500mA
Connectors
SWD J1
J3 KEYBOARD
USB input
J2 USB
Power
C7 10uF
C8 1uF
C11 100nF
C12 100nF
C13 100nF
C14 100nF
C15 100nF
Decoupling capacitors
C1 1uF
C5 100nF
C3 1uF
U1
XC6206P332MR
C4 1uF
PWR_FLAG
Licensed under CERN-OHL-S V2
Wilhelm Schuster
Sheet: /
File: fc980c-controller.kicad_sch
Title: Leopold FC980C Replacement Controller
Size: A4
Date:
Rev: 1
KiCad E.D.A. kicad (6.0.9)
Id: 1/1