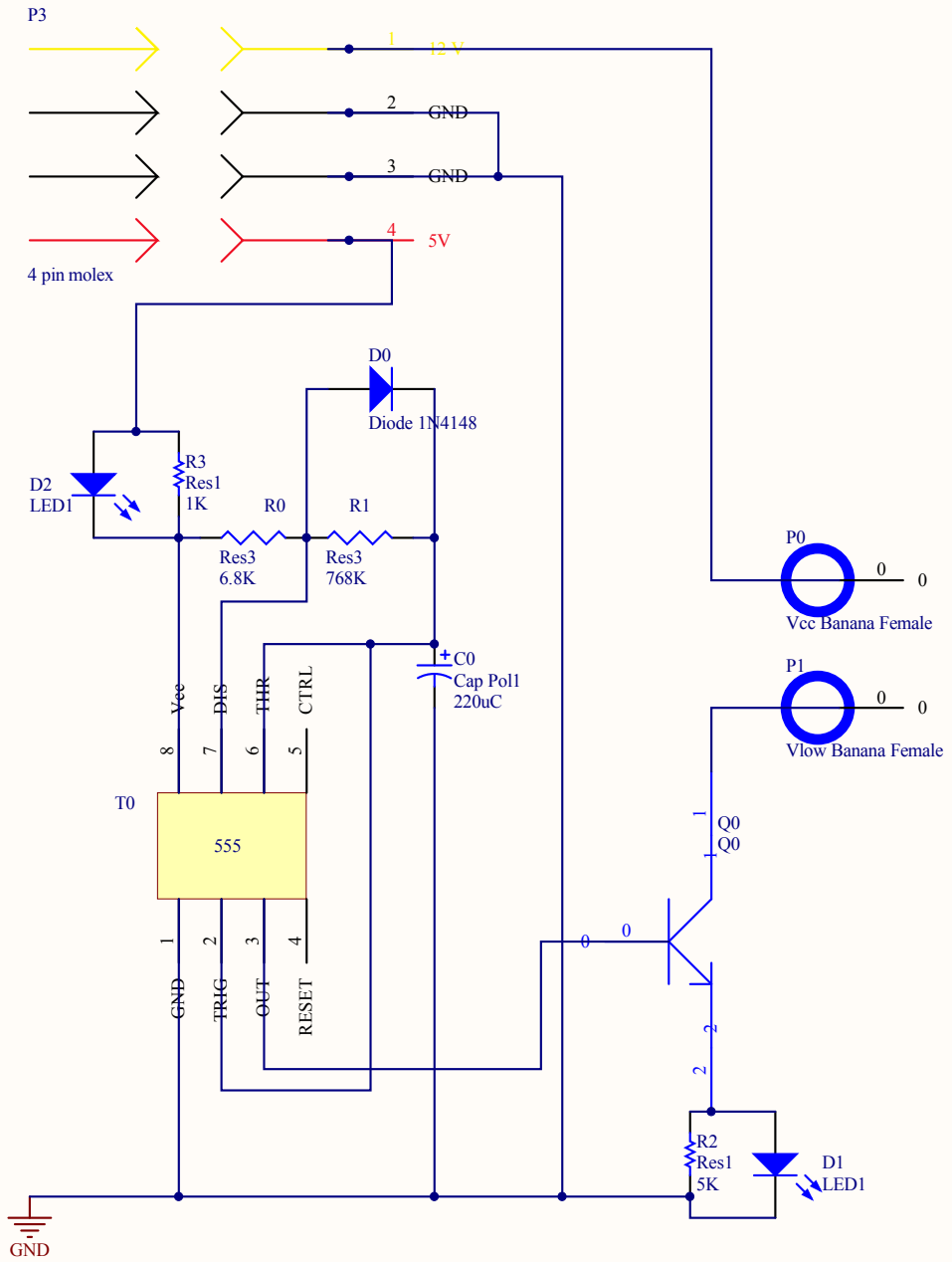

Title		
Size A	Number	Revision
Date: 6/8/2010		Sheet of
File: C:\Users\David\thermal timer.SchDoc		Drawn By: