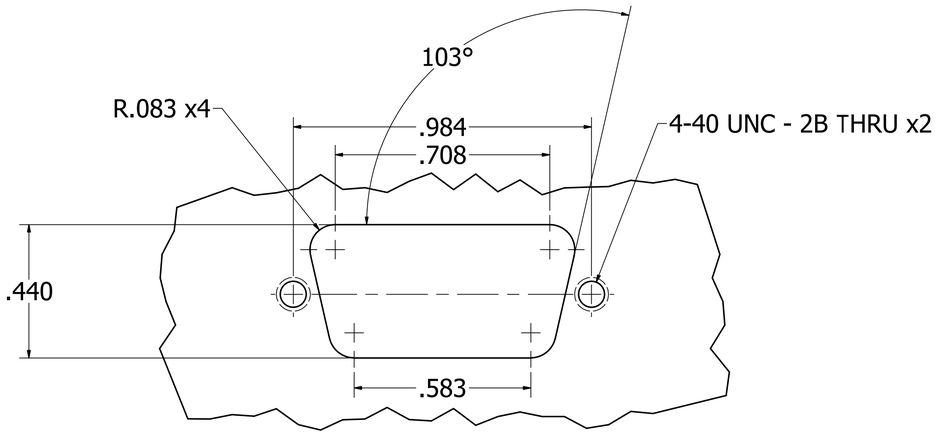

DETAIL A
SCALE 4 : 1

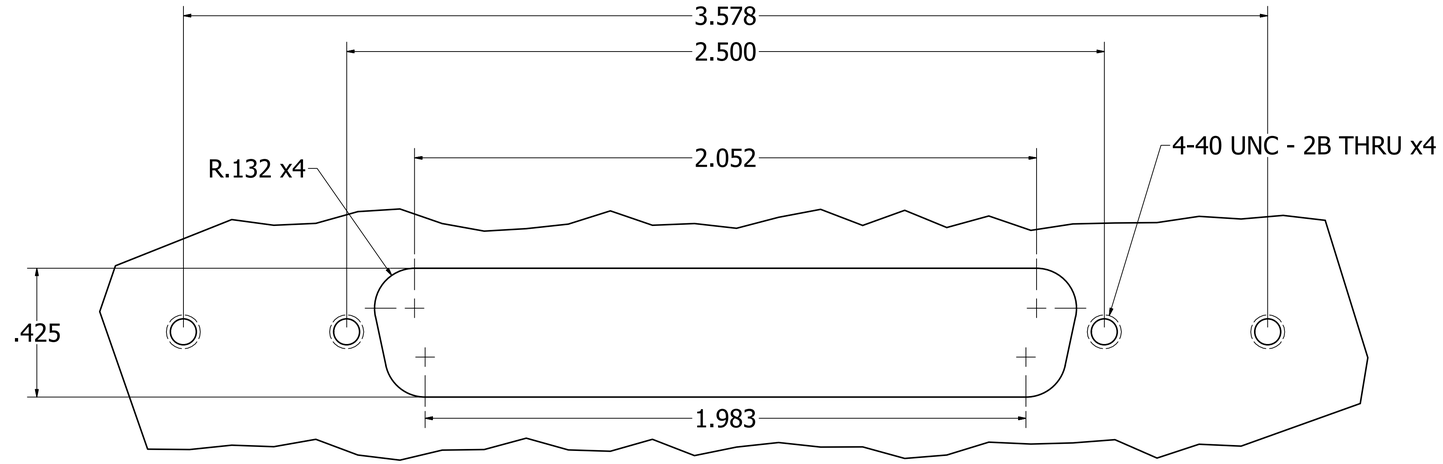

DETAIL B
SCALE 4 : 1

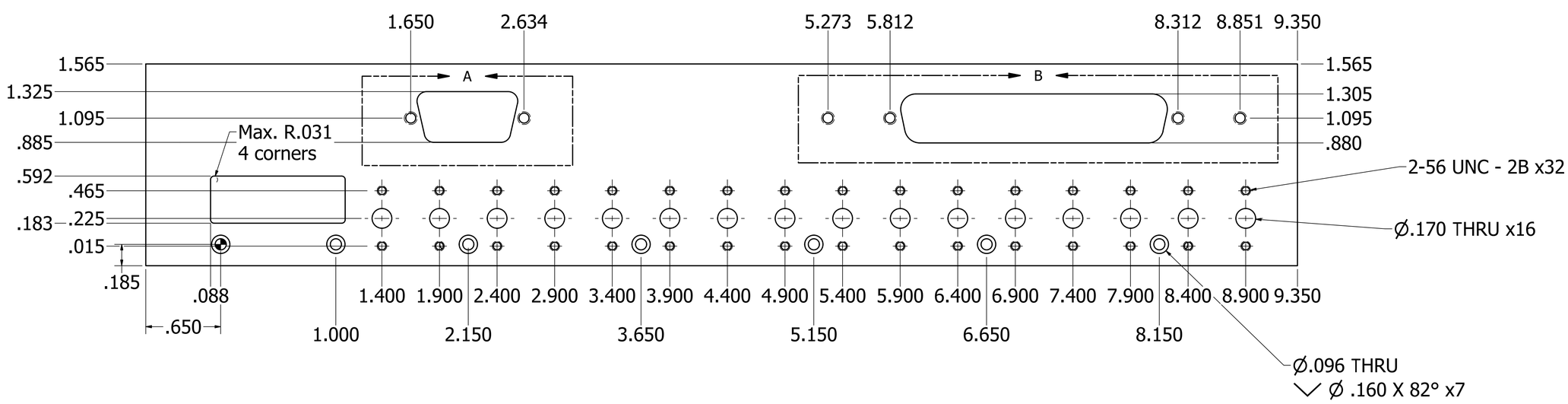

Dimensions: Inches
Tolerance: +/- .003"
Material: 6063T52 Alum.
Iridite Finish (do not disturb)
Reference Dimensions in ()

DRAWN Zara A.	9/5/2017	UC Berkeley
CHECKED Matt		TITLE SNAP Enclosure front - reduced dsub9 cutout
QA		
MFG		
APPROVED		
SIZE D	DWG NO R58010-175-with SNAP V2 features	REV
SCALE 2	SHEET 1 OF 1	