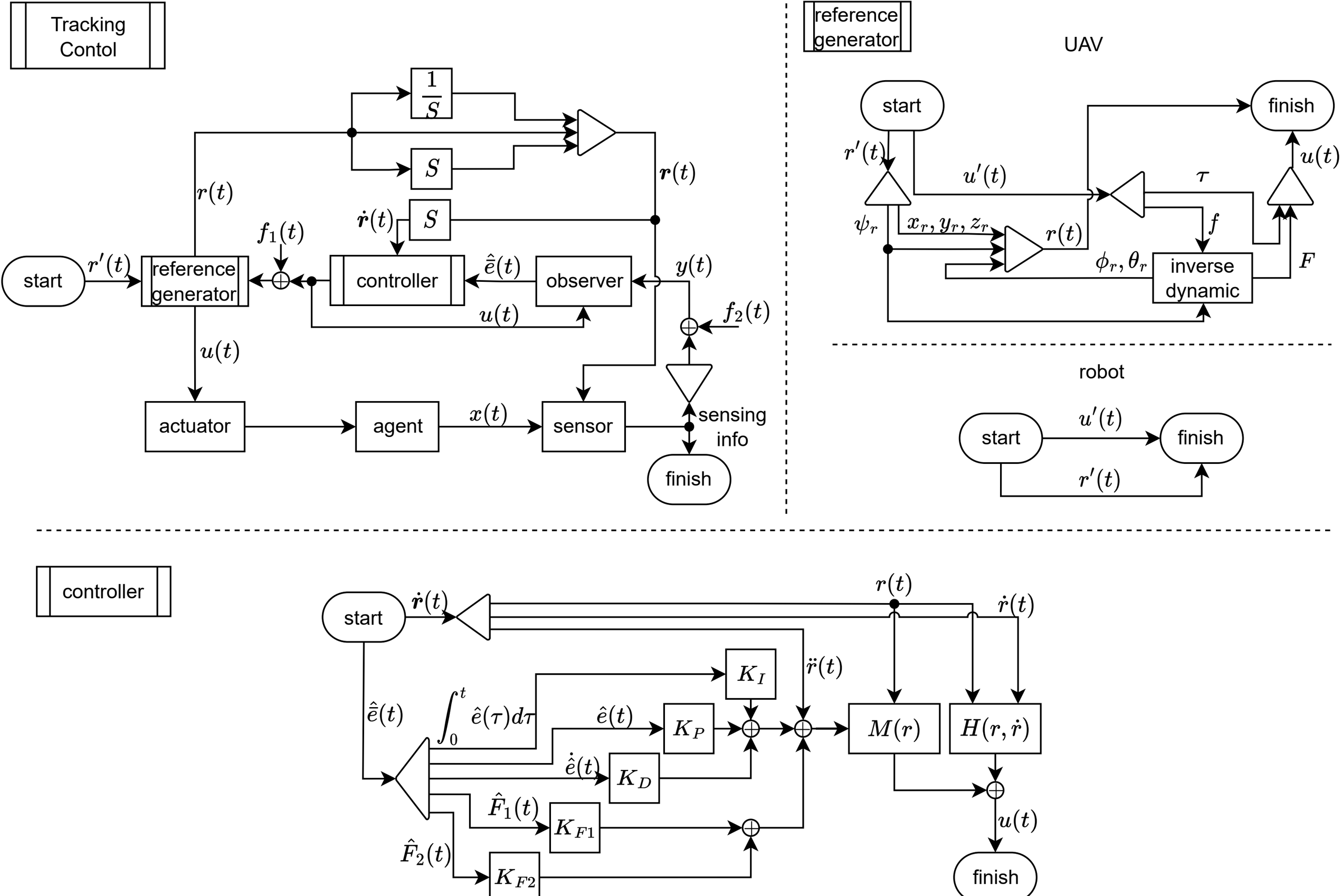
Tracking Contol
start
$r'(t)$
reference generator
$r(t)$
$u(t)$
$f_1(t)$
$\dot{r}(t)$
$\frac{1}{S}$
S
S
controller
$\hat{\bar{e}}(t)$
observer
$u(t)$
$y(t)$
$f_2(t)$
$r(t)$
actuator
agent
$x(t)$
sensor
sensing info
finish
reference generator
UAV
start
finish
$r'(t)$
$u'(t)$
τ
$u(t)$
ψ_r
x_r, y_r, z_r
$r(t)$
f
ϕ_r, θ_r
inverse dynamic
F
robot
start
$u'(t)$
finish
$r'(t)$
controller
start
$\dot{r}(t)$
$r(t)$
$\dot{r}(t)$
$\ddot{r}(t)$
K_I
$\hat{\bar{e}}(t)$
$\int_0^t \hat{e}(\tau)d\tau$
$\hat{e}(t)$
K_P
$M(r)$
$H(r, \dot{r})$
$\dot{\hat{e}}(t)$
K_D
$\hat{F}_1(t)$
K_{F1}
$u(t)$
$\hat{F}_2(t)$
K_{F2}
finish