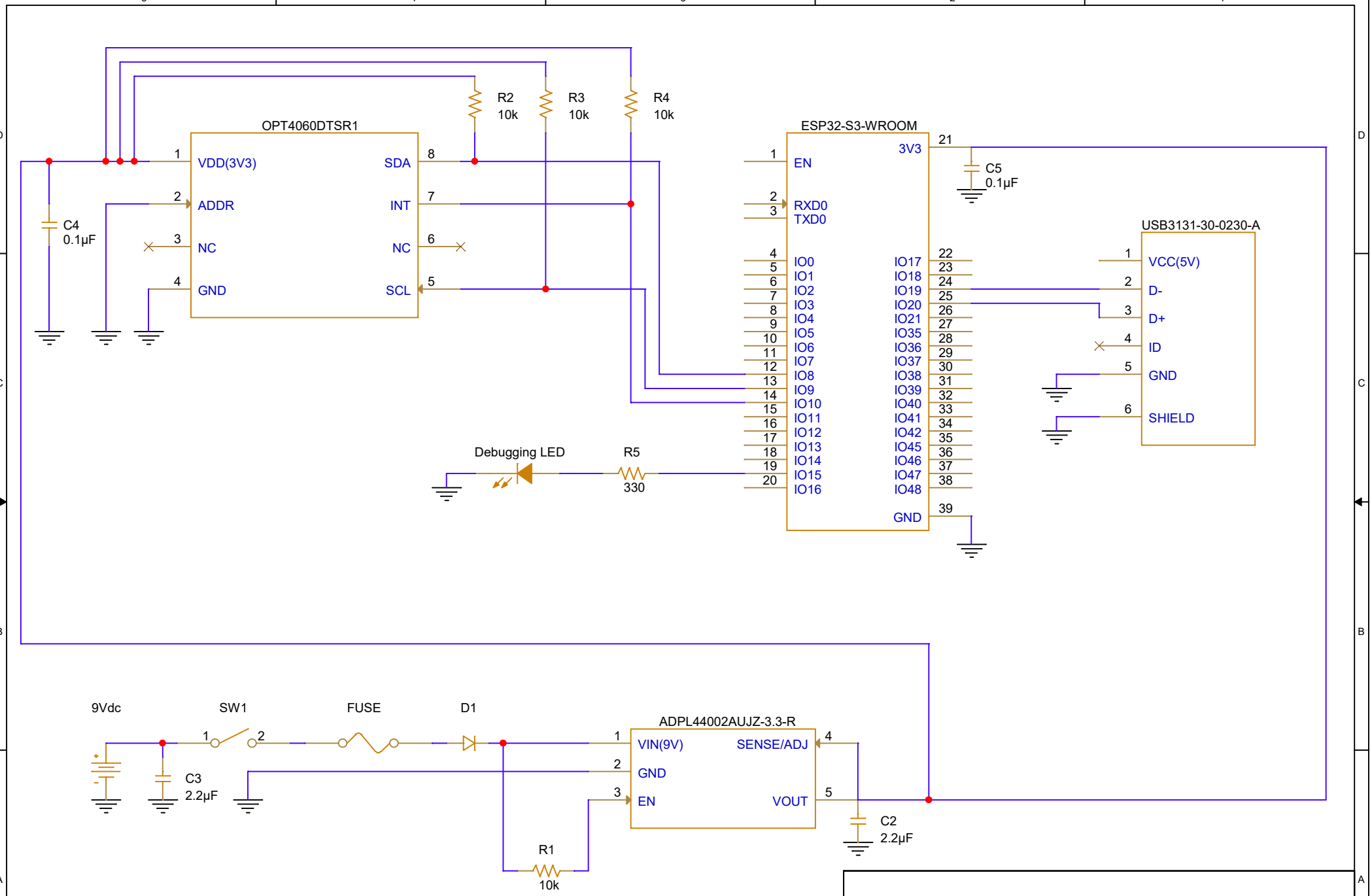

Title	EGR 314 David Diaz Sensor Subsystem	
Size A	Document Number <Doc>	Rev
Date: Thursday, February 20, 2025	Sheet 1 of 1	