EU CTR: 2022-501396-62-00
IND Number: 138791

Regeneron Pharmaceuticals, Inc.

Clinical Study Protocol

AN OPEN-LABEL, RANDOMIZED, PHASE 3 STUDY OF LINVOSELTAMAB (REGN5458; ANTI-BCMA X ANTI-CD3 BISPECIFIC ANTIBODY) VERSUS THE COMBINATION OF ELOTUZUMAB, POMALIDOMIDE, AND DEXAMETHASONE (EPd), IN PATIENTS WITH RELAPSED/REFRACTORY MULTIPLE MYELOMA (LINKER-MM3)

Compound:	Linvoseltamab (REGN5458)
Study Name:	LINKER-MM3
Clinical Phase:	3
Protocol Number:	R5458-ONC-2245
Protocol Version:	Amendment 2 EU&UK
Amendment 2 EU&UK Date of Issue:	*See appended electronic signature page*
Amendment 1 EU&UK Date of Issue:	18 Apr 2023
Original Version 2 Date of Issue:	21 Dec 2022
Original Version 1 Date of Issue:	24 Nov 2022
Medical /Study Director:	Rafael Conti, MD Medical Director, Clinical Sciences Hematology Clinical Development
Clinical Scientist:	James Drew, MA Director, Clinical Sciences Hematology Clinical Development
Sponsor's Address:	Regeneron Pharmaceuticals, Inc. 777 Old Saw Mill River Road Tarrytown, NY 10591

Confidential: This submission contains confidential and proprietary commercial information and/or trade secrets which are subject to protection under laws and regulations worldwide including, but not limited to TRIPS Article 39 and regional, national or state laws whether by legislation or in equity. For the purposes of compliance with all applicable freedom of information laws, and regulations, and their equivalents anywhere in the world including but not limited to the US Freedom of Information Act 5 U.S.C. §552, Regeneron expects that, prior to disclosure to third parties of any information and/or data related to, or contained within, this submission, it will be given every opportunity under applicable laws to protect its commercial interests and/or its trade secrets including the opportunity to object to such disclosure and/or provide redaction proposals.

AMENDMENT HISTORY

Overall Rationale for Amendment 2 EU&UK

The primary purpose of this amendment is to address feedback during review of the protocol from Health Authorities (HAs) and Institutional Review Boards.

Description of Change	Brief Rationale	Section # and Name
Added additional justification for the choice of elotuzumab, pomalidomide, and dexamethasone (EPd) as a control arm and data that demonstrate the efficacy of elotuzumab-containing therapies in patients previously treated with a CD38 antibody.	To address HA request to justify the benefit-risk of EPd in the CD38 antibody-exposed subgroup participants and to compare the benefit and safety to sequential treatment with an approved anti-CD38 antibody-based regimen.	Section 3.2.1.2. Rationale for Elotuzumab, Pomalidomide, and Dexamethasone as the Control Arm Regimen
Added an optional repeat bone marrow collection for participants who were initially minimal residual disease (MRD) positive and who remain in ≥very good partial response (VGPR) to reassess MRD status within 6 months of their initial MRD assessment.	To address HA feedback to allow for identification of late negativity in participants presenting complete response (CR), stringent CR, or prolonged VGPR (with a disappearance of any soft tissue plasmacytomas).	Table 13: Schedule of Events Section 9.2.2.5. Bone Marrow Aspirate and Core Bone Marrow Biopsy Comments column in: Table 15: Schedule of Events: Follow-up Period
Added a clarification that the 6-hour cutoff from the start of the linvoseltamab infusion for events to be considered infusion-related reaction (IRR) is not a validated criterion.	To address HA request to inform that the 6 hours cutoff to assist the differentiation of IRR from CRS (cytokine release syndrome) is not an established cutoff and is included for guidance only to the investigators. Assigning an adverse event as IRR or CRS remains the judgement of the investigator.	Section 8.3.2.2. Study Definitions of IRR and CRS
Revised the exclusion criteria for participants with history of allogeneic stem cell transplantation.	To address HA feedback to require a 6-week wash-out period for immunosuppressive medications in participants who received an allogeneic transplant.	Section 7.2.2. Exclusion Criteria (#5)
Added language from the pomalidomide (Imnovid®) Summary of Product Characteristics that includes contraception recommendations (revised the list of highly	To address HA feedback methods of contraception considered suitable for either treatment arm included.	Section 7.2.2. Exclusion Criteria (#27) Section 8.7.2. Permitted Medications and Procedures

VV-RIM-00312509-1.0 Approved - 18 Aug 2023 GMT-5:00

Description of Change	Brief Rationale	Section # and Name
effective contraceptive measures), potential risks, and prophylactic considerations. Added clarification that contraception methods should be practiced 4 weeks prior to the initial dose and during dose interruption.		
Revised the exclusion criterion that details contraceptive measures for women of childbearing potential (WOCBP) and sexually active male participants as follows: • Extended the period for male participants to not donate sperm from at least 3 months to 6 months (180 days) after the last dose. • Added a requirement for male participants to use condoms for at least 6 months after the last dose. • Added a requirement for female participants/ WOCBP to not donate ova during the study for at least 6 months after the last dose.	To address HA feedback to revise the duration for condom use and sperm donation for male participants and to add a restriction for ova donation for female participants/WOCBP.	Section 7.2.2. Exclusion Criteria (#27)
Added language to the exclusion criterion and prohibited medications to generalize vaccinations received within 1 week of the planned start of study medication to include other vaccines without the potential to replicate.	To address HA feedback that vaccines with non-replicating material (ie, all active vaccinations without live or live attenuated material) should be mentioned along with the Coronavirus Disease 19 vaccination.	Section 7.2.2. Exclusion Criteria (#12) Section 8.7. Concomitant Medications and Procedures Section 8.7.1. Prohibited Medications and Procedures
Personnel changes	To reflect changes in personnel involved in study oversight.	Title page

VV-RIM-00312509-1.0 Approved - 18 Aug 2023 GMT-5:00

Amendment 1

The primary purpose of this amendment is to address scientific advice from the Committee For Medicinal Products For Human Use (CHMP). Additional revisions address comments from other Health Authorities and Institutional Review Boards.

Description of Change	Brief Rationale	Section # and Name
Changed the patient population to include a requirement that participants enrolled in EU and UK must have previously received 2 to 4 prior lines of therapy, including a CD38 antibody.	Revisions have been incorporated in response to CHMP scientific advice to align the description of the patient population to the approved indication for the comparator and local clinical treatment guidelines.	Clinical Study Protocol Synopsis: Objective(s); Study Design; Population; Endpoint(s) Table 1: Study Objectives and Endpoints Section 3.1. Hypothesis Section 3.2.1. Rationale for Study Design Section 6.1. Study Description and Duration Figure 1: Study Flow Diagram Section 7.1. Number of Participants Planned Section 7.2. Study Population
Changed the primary analysis to compare PFS between linvoseltamab monotherapy and EPd in CD38 antibody-exposed patients. Revised the original primary objective to compare PFS between linvoseltamab monotherapy and EPd in all study participants to be a key secondary objective.	Revisions have been incorporated in response to CHMP scientific advice to address the concern regarding participant heterogeneity.	Clinical Study Protocol Synopsis: Objective(s); Study Design; Population; Endpoint(s); Statistical Hypothesis; Justification of Sample Size; Efficacy Analyses; Interim Analysis Table 1: Study Objectives and Endpoints Section 3.1. Hypothesis Section 3.2.1.2. Rationale for Elotuzumab, Pomalidomide, and Dexamethasone as the Control Arm Regimen Section 3.2.1.4. Rationale for Objectives and Endpoints Section 3.2.1.5. Rationale for Stratification Factors Section 7.1. Number of Participants Planned Section 11.1. Statistical Hypothesis Section 11.2. Justification of Sample Size Section 11.4.3.1. Primary Efficacy Analysis

VV-RIM-00312509-1.0 Approved - 18 Aug 2023 GMT-5:00

Description of Change	Brief Rationale	Section # and Name
		Section 11.4.3.2.1. Key Secondary Analyses Section 11.4.3.2.2. Other Secondary Analyses Section 11.4.4. Control of Multiplicity Section 11.5. Interim Analysis
Revised the requirements for the use of a monitored setting for linvoseltamab administration. 24-hour inpatient monitoring is also required for all participants during the intermediate dose in week 2 (cycle 1 day 8) and in week 3 (cycle 1 day 15) for participants who have not completed initial step-up dosing.	The change has been made in response to Health Authority (HA) feedback.	Section 3.2.1.8. Rationale for Timing and Duration of Hospitalization for linvoseltamab Treatment Section 8.1.1. Investigational Treatment: Linvoseltamab Monotherapy Figure 2: Arm 1: Linvoseltamab Dosing Schedule (footnote) Section 8.1.1.1. Use of a Monitored Setting for Linvoseltamab Administration
Removed provision to allow a legally acceptable representative to provide informed consent for a study participant.	The change has been made in response to central Institutional Review Board feedback.	Section 7.2.1. Inclusion Criteria #12
Revised testing for cytomegalovirus (CMV) during the study to add testing at certain timepoints during the study and as clinically indicated.	Testing was added to standardize CMV monitoring guidance during study.	Clinical Study Protocol Synopsis: Procedures and Assessments Section 8.2.4.1. Reasons for Permanent Discontinuation of Study Drug Section 8.3.4. B-Cell Depletion and Risk of Infection Table 13: Schedule of Events Section 9.2.3.7. Laboratory Testing
Updated guidance for male contraceptive use during the study and following the last dose of linvoseltamab	To align with the linvoseltamab Investigator's Brochure, version 5.	Section 7.2.2. Exclusion criteria #27 Section 10.1.3. Events that Require Expedited Reporting to Sponsor
Revised recommendation for restarting therapy after dose delay. Revised text to require participants with treatment delays >60 days due to grade 4 AEs to discontinue therapy.	The change has been made in response to Health Authority feedback.	Section 8.2.1. Linvoseltamab Dose Modification Table 7: Guidelines on Treatment Resumption After Dosing Delay

VV-RIM-00312509-1.0 Approved - 18 Aug 2023 GMT-5:00

Description of Change	Brief Rationale	Section # and Name
Revised the procedure for resuming treatment after a dose delay for linvoseltamab in arm 1 and elotuzumab, pomalidomide, and dexamethasone in arm 2.	Modified the language for arm 1 to match conduct in study R5458-ONC-1826 and to provide further details for treatment resumption after dosing delays in arm 2.	Section 8.2.3.1 Arm 1 (Linvoseltamab) Section 8.2.3.2 Arm 2 (Elotuzumab + Pomalidomide + Dexamethasone)
Added details for bone marrow aspirate and/or biopsy during the follow-up period.	Bone marrow aspirate collections were updated to provide clarity for the safety follow-up visit and bone marrow aspirate collections to confirm MRD for the efficacy follow-up visit.	Comments column in: Table 15: Schedule of Events: Follow-up Period
Revised the schedule of events for PK, immunogenicity, and pharmacodynamic samples to include additional timepoints for CRP and ferritin collection and removed day 30 post-last linvoseltamab collection timepoint.	To allow for additional analysis of CRP and ferritin during the treatment period and removed the PK collection on day 30 follow-up visit in Table 14 as day 22 is already included in Table 15.	Table 14: Schedule of Events: Pharmacokinetic, Immunogenicity, and Pharmacodynamic Sample Collection Timepoints
Revised MRD testing plan to calculate in participants who achieve CR or better and that additional analysis will include participants in prolonged VGPR (≥3 months) with a disappearance of any soft tissue plasmacytomas.	The change has been made in response to HA feedback.	Clinical Study Protocol Synopsis: Efficacy Analyses - Minimal Residual Disease Section 11.4.3.2.1.3 Minimal Residual Disease
Provided further details for the PK parameters and immunogenicity that will be assessed in the study.	To standardize PK and immunogenicity analysis across the linvoseltamab program.	Section 11.3.4.1. Antidrug Antibody Analysis Section 11.3.4.2. Neutralizing Antibody Analysis (new) Section 11.4.6. Pharmacokinetics Section 11.4.7 Analysis of Immunogenicity Data
Made administrative and minor editorial changes.	To improve consistency and clarity and correct typographical errors.	Throughout the document. Title page (amendment versioning, changed Clinical Scientist from Elena Maksimova to James Drew.)

VV-RIM-00312509-1.0 Approved - 18 Aug 2023 GMT-5:00

Description of Change	Brief Rationale	Section # and Name
		List of Abbreviations and Definitions of Terms Updated number of sites from 130 to 180 sites globally, as listed in the Clinical Study Protocol Synopsis Clarified that the Safety-follow-up visit on day 22 post last dose visit is the end of treatment visit in the table header of Table 15 (Schedule of Events: Follow-up Period) and in Section 9.1.2 (End of Treatment Visit).

VV-RIM-00312509-1.0 Approved - 18 Aug 2023 GMT-5:00

LIST OF ABBREVIATIONS AND DEFINITIONS OF TERMS

ADA	Antidrug antibody
AE	Adverse event
AESI	Adverse event of special interest
ALT	Alanine aminotransferase
ANC	Absolute neutrophil count
aPTT	Activated partial thromboplastin time
AST	Aspartate aminotransferase
BCMA	B-cell maturation antigen
β-hCG	Beta-human chorionic gonadotropin
BiTE	Bispecific T-cell engager
BP	Blood pressure
BPI-SF	Brief Pain Inventory-Short Form
CAR T	Chimeric antigen receptor T cell
CD3	Cluster of differentiation 3
CD38	Cluster of differentiation 38
CD269	Cluster of differentiation 269
CI	Confidence interval
C_{max}	Maximum (peak) concentration
CMV	Cytomegalovirus
CNS	Central nervous system
COVID-19	Coronavirus disease 19
CR	Complete response
CRF	Case report form (electronic or paper)
CRO	Contract research organization
CRP	C-reactive protein
CRS	Cytokine release syndrome
CT	Computed tomography
CTCAE	Common Terminology Criteria for Adverse Events
C_{trough}	Lowest concentration in a dosing interval
CYP450	Cytochrome P450
d	Dexamethasone
D	Darzalex® (Daratumumab)
Dd	Daratumumab plus dexamethasone
DIRA	Daratumumab interference reflex assay
DLT	Dose-limiting toxicity

VV-RIM-00312509-1.0 Approved - 18 Aug 2023 GMT-5:00

DOR	Duration of response
DRd	Daratumumab + Revlimid® (lenalidomide) + dexamethasone
DVd	Daratumumab + Velcade® (bortezomib) + dexamethasone
E	Elotuzumab
EC	Ethics Committee
ECG	Electrocardiogram
ECOG	Eastern Cooperative Oncology Group
EDC	Electronic data capture
EHA-ESMO	European Hematology Association and European Society for Medical Oncology
EMP	Extramedullary plasmacytoma
EOI	End of infusion
EPd	Elotuzumab, pomalidomide, and dexamethasone
ERd	Elotuzumab, lenalidomide, and dexamethasone
EU	European Union
FAS	Full analysis set
FBR	Future biomedical research
FIH	First-in-human
FLC	Free light chain
FSH	Follicle stimulating hormone
GCP	Good Clinical Practice
G-CSF	Granulocyte-colony stimulating factor
HBV	Hepatitis B virus
HCV	Hepatitis C virus
HIV	Human immunodeficiency virus
HR	Hazard ratio
HSV	Herpes simplex virus
IB	Investigator's Brochure
ICANS	Immune effector cell-associated neurotoxicity syndrome
ICE	Immune effector cell-associated encephalopathy
ICF	Informed consent form
ICH	International Council for Harmonisation
IgA	Immunoglobulin A
IgD	Immunoglobulin D
IgE	Immunoglobulin E
IgG	Immunoglobulin G
IgGκ	Immunoglobulin G kappa

VV-RIM-00312509-1.0 Approved - 18 Aug 2023 GMT-5:00

IgM	Immunoglobulin M
IMiD	Immunomodulatory imide drug
IMWG	International Myeloma Working Group
INR	International normalized ratio
IRB	Institutional Review Board
IRR	Infusion-related reaction
Isa	Isatuximab
Isad	Isatuximab plus dexamethasone
ISS	International Staging System
IRT	Interactive Response Technology
IV	Intravenous(ly)
K	Kyprolis® (Carfilzomib)
Kd	Carfilzomib plus dexamethasone
mAb	Monoclonal antibody
MedDRA	Medical Dictionary for Regulatory Activities
MM	Multiple myeloma
M protein	Monoclonal immunoglobulin
mPFS	Median progression-free survival
MRD	Minimal residual disease
MRI	Magnetic resonance imaging
MTD	Maximum tolerated dose
MUGA	Multigated acquisition scan
NAb	Neutralizing antibody
NCCN	National Comprehensive Cancer Network
NCI-CTCAE	National Cancer Institute-Common Terminology Criteria for Adverse Events
NGS	Next-generation sequencing
NK	Natural killer cell
OR	Odds ratio
ORR	Objective response rate
OS	Overall survival
P	Pomalidomide
PCR	Polymerase chain reaction
PD	Progressive disease
PE	Physical examination
PET	Positron emission tomography
PET-CT	Positron emission tomography-computed tomography
PFS	Progression-free survival

VV-RIM-00312509-1.0 Approved - 18 Aug 2023 GMT-5:00

PI	Proteasome inhibitor or inhibition
PJP	Pneumocystis jirovecii pneumonia
PK	Pharmacokinetic
PO	Orally
PR	Partial response
PRO	Patient-reported outcome
PT	Prothrombin time
PTT	Partial thromboplastin time
QW	Once a week/weekly
Q2W	Every 2 weeks
Q3W	Every 3 weeks
Q8W	Every 8 weeks
Q12W	Every 12 weeks
R	Revlimid® (lenalidomide)
RBC	Red blood cell
Rd	Revlimid® (lenalidomide) plus dexamethasone
Regeneron	Regeneron Pharmaceuticals, Inc.
RP2DR	Recommended phase 2 dose regimen
RRMM	Relapsed/refractory multiple myeloma
SAE	Serious adverse event
SAF	Safety analysis set
SAP	Statistical analysis plan
SAS	Statistical Analysis System
sBCMA	Soluble BCMA
SC	Subcutaneous
SIFE	Serum immunofixation
SLAMF7	Signaling lymphocytic activation molecule family member 7
SOC	System organ class
SPEP	Serum protein electrophoresis
SSET	Study Safety Evaluation Team
SUSAR	Suspected unexpected serious adverse reaction
T	Thalidomide
TEAE	Treatment-emergent adverse event
TIL	Tumor-infiltrating lymphocytes
TLS	Tumor lysis syndrome
TNS	Tumor necrosis factor
TNFRSF17	Tumor necrosis factor receptor superfamily member 17

VV-RIM-00312509-1.0 Approved - 18 Aug 2023 GMT-5:00

Tregs	Regulatory T cells
UK	United Kingdom
ULN	Upper limit of normal
UPEP	Urine protein electrophoresis
US	United States
V	Velcade® (bortezomib)
Vd	Velcade® (bortezomib) plus dexamethasone
VGPR	Very good partial response
WBC	White blood cell
WOCBP	Women of childbearing potential

VV-RIM-00312509-1.0 Approved - 18 Aug 2023 GMT-5:00

TABLE OF CONTENTS

AMENDMENT HISTORY 3
LIST OF ABBREVIATIONS AND DEFINITIONS OF TERMS 9
CLINICAL STUDY PROTOCOL SYNOPSIS 23
1. INTRODUCTION 33
1.1. Overview of Multiple Myeloma 33
1.2. Unmet Medical Need in Relapsed/Refractory Multiple Myeloma 33
1.3. B-cell Maturation Antigen as a Molecular Target for Multiple Myeloma 34
1.4. Linvoseltamab (REGN5458) 36
1.4.1. Clinical Overview from First-in-Human Study 36
1.5. Pomalidomide-containing Therapy Including Combination Therapy with Elotuzumab, Pomalidomide, and Dexamethasone (EPd) 37
2. STUDY OBJECTIVES AND ENDPOINTS 39
3. HYPOTHESIS AND RATIONALE 42
3.1. Hypothesis 42
3.2. Rationale 42
3.2.1. Rationale for Study Design 42
3.2.1.1. Rationale for Patient Population 42
3.2.1.2. Rationale for Elotuzumab, Pomalidomide, and Dexamethasone as the Control Arm Regimen 42
3.2.1.3. Rationale for Linvoseltamab Monotherapy as the Experimental Arm 44
3.2.1.4. Rationale for Objectives and Endpoints 44
3.2.1.5. Rationale for Stratification Factors 45
3.2.1.6. Rationale for Treatment to Progression 46
3.2.1.7. Rationale for Bone Marrow Aspirate and Biopsy 46
3.2.1.8. Rationale for Timing and Duration of Hospitalization for Linvoseltamab Treatment 46
3.2.2. Rationale for Dose Selection 47
3.2.3. Rationale for Decreasing Dosing Frequency for Patients Treated with Linvoseltamab for 24 Weeks 48
3.3. Risk-Benefit 48
3.3.1. Risk-Benefit Assessment for Linvoseltamab Monotherapy 48
3.3.1.1. Linvoseltamab Risk Assessment 49
3.3.1.2. Linvoseltamab Benefit Assessment 51

VV-RIM-00312509-1.0 Approved - 18 Aug 2023 GMT-5:00

3.3.2. Risk-Benefit Assessment for the Combination of Elotuzumab, Pomalidomide, and Dexamethasone 51
3.3.2.1. COVID-19 Consideration 51
3.3.3. Overall Risk-Benefit Conclusion 52
4. ENDPOINTS 53
5. STUDY VARIABLES 54
5.1. Demographic and Baseline Characteristics 54
5.2. Efficacy Variables 54
5.3. Safety Variables 54
5.4. Pharmacokinetic Variables 54
5.5. Immunogenicity Variables 55
5.6. Pharmacodynamic and Other Biomarker Variables 55
5.7. Patient-Reported Outcome Variables 55
5.7.1. Variables from BPI-SF 55
5.7.2. Variables from EORTC QLQ-C30 56
5.7.3. Variables from EORTC QLQ-MY20 57
5.7.4. Variables from EQ-5D-5L 57
5.7.5. Variables from PRO-CTCAE and FACIT GP5 57
6. STUDY DESIGN 58
6.1. Study Description and Duration 58
6.1.1. Study Stopping Rules 59
6.1.1.1. Individual Patient Stopping Rules 59
6.1.1.2. Study Stopping Criteria 59
6.1.2. End of Study Definition 60
6.2. Planned Interim Analysis 60
6.3. Study Committees 60
6.3.1. Study Steering Committee 60
6.3.2. Independent Data Monitoring Committee 60
6.3.3. Independent Review Committee 60
7. SELECTION, WITHDRAWAL, AND REPLACEMENT OF PARTICIPANTS 61
7.1. Number of Participants Planned 61
7.2. Study Population 61

VV-RIM-00312509-1.0 Approved - 18 Aug 2023 GMT-5:00

7.2.1. Inclusion Criteria 61
7.2.2. Exclusion Criteria 63
7.3. Premature Withdrawal from the Study 66
7.4. Replacement of Participants 66
8. STUDY TREATMENTS 67
8.1. Investigational and Reference Treatments 67
8.1.1. Investigational Treatment: Linvoseltamab Monotherapy 68
8.1.1.1. Use of a Monitored Setting for Linvoseltamab Administration 69
8.1.1.2. Premedication for Linvoseltamab Administration 69
8.1.2. Comparator Treatment: Elotuzumab/Pomalidomide/Dexamethasone (EPd) 70
8.2. Dose Modification and Study Treatment Discontinuation Rules 71
8.2.1. Linvoseltamab Dose Modification 71
8.2.2. Dose Modification and Study Drug Discontinuation for Elotuzumab, Pomalidomide, and Dexamethasone 73
8.2.2.1. Dose Modification and Study Drug Discontinuation for Elotuzumab 73
8.2.2.2. Dose Modification and Study Drug Discontinuation for Pomalidomide 73
8.2.3. Resuming Treatment After Dose Delay 74
8.2.3.1. Arm 1 (Linvoseltamab) 74
8.2.3.2. Arm 2 (Elotuzumab + Pomalidomide + Dexamethasone) 74
8.2.4. Study Drug Discontinuation 75
8.2.4.1. Reasons for Permanent Discontinuation of Study Drug 75
8.3. Safety Monitoring and Management of Specific Toxicities and Acute Reactions 76
8.3.1. Acute Allergic/Hypersensitivity Reactions 77
8.3.1.1. Interruption of the Intravenous Infusion 77
8.3.1.2. Termination of the Intravenous Infusion 78
8.3.2. Grading and Management of Infusion-Related Reaction and Cytokine Release Syndrome 78
8.3.2.1. IRR and CRS: General Considerations 78
8.3.2.2. Study Definitions of IRR and CRS 79
8.3.2.3. Management of IRR and CRS 79
8.3.3. Central Nervous System Toxicity/ICANS Events 84
8.3.3.1. Study Definition of ICANS 84

VV-RIM-00312509-1.0 Approved - 18 Aug 2023 GMT-5:00

8.3.3.2. Management of ICANS 85
8.3.4. B-Cell Depletion and Risk of Infection 86
8.3.5. Tumor Lysis Syndrome 86
8.4. Method of Treatment Assignment 87
8.5. Blinding/Masking 87
8.6. Treatment Logistics and Accountability 87
8.6.1. Packaging, Labeling, and Storage 87
8.6.2. Supply and Disposition of Treatments 87
8.6.3. Treatment Accountability 88
8.6.4. Treatment Compliance 88
8.7. Concomitant Medications and Procedures 88
8.7.1. Prohibited Medications and Procedures 89
8.7.2. Permitted Medications and Procedures 89
9. STUDY SCHEDULE OF EVENTS AND PROCEDURES 91
9.1. Schedule of Events 91
9.1.1. Visit Schedules After Dose Delay 105
9.1.2. End of Treatment Visit 105
9.1.3. Unscheduled Visits 105
9.2. Study Procedures 106
9.2.1. Procedures Performed Only at the Screening/Baseline Visit 106
9.2.2. Efficacy Procedures 106
9.2.2.1. Disease Assessment (Overall Response Assessment) 107
9.2.2.2. Whole Body Imaging 107
9.2.2.3. Plasmacytoma Assessment 107
9.2.2.4. Plasmacytoma Biopsy 109
9.2.2.5. Bone Marrow Aspirate and Core Bone Marrow Biopsy 109
9.2.2.6. Minimal Residual Disease 110
9.2.2.7. Overall Survival Data Collection 110
9.2.3. Safety Procedures 111
9.2.3.1. Body-Weight 111
9.2.3.2. Vital Signs 111
9.2.3.3. Physical Examination 112
9.2.3.4. Neurologic Examination 112

VV-RIM-00312509-1.0 Approved - 18 Aug 2023 GMT-5:00

9.2.3.5. Electrocardiogram 112
9.2.3.6. Pomalidomide Pregnancy Prevention 112
9.2.3.7. Laboratory Testing 113
9.2.3.8. ECOG Status 114
9.2.4. Drug Concentration and Soluble BCMA Measurements 114
9.2.5. Immunogenicity Measurements and Samples 115
9.2.6. Pharmacodynamic and Exploratory Biomarker Procedures 115
9.2.6.1. Peripheral Blood Biomarkers 115
9.2.6.2. Cytokines in Serum and Other Biomarkers 115
9.2.6.3. Bone Marrow Exploratory Analyses 116
9.2.7. Future Biomedical Research (Optional) 116
9.2.8. Pharmacogenomic Analysis 116
9.2.9. PRO Assessment Procedures 117
10. SAFETY EVALUATION AND REPORTING 120
10.1. Recording and Reporting Adverse Events 120
10.1.1. General Guidelines 120
10.1.2. Reporting Procedure 121
10.1.2.1. Individual Case Safety Reporting (ICSR) 121
10.1.3. Events that Require Expedited Reporting to Sponsor 121
10.1.4. Other Adverse Events of Special Interest that do not Require Expedited Reporting to Sponsor 122
10.1.5. Abnormal Laboratory, Vital Signs, or Electrocardiogram Results 122
10.2. Definitions 123
10.2.1. Adverse Event 123
10.2.2. Serious Adverse Event 123
10.2.3. Adverse Events of Special Interest 124
10.2.4. Infusion Reactions 124
10.2.5. Severity 124
10.2.6. Causality 125
10.3. Safety Monitoring 126
10.4. Notifying Health Authorities, Institutional Review Board /Ethics Committee, and Investigators 126
11. STATISTICAL PLAN 127

VV-RIM-00312509-1.0 Approved - 18 Aug 2023 GMT-5:00

11.1. Statistical Hypothesis....127
11.2. Justification of Sample Size....127
11.3. Analysis Sets....129
11.3.1. Efficacy Analysis Sets....129
11.3.2. Safety Analysis Set....129
11.3.3. Pharmacokinetic Analysis Sets....129
11.3.4. Immunogenicity Analysis Sets....129
11.3.4.1. Antidrug Antibody Analysis....129
11.3.4.2. Neutralizing Antibody Analysis....129
11.3.5. Patient-Reported Outcome Analysis Sets....129
11.3.6. Biomarker Analysis Set....129
11.4. Statistical Methods....130
11.4.1. Participant Disposition....130
11.4.2. Demography and Baseline Characteristics....130
11.4.3. Efficacy Analyses....130
11.4.3.1. Primary Efficacy Analysis....130
11.4.3.2. Secondary Efficacy Analysis....131
11.4.4. Control of Multiplicity....134
11.4.5. Safety Analysis....136
11.4.5.1. Adverse Events....136
11.4.5.2. Other Safety....136
11.4.5.3. Treatment Exposure....137
11.4.5.4. Treatment Compliance....137
11.4.6. Pharmacokinetics....137
11.4.6.1. Analysis of Drug Concentration Data....137
11.4.7. Analysis of Immunogenicity Data....137
11.4.7.1. Analysis of Antidrug Antibody Status....137
11.4.7.2. Analysis of Neutralizing Antibody Data....138
11.4.8. Analysis of Pharmacodynamic and Exploratory Biomarker Data....138
11.4.9. Analysis of Quality of Life Data....138
11.5. Interim Analysis....139
12. QUALITY CONTROL AND QUALITY ASSURANCE....140
12.1. Data Management and Electronic Systems....140

VV-RIM-00312509-1.0 Approved - 18 Aug 2023 GMT-5:00

12.1.1. Data Management 140
12.1.2. Electronic Systems 140
12.2. Study Monitoring 140
12.2.1. Monitoring of Study Sites 140
12.2.2. Source Document Requirements 141
12.2.3. Case Report Form Requirements 141
12.3. Audits and Inspections 141
12.4. Study Documentation 142
12.4.1. Certification of Accuracy of Data 142
12.4.2. Retention of Records 142
12.4.3. Recruitment Strategy 142
12.4.4. Data Protection 143
13. ETHICAL AND REGULATORY CONSIDERATIONS 144
13.1. Good Clinical Practice Statement 144
13.2. Informed Consent 144
13.3. Participants Confidentiality and Data Protection 144
13.4. Institutional Review Board/Ethics Committee 145
13.5. Clinical Study Data Transparency 145
14. PROTOCOL AMENDMENTS 146
15. PREMATURE TERMINATION OF THE STUDY OR CLOSE-OUT OF A SITE 147
15.1. Premature Termination of the Study 147
15.2. Close-out of a Site 147
16. CONFIDENTIALITY 147
17. FINANCING AND INSURANCE 147
18. PUBLICATION POLICY 147
19. REFERENCES 148
20. INVESTIGATOR'S AGREEMENT 156
SIGNATURE OF SPONSOR'S RESPONSIBLE OFFICERS 164

VV-RIM-00312509-1.0 Approved - 18 Aug 2023 GMT-5:00

LIST OF TABLES

Table 1: Study Objectives and Endpoints 39
Table 2: Risks Assessment of Linvoseltamab 49
Table 3: Stratification Factors 59
Table 4: Study Interventions Administered 67
Table 5: Premedication for Linvoseltamab Administration During Cycle 1 (Step-up and the first two full doses) 69
Table 6: Dosing Schedule for Elotuzumab (in mg/kg) in Combination with Pomalidomide and Dexamethasone (mg) 70
Table 7: Guidelines on Treatment Resumption After Dosing Delay 72
Table 8: Pomalidomide Dose Modifications for Hematologic Adverse Reactions 74
Table 9: Cytokine Release Syndrome Toxicity Grading 80
Table 10: Management Guidance and Linvoseltamab Dosing in Setting of Cytokine-Mediated Toxicities & Infusion Related Reactions 81
Table 11: Additional Guidelines for Administration of Anticytokine Therapy (eg, Tocilizumab) and Corticosteroids in Setting of Cytokine Release Syndrome 84
Table 12: Management Guidance and Linvoseltamab Dosing in Setting of ICANS 85
Table 13: Schedule of Events 92
Table 14: Schedule of Events: Pharmacokinetic, Immunogenicity, and Pharmacodynamic Sample Collection Timepoints 102
Table 15: Schedule of Events: Follow-up Period 103
Table 16: Lesion Definitions and Imaging Assessment Schedule 108
Table 17: Grading System for Adverse Events 124
Table 18: Censoring Rules for PFS - Primary Efficacy Analysis 130
Table 19: Details of the Interim and Final PFS Analyses in All Study Participants 135
Table 20: Details of the Interim and Final OS Analyses in Participants Previously Exposed to CD38 Antibodies 135
Table 21: Details of the Interim and Final OS Analyses in All Study Participants 135

VV-RIM-00312509-1.0 Approved - 18 Aug 2023 GMT-5:00

LIST OF FIGURES

Figure 1: Study Flow Diagram 58
Figure 2: Arm 1: Linvoseltamab Dosing Schedule 68
Figure 3: Arm 2: Elotuzumab + Pomalidomide + Dexamethasone Dosing Schedule 71

LIST OF APPENDICES

APPENDIX 1. INTERNATIONAL MYELOMA WORKING GROUP RESPONSE CRITERIA 157
APPENDIX 2. INTERNATIONAL STAGING SYSTEM (ISS) FOR MM 160
APPENDIX 3. STANDARD RISK FACTORS FOR MM AND THE R-ISS 161
APPENDIX 4. IMMUNE EFFECTOR CELL-ASSOCIATED ENCEPHALOPATHY SCORE TO SCREEN FOR IMMUNE EFFECTOR CELL-ASSOCIATED NEUROTOXICITY SYNDROME 162
APPENDIX 5. PAIN MEDICATION ALGORITHM (MODIFIED AQA) 163

VV-RIM-00312509-1.0 Approved - 18 Aug 2023 GMT-5:00

CLINICAL STUDY PROTOCOL SYNOPSIS

Title	An Open-label, Randomized, Phase 3 Study of Linvoseltamab (REGN5458; anti-BCMA x anti-CD3 Bispecific Antibody) Versus the Combination of Elotuzumab, Pomalidomide, and Dexamethasone (EPd), in Patients with Relapsed/Refractory Multiple Myeloma (LINKER-MM3)
Short Title	Open-Label Randomized study to evaluate linvoseltamab versus EPd in R/R Multiple Myeloma
Site Location(s)	Approximately 180 sites globally

Objective(s)	The primary objective of this study is to compare progression-free survival (PFS) per the Independent Review Committee (IRC) between linvoseltamab monotherapy and EPd in randomized participants previously treated with CD38 antibodies.
	
	The key secondary objectives are:
	• To compare PFS per the IRC between linvoseltamab monotherapy and EPd in all study participants.
	• The key secondary objectives for evaluation in CD38 antibody-exposed participants and separately in all participants on study are:
	  o To compare the anti-tumor activity per IRC between linvoseltamab monotherapy and EPd as measured by:
	  ▪ objective response
	  ▪ ≥very good partial response (VGPR)
	  ▪ ≥complete response (CR)
	  o To compare the incidence of minimal residual disease (MRD) negative status (10^{-5}) in the bone marrow between linvoseltamab monotherapy and EPd
	  o To compare overall survival (OS) between linvoseltamab monotherapy and EPd
	  o To evaluate the treatment effects on pain symptom between linvoseltamab monotherapy and EPd
	
	Other secondary objectives to be performed in CD38 antibody-exposed participants and separately in all participants on study are:
	• To evaluate the safety and tolerability of linvoseltamab monotherapy compared to EPd
	• To compare PFS per the investigator between participants treated with linvoseltamab monotherapy and EPd.
	• To compare the anti-tumor activity per the investigator between linvoseltamab monotherapy and EPd as measured by:
	  o Objective response
	  o ≥VGPR

VV-RIM-00312509-1.0 Approved - 18 Aug 2023 GMT-5:00

	○ ≥CR • To evaluate duration of response (DOR) per investigator and IRC for participants achieving objective response on linvoseltamab monotherapy and on EPd • To evaluate the duration of MRD negative status in the bone marrow in participants receiving linvoseltamab monotherapy and EPd • To evaluate the time to response for participants with response ≥PR for linvoseltamab monotherapy and EPd • To evaluate the pharmacokinetics (PK) of linvoseltamab • To evaluate the immunogenicity of linvoseltamab • To evaluate the effects on patient-reported quality of life (QoL), functioning and symptoms between linvoseltamab monotherapy and EPd
Study Design	This is an open-label phase 3, randomized, active controlled study designed to evaluate the efficacy and safety of linvoseltamab monotherapy vs EPd in participants with relapsed/refractory multiple myeloma (RRMM) who have received 1 to 4 prior lines of therapy including a proteasome inhibitor and lenalidomide. Participants in the European Union (EU) and the United Kingdom (UK) must have previously received 2 to 4 prior lines of therapy, including a CD38 antibody. A total of approximately 300 eligible participants, including approximately 230 participants who have prior CD38 antibody exposure, will be randomized in a 1:1 ratio to the investigational arm (linvoseltamab monotherapy) or the active control arm, EPd. Randomization will be stratified according to: • the study participant's prior exposure to CD38 monoclonal antibody and time since last administration of a CD38 antibody as follows: CD38 antibody ≤4 months prior to randomization vs CD38 antibody >4 months prior to randomization vs no prior CD38 antibody • a composite of ISS Stage and extramedullary plasmacytomas (EMPs) as follows: participants with either International Staging System (ISS) Stage III and/or the presence of EMPs (EMP+) vs ISS Stage I/II/missing AND no EMPs (EMP-) Up to 20% of participants may have EMPs at baseline. Participants should begin treatment in the assigned arm within 3 days from randomization. All study participants will be treated until either disease progression, or another protocol-defined discontinuation criterion has been met.
Study Duration	The duration of the study will vary for individual participants and includes: • Screening period: up to 28 days. After screening, upon eligibility assessment, participants will be randomized in a 1:1 ratio to either the investigational arm (linvoseltamab monotherapy) or the active control arm, EPd. • Treatment period: variable duration.

VV-RIM-00312509-1.0 Approved - 18 Aug 2023 GMT-5:00

	○ Participants randomized to the linvoseltamab treatment arm will receive weekly linvoseltamab for 3 cycles (1 cycle = 28 days), followed by Q2W linvoseltamab administrations starting at cycle 4, until disease progression or until any criterion of study drug discontinuation is met. Beyond cycle 6, (week 24) for participants who achieve VGPR or better, the frequency of study drug administration will be decreased to every 4-week (Q4W) intervals. Participants on study after cycle 6 who do not achieve response of VGPR or better will continue with Q2W dosing until achieving VGPR or better. ○ Participants randomized to the EPd arm will be treated per package insert, until disease progression or until any criterion of study drug discontinuation is met. • Follow-up period: variable duration. The follow-up period consists of a safety follow-up period (approximately 12 weeks [ie, 90 days]) and an efficacy follow-up period (until recurrence, start of subsequent MM therapy, or death). • Survival status: variable duration. Participants who discontinue from the follow-up period but have not withdrawn consent will continue survival follow-up until death, loss to follow-up, participant withdrawal of consent for follow-up, or study termination by the sponsor, whichever is earlier. Participants may be followed remotely for survival information
End of Study Definition	The definition for end of study (trial) is the date of global last participant's last visit, or the date of withdrawal from the study, or lost to follow-up (ie, the study participant can no longer be contacted by the investigator). The end of study for an individual participant will be at the end of survival follow-up. All participants will continue survival follow-up until death, loss to follow-up, withdrawal of consent for follow-up, or study termination by the sponsor, whichever is earlier. The sponsor has the right to terminate the study at any time.
Population	
Sample Size:	A total of approximately 300 participants, including approximately 230 participants who have prior CD38 antibody exposure, are planned for this study.
Target Population:	Participants with multiple myeloma (MM) who have received at least 1 and no more than 4 prior lines of anti-neoplastic MM therapies including lenalidomide and a proteasome inhibitor and demonstrated disease progression on or after the last therapy as defined by the 2016 IMWG criteria. Participants who have received only 1 prior line of antimyeloma therapy must be lenalidomide refractory (including participants with progression on or within 60 days of the last dose of lenalidomide given as maintenance). Participants in the EU and the UK must have previously received 2 to 4 prior lines of therapy, including a CD38 antibody. Participants must have the following measurable disease for response assessment as per the 2016 IMWG response assessment criteria.

VV-RIM-00312509-1.0 Approved - 18 Aug 2023 GMT-5:00

Measurable disease is defined as 1 or more of the following:

- Serum M-protein 5 g/L (≥0.5 g/dL)
- Urine M-protein ≥200 mg/24 hr
- Free light chain (FLC) assay with involved FLC level ≥100 mg/L (10 mg/dL) with an abnormal serum FLC ratio (normal ratio 0.26 to 1.65)
- Quantitative immunoglobulin levels of ≥500 mg/dL (≥0.5 g/dL; Immunoglobulin A [IgA] and IgD myeloma only). Note: For participants with IgA and IgD myelomas, quantitative immunoglobulin measurements will be used to monitor disease and response.

In addition, participants must have evidence of adequate bone marrow reserves and adequate hepatic, renal, and cardiac function.

Treatment(s)

Study Drug Linvoseltamab (REGN5458)

Dose/Route/Schedule: Linvoseltamab for IV infusion will be supplied by the sponsor as a liquid in sterile, single-use vials. Each vial will contain linvoseltamab at a concentration of 10 mg/mL. A pharmacist or other qualified individual will be identified at each site to prepare linvoseltamab for administration.

Comparator Drug Elotuzumab

Dose/Route/Schedule: 10 mg/kg QW on cycle 1 and 2 and 20 mg/kg Q4W Cycle 3 onwards. Elotuzumab for IV infusion will be provided as vials in cartons.

Comparator Drug Pomalidomide

Dose/Route/Schedule: 4 mg orally (PO) once a day (QD) from day 1-21 per cycle (may be reduced to 3 mg, 2 mg, or 1 mg QD). Pomalidomide oral capsules will be provided in blisters in cartons.

Comparator Drug Dexamethasone

Dose/Route/Schedule: Dexamethasone oral or IV will be provided in bottles, cartons, vials, or ampoules.

Endpoint(s)

Primary: PFS per International Myeloma Working Group (IMWG) response criteria (Kumar, 2016) as determined by IRC (in participants who have previously received CD38 antibodies)

Key Secondary:

- PFS per International Myeloma Working Group (IMWG) response criteria (Kumar, 2016) as determined by IRC (in all study participants)

The other key secondary analyses to be performed separately in the anti-CD38 treated population and all participants on study are

VV-RIM-00312509-1.0 Approved - 18 Aug 2023 GMT-5:00

- Objective response per IMWG response criteria (Kumar, 2016) (Rajkumar, 2011), as determined by IRC, for each of the following categories
  - ≥PR
  - ≥VGPR
  - ≥CR
- MRD negative status
- OS
- Mean change from baseline at week 12 in the worst pain score, measured by BPI-SF Item 3, considering increased analgesic use (as measured by the modified AQA) as a poor outcome (composite strategy)

Other Secondary:

- Incidence and severity of treatment-emergent adverse events (TEAEs) including adverse events of special interest (AESI) and serious adverse events (SAEs)
- PFS per IMWG response criteria (Kumar, 2016), as determined by investigator
- Objective response per IMWG response criteria (Kumar, 2016) (Rajkumar, 2011) as determined by investigator for each of the following categories
  - ≥PR
  - ≥VGPR
  - ≥CR
- DOR, as per IMWG response criteria (Kumar, 2016) (Rajkumar, 2011), as determined by investigator and IRC.
- Duration of MRD negative status in the bone marrow
- Time from randomization to objective response (≥PR) as per IMWG response criteria (Kumar, 2016) (Rajkumar, 2011) as determined by IRC and investigator
- Concentrations of linvoseltamab in serum over time
- Incidence and titer of antidrug antibodies (ADAs) and incidence of neutralizing antibodies (NAbs) to linvoseltamab over time
- Pain response rate, measured by the proportion of pain responders at week 12, as defined by at least a 2-point reduction from baseline in the BPI-SF Item 3 without an increase in analgesic use
- Mean change from baseline in patient-reported global health status/QoL, functioning per EORTC QLQ-C30, and disease symptoms per EORTC QLQ-MY20, PGIS, and PGIC
- Mean change from baseline in patient-reported general health status per EQ-5D-5L

Procedures and Assessments	Screening: medical/oncology history, demographics, complete physical examination, height, International Staging System stage (ISS; β2-

VV-RIM-00312509-1.0 Approved - 18 Aug 2023 GMT-5:00

	microglobulin and albumin), revised ISS (ISS + chromosomal abnormalities and lactate dehydrogenase), echocardiogram or Multi-gated acquisition scan (cardiac ejection fraction), viral serologies (HIV, HBV, and HCV testing), CMV PCR testing, coagulation parameters: (prothrombin time [international normalized ratio] and activated partial thromboplastin time or partial thromboplastin time). Safety: Vital signs, physical examination, brief neurologic examinations weight, electrocardiogram, Eastern Cooperative Oncology Group status, laboratory assessments, adverse events (AEs), concomitant medications. Efficacy: Serum protein electrophoresis (SPEP), urine protein electrophoresis (UPEP), 24-hour urine sample, serum and urine immunofixation, serum-free light chain (FLC) testing, bone marrow aspirate/biopsy, immunoglobulin quantification (immunoglobulin A [IgA], immunoglobulin D [IgD]), whole body imaging, plasmacytoma assessment (measurement by clinical examination, and/or radiological examination [biopsy as clinically indicated], if relevant), MRD, and survival status. Biomarker assessments and patient-reported outcome (PRO) measurements. Blood samples for drug concentration analysis and ADA assessment in serum will be collected.
Statistical Plan	
Statistical Hypothesis	Treatment with linvoseltamab monotherapy will improve PFS compared to EPd in participants with RRMM who have been previously exposed to CD38 antibodies. Therefore, the primary statistical test of hypotheses is set up as H0: PFS HR = 1 vs H1: PFS HR <1 in participants who have been previously exposed to CD38 antibodies. A key secondary hypothesis is that treatment with linvoseltamab monotherapy will improve PFS compared to EPd in all study participants with RRMM. Therefore, a secondary statistical test of hypotheses is set up as H0: PFS HR = 1 vs H1: PFS HR <1 in all study participants. PFS will be measured using the IMWG criteria per IRC.
Justification of Sample Size	Assuming a true HR ≤0.6, at least 138 total PFS events are needed for 85% power to reject the primary null hypothesis (HR = 1) in favor of the alternative hypothesis (HR <1) at the 2-sided 0.05 level of significance (alpha) using a log-rank test for the primary PFS comparison in participants who have been previously exposed to CD38 antibodies. Assuming a true HR ≤0.667, at least 196 total PFS events are needed for 80% power to reject the secondary null hypothesis (HR = 1) in favor of the alternative hypothesis (HR <1) at the 2-sided 0.05 level of significance (alpha) using a log-rank test for the secondary PFS comparison in all study participants. The independent statistical group supporting IDMC activities will track the number of events for the primary and secondary PFS analyses to determine when efficacy comparisons between arms may be conducted. Approximately 230 participants, who have been previously exposed to CD38 antibodies, with 1:1 randomization is expected to yield the required 138 PFS events for the primary analysis.

VV-RIM-00312509-1.0 Approved - 18 Aug 2023 GMT-5:00

	Approximately a total of 300 participants with 1:1 randomization is expected to yield the required 196 PFS events for the secondary comparison of PFS.
Efficacy Analyses	The full analysis set (FAS) includes all randomized participants, based on the intention-to-treat (ITT) principle (also called the ITT population). The FAS will be used for efficacy analyses. <u>Primary Efficacy Analysis:</u> The PFS endpoint will be determined through blinded independent central review (BICR) by an IRC per IMWG criteria (Kumar, 2016). PFS comparison will be conducted using a two-sided log-rank test stratified by variables defined in the study design section. A point estimate of the HR along with its corresponding 2-sided 95% CI will be produced based on a Cox proportional hazards model with Efron's method for tie handling using the treatment and stratifications defined in the protocol as covariates. PFS curves, PFS medians with 95% Cis, and PFS rates at 3, 6, 9, and 12 months with 95% Cis will be estimated using the Kaplan-Meier method. The primary analysis of PFS data, in participants who have been previously exposed to CD38 antibodies, is planned when the earlier of the following two conditions are met: • There are at least 138 total PFS events observed in both arms combined, or • There are at least 81 PFS events observed in the control arm alone. <u>Secondary Efficacy Analyses:</u> Overall Response Rate: ORR is defined as the proportion of participants who achieve a best overall response of PR or better based on FAS population. ORR analysis will be conducted in participants who have been previously exposed to CD38 antibodies and in all study participants separately. ORR will be compared between the 2 arms using the Cochran-Mantel-Haenszel test stratified by the aforementioned stratification factors. Associated odds ratios (OR) and 95% Cis will be provided. In addition, the ORR and the corresponding 95% Cis for each arm will be calculated using the Clopper-Pearson method. The VGPR-or-better rate is defined as the proportion of participants who achieve a best overall response of VGPR or better based on ITT population. The VGPR-or-better rate will be analyzed in participants who have been previously exposed to CD38 antibodies and in all study participants separately using the same method as that of ORR. Minimal Residual Disease: Rate of achieving MRD negative disease status (MRD-negativity) is defined as the proportion of participants in the ITT population who achieve post-baseline MRD negativity at the 10^{-5} threshold of CR or better per IMWG criteria. Additionally, analyses will include the rate of MRD negativity among participants who achieved prolonged VGPR for ≥3 months with disappearance of any soft tissue plasmacytomas. The rates will be summarized for participants who have been previously exposed to CD38 antibodies and in all study participants separately. The MRD negativity rate will be analyzed using the same method as ORR.

VV-RIM-00312509-1.0 Approved - 18 Aug 2023 GMT-5:00

Progression-free Survival:
The secondary analysis of PFS data in all study participants is planned when the earlier of the following two conditions are met:

- There are at least 196 total PFS events observed in both arms combined, or
- There are at least 115 PFS events observed on the control arm alone.

One interim analysis of PFS in all study participants will be performed when the primary efficacy analysis of PFS in prior anti-CD38 exposed participants is conducted (See below).

Overall Survival:
OS is measured from randomization until death due to any cause. If the survival status of a participant is not known, OS will be censored at the last date that the participant is documented to be alive. The OS comparing the two arms will be analyzed using the same method for the primary PFS per IRC. OS curves, OS medians with 95% Cis, and OS rates at 6, 12, 18, and 24 months with 95% Cis will be estimated using Kaplan-Meier method. OS will be analyzed in participants who have been previously exposed to CD38 antibodies after a total of 153 deaths have been observed. OS will be analyzed in participants who have been previously exposed to CD38 antibodies after a total of 153 deaths have been observed. OS will be analyzed in all study participants after a total of 176 deaths have been observed.

Pain PRO:
Pain key secondary endpoint is defined as the mean change from baseline at week 12 in the worst pain score, as measured by BPI-SF Item 3. A composite strategy will be employed for the intercurrent event of increase in analgesic use when this occurs before week 12. For participants who report an increase in analgesic use at an assessment timepoint a penalty will be applied to the BPI-SF Item 3 score. An analysis of covariance (ANCOVA) analysis will be performed to evaluate whether there is a significant difference in the mean change from baseline at week 12 between linvoseltamab monotherapy arm and EPd arm on patient-reported pain as measured by BPI-SF Item 3. Pain PRO will be analyzed in participants who have been previously exposed to CD38 antibodies and all study participants separately.

Duration of Response:
DOR (per IRC or per investigator) is defined for responders (participants with a best overall response of PR or above) only. It is the time from the date of the first documented response (PR or above) until the date of first documented disease progression, or death due to any cause, whichever occurs first. For participants who neither progress nor die, the DOR will be censored at the same time as they were censored for the primary PFS.

DOR for each treatment arm will be estimated using the Kaplan-Meier Method, if applicable. Median DOR and its corresponding 95% CI will be reported.

DOR will be summarized by treatment arm in participants who have been previously exposed to CD38 antibodies and in all study participants separately.

<u>Control of Multiplicity</u>
A hierarchical testing plan will be used to strictly control the family wise Type I error rate at the 2-sided 5% level. PFS in study participants who have previously been exposed to CD38 antibodies will be tested first at a two-sided Type I error of 0.05 and the key secondary endpoints will be tested sequentially

VV-RIM-00312509-1.0 Approved - 18 Aug 2023 GMT-5:00

in the following pre-specified order, at the same alpha level. In other words, a key secondary endpoint may be formally tested once all endpoints listed above it achieve statistical significance with the pain PRO endpoint to be tested at the end of the sequence.

In participants who have previously received CD38 antibodies:

- ORR per IMWG criteria determined by an IRC
- Rate of VGPR or better response per IMWG criteria determined by an IRC
- Rate of CR or better response per IMWG criteria determined by an IRC
- Rate of MRD negativity

In all study participants:

- PFS
- ORR per IMWG criteria determined by an IRC
- Rate of VGPR or better response per IMWG criteria determined by an IRC
- Rate of CR or better response per IMWG criteria determined by an IRC
- Rate of MRD negativity

In participants who have previously received CD38 antibodies and in all study participants sequentially:

- OS in participants who have previously received CD38 antibodies
- OS in all study participants
- Pain PRO in participants who have previously received CD38 antibodies
- Pain PRO in all study participants

Each comparison in the hierarchy will be formally performed if all preceding comparisons achieve statistical significance. For each time-to-event endpoint (if necessary), appropriate alpha spending methods as specified below in the "Interim Analysis" section based on the observed number of events at the respective interim analyses will be used, to strictly control the overall Type I error at the 2-sided 5% level.

VV-RIM-00312509-1.0 Approved - 18 Aug 2023 GMT-5:00

Safety Analyses

Demographic and baseline characteristics will be summarized by treatment group.

All AEs reported in this study will be coded using the Medical Dictionary for Regulatory Activities (MedDRA®). Summary of TEAEs, deaths and other SAEs, and TEAEs leading to permanent treatment discontinuation will summarized by treatment group.

Other safety, including vital signs (temperature, pulse, blood pressure, pulse oximetry [on dosing days], and respiration rate) and laboratory tests will be summarized by baseline, and change from baseline to each scheduled assessment time point with descriptive statistics. Treatment duration and dose intensity will be summarized.

Interim Analysis

One interim analysis of PFS data is planned for the secondary PFS analysis in all study participants at the time of the primary PFS analysis in participants previously treated with CD38 antibodies. It is expected to occur after 171 PFS events have been observed on study in both arms among all study participants, representing approximately 87% of the events needed for the final analysis of PFS in this population, or at least 100 PFS events have been observed in control arm alone. Type I error will be controlled using the O'Brien-Fleming alpha-spending function based on the observed information fraction (observed number of PFS events at the time of analysis/196).

Two interim analyses of OS will be performed separately in study participants who have previously been exposed to CD38 antibodies and in all study participants each:

- The first interim analysis of OS will be performed at the time of the primary analysis of PFS in participants previously exposed to CD38 antibodies. It is estimated that 67 deaths (representing approximately 44% information fraction) will be observed among prior CD38 antibody exposed participants, and 70 deaths (representing approximately 40% information fraction) will be observed in all participants at the time of this analysis.
- The second interim analysis of OS will be performed at the time of the secondary analysis of PFS in all study participants. It is estimated that 88 deaths (representing approximately 57% information fraction) will be observed in prior CD38 antibody-exposed participants, and 95 deaths (representing approximately 54% information fraction) will be observed in all participants at the time of this analysis.

If OS is formally tested, an alpha-spending function of the Gamma family with $\gamma = -2$, based on the observed number of events at the interim analyses will be used, to strictly control the overall Type I error at the 2-sided 5% level.

VV-RIM-00312509-1.0 Approved - 18 Aug 2023 GMT-5:00

1. INTRODUCTION

1.1. Overview of Multiple Myeloma

Multiple myeloma (MM) is a malignancy associated with the clonal proliferation of plasma cells. Multiple myeloma comprises approximately 13% of hematologic cancers. Multiple myeloma accounts for 1% of neoplastic diseases and is the second most common hematological malignancy in high-income countries. The incidence of MM is 4.5 to 6 per 100,000 per year and the median age of diagnosis is about 70 years. Incidence is higher in Western Europe, North America, and Australia than in Asia and sub-Saharan Africa, possibly because of variation in diagnosis. From 1990 to 2016, there was a 126% increase in global incidence of MM, owing to population growth, an aging world population, and increased age-specific incidence rates (van de Donk, 2021). In 2022, there will be approximately 34,470 new cases of MM and 12,640 deaths due to this disease in the United States (US) (American Cancer Society, 2021). In the European Union (EU), MM, a plasma cell neoplasm, accounts for 1% to 1.8% of all cancers and is the second most common hematological malignancy with an estimated incidence in Europe of 4.5 to 6.0/100,000/year (Dimopoulos, 2021).

Multiple myeloma commonly presents with organ impairment such as renal dysfunction (due to filtered free light chains [FLCs] leading to cast nephropathy or amyloidosis, among other mechanisms), bone infiltration by malignant plasma cells, hypercalcemia, and hematopoietic suppression. Plasma cells in patients with MM typically secrete high levels of monoclonal immunoglobulin (termed “M protein”) or free light chains, which can be detected in the blood, or M protein light chain (termed “Bence-Jones protein”), which can be detected in the urine to diagnose and monitor the disease.

1.2. Unmet Medical Need in Relapsed/Refractory Multiple Myeloma

Multiple myeloma is an incurable malignancy with a 5-year overall survival (OS) of approximately 54%. Although there are effective drugs that, when used in combination, result in a median remission period of up to 60 months for newly diagnosed patients with MM, the cancer eventually progresses following a relapse and remitting course with treatment. With each subsequent therapy, the progression-free survival (PFS) shortens, and by the time patients are refractory to several classes of therapies, the median overall survival (OS) is less than 1 year (Gandhi, 2019) (Hemminki, 2021).

Significant advances have been made in the treatment of MM, including approval of drugs with various mechanisms of action including immunomodulatory agents (IMiDs such as thalidomide [T], lenalidomide [R], and pomalidomide [P]), proteasome inhibitors (PIs, such as bortezomib [V], ixazomib, and carfilzomib [K]), histone deacetylase inhibitor therapy (panobinostat), nuclear export inhibitor therapy (selinexor [S]), antibody therapies directed towards cell surface antigens such as cluster of differentiation 38 (CD38) (daratumumab [D] and isatuximab [Isa]), SLAMF7 (elotuzumab [E]) and B-cell maturation antigen (BCMA) (belantamab mafodotin [an antibody-drug conjugate]), and BCMA-directed genetically modified autologous chimeric antigen receptor (CAR) T-cell therapies (idecabtagene vicleucel and ciltacabtagene autoleucel). Due to the modest monotherapy activity of all agents except CAR-T cell therapies, early line treatment often utilizes combinations including 2 to 4 active drugs including IMiDs, PIs, CD38 antibodies, corticosteroids (such as dexamethasone [d]) and/or alkylating agents.

VV-RIM-00312509-1.0 Approved - 18 Aug 2023 GMT-5:00

Despite advances in the initial management of MM and benefits of combination therapy in first line and for relapsed/refractory disease, and the various drugs available, relapse remains a persistent clinical problem. Due to the number of therapeutic options and combinations available to treating physicians and patients, there is no single algorithm for the therapy of relapsed MM. Complicating the decision-making for physicians with patients with relapsed/refractory MM, numerous studies have shown that combinations with more drugs often have superior benefit-risk profiles compared to fewer drugs. In patients with 1 to 4 prior lines of therapy, several phase 3 studies have shown superior benefit-risk profiles for 3 drug regimens including lenalidomide, a PI, and often a CD38 antibody (eg, DRd, DVd, ERd, etc) compared to 2 drug regimens using either lenalidomide or a PI in combination with corticosteroids (eg, Rd, Vd, etc) (Dimopoulos, 2016a), (Palumbo, 2016). However, as these agents are used in 3 or 4 drug combinations in first line therapy (ie, RVD, D-VRd (Voorhees, 2020) and D-VTd (Moreau, 2021)), combination regimens previously used in later lines of therapy may be less attractive choices as treating physicians seek drugs to which their patients are not refractory. In addition, the benefits of regimens may be less than reported in their original registrational studies when patients have previously received components of the regimen, or previously received therapies unavailable at the time of the original study. Options are somewhat limited for MM patients who have received therapies including lenalidomide and a PI. Pomalidomide-based 3-drug regimens are commonly used in this setting (DPd, IsaPd, EPd, etc). Although the reported overall response rate (ORR) for these regimens in phase 3 studies range from 53% to 69% and PFS from 10.3 to 12.4 months, many patients appropriate for pomalidomide-based therapy have been previously exposed to a CD38 antibody. The efficacy of these regimens in patients previously exposed to CD38 antibodies is not known. Therefore, there is a need for drugs with new mechanisms of action effective for these patients.

1.3. B-cell Maturation Antigen as a Molecular Target for Multiple Myeloma

B-cell maturation antigen (BCMA, also known as tumor necrosis factor receptor superfamily member 17 [TNFRSF17] or cluster of differentiation 269 [CD269]), is a cell surface protein expressed on malignant plasma cells from newly diagnosed, relapsed, and treatment-refractory patients. Notably, BCMA is detected at low levels on normal plasma cells, activated B cells, and plasmacytoid dendritic cells. The restricted pattern of BCMA expression in normal tissues makes it an attractive therapeutic target for MM.

B-cell maturation antigen is an increasingly relevant target in MM. BCMA-targeted antibody-drug conjugates and BCMA-directed chimeric antigen receptor T (CAR T) cell therapies are approved, and BCMA-targeted bispecific antibodies are being studied in clinical trials.

In 2020, belantamab mafodotin, an antibody-drug conjugate targeting BCMA with monomethyl auristatin F (MMAF) payload, received accelerated approval by the US FDA for the treatment of adult patients with relapsed or refractory MM who have received at least 4 prior therapies including a PI, an IMiD, and a CD38 mAb (triple-class exposed), based on the DREAMM-2 study. A conditional marketing authorization in the EU in 2020 required that patients are also refractory to a PI, an IMiD, and a CD38 mAb (triple-class refractory). As of 31 Jan 2020 (Lonial, 2020), the ORR in 97 patients treated with the 2.5 mg/kg dose of belantamab mafodotin was 32% with 19% achieving a ≥very good partial response (VGPR) or better, and 7% of patients achieving a complete response (CR) or better (ie, stringent CR [sCR]) (median prior lines of therapy:7). The median

VV-RIM-00312509-1.0 Approved - 18 Aug 2023 GMT-5:00

duration of response (DOR) estimate was 11 months. However, the median progression-free survival (mPFS) was 2.8 months (95% CI, 1.6 to 3.6 months). While providing a therapeutic option for heavily pre-treated patients, belantamab mafodotin is associated with frequent and severe ocular toxicity, including loss/reduction of vision. Common ocular adverse events (AEs) include keratopathy 72% (grade ≥3: 46%), decreased visual acuity 54% (grade ≥3: 31%), blurred vision 25% (grade ≥3: 4%), and dry eyes 15% (grade ≥3: 1%).

In 2021, the first BCMA CAR T-cell therapy, Abecma® (bb2121 or idecabtagene vicleucel), was approved by the US FDA for patients with relapsed or refractory MM after 4 or more prior lines of therapy, including an IMiD, a PI, and a CD38 antibody (5L+ triple-class exposed). In the EU, Abecma is approved for the treatment of adult patients with relapsed and refractory multiple myeloma who have received at least 3 prior therapies, including an IMiD, PI and a CD38 antibody and have demonstrated disease progression on the last therapy. The approval was based on the single arm KarMMa study that showed ORR/sCR = 72%/28% and mDOR = 11.0 months in 100 MM patients who had received a median of 6 prior lines of therapy. While efficacy outcomes are very compelling for this heavily pre-treated patient population, Abecma is associated with significant toxicity, including cytokine release syndrome (CRS), neurotoxicity, hemophagocytic lymphohistiocytosis/macrophage activation syndrome, and prolonged cytopenia with bleeding and infection. Key grade 3 or higher non-hematologic AEs include: CRS (9%; including 1 grade 5 event), CAR T-cell associated neurotoxicity (4%), encephalopathy (6%), and infections (26%; including 3% grade 5 events). There were also high rates of hematologic toxicity, including 96% grade 3-4 neutropenia (including 41% that had not resolved by month 1 following Abecma infusion) and 63% grade 3-4 thrombocytopenia (including 49% that had not resolved by month 1 following Abecma infusion). Overall, fatal adverse reactions occurred in 6% of patients (Abecma [Package Insert]). Therefore, while Abecma has shown compelling efficacy, its safety profile may preclude many patients from receiving this treatment.

In 2022, a second BCMA CAR-T, Carvykti® (ciltacabtagene autoleucel) was approved by the US FDA for the treatment of adult patients with relapsed or refractory MM after 4 or more prior lines of therapy, including a PI, an IMiD, and a CD38 monoclonal antibody. The approval was based on the exposure of 97 adult patients with relapsed/refractory MM and median 6 prior lines of therapy in the CARTITUDE-1 study (USA cohort) which showed ORR/sCR = 98%/78% and mDOR = 21.8 months. Sixteen additional patients underwent leukapheresis but did not receive Carvykti, lowering the Independent Review Committee (IRC) assessed ORR/sCR rate to 84%/67% (n=113) (Carvykti [Package Insert]). Carvykti was subsequently approved in the EU for patients with relapsed and refractory MM, who have received at least 3 prior therapies, including an IMiD, a PI and aCD38 antibody based on 179 patients (the 97 patients included in the US approval plus 82 other patients; (Carvykti [Summary of Product Characteristics]). As with Abecma, Carvykti is associated with significant toxicity including fatal events that may preclude many patients from receiving this treatment. Key AEs in the 179 patients comprising the population in the EU approval include: CRS (88% any grade; 4% grade ≥3 including 1 grade 5 event); Hemophagocytic Lymphohistiocytosis (HLH)/Macrophage Activation Syndrome (MAS) (3% any grade; 2% grade ≥3 including 1 grade 5 event); and neurologic toxicities including Encephalopathy (22% any grade; 4% grade ≥3), Immune effector cell-associated neurotoxicity syndrome (ICANS;13% any grade; 2% grade ≥3), Motor dysfunction (15% any grade; 4% grade ≥3), Peripheral neuropathy (9% any grade; 2% grade ≥3) and Paresis (6% any grade; 1% grade ≥3). Cases of Parkinsonism were included within the category of Motor dysfunction. The USPI

VV-RIM-00312509-1.0 Approved - 18 Aug 2023 GMT-5:00

noted that none of the 5 cases of Parkinsonism recovered at the time of death or data cutoff. Other notable grade ≥3 AEs included infections (14% grade 3 to 4; 3% grade 5). Grade 3-4 hematologic laboratory abnormalities included neutropenia (97%; including 15% not recovered to ≤grade 2 by day 60) and thrombocytopenia (53%; including 24% not recovered to ≤grade 2 by day 60). As with Abecma, Carvykti's safety profile may preclude many patients from receiving this treatment. Consistent with this hypothesis, patients recruited into the registrational trials with both Abecma and Carvykti tended to be younger (almost all below age 75) and healthier (>40% ECOG 0 and ~90% with prior stem cell transplant) than typical heavily pre-treated myeloma patients.

Bispecific monoclonal antibodies and bispecific T-cell engagers targeting BCMA and CD3 are an emerging class of BCMA directed therapeutics. As of October 2022, several agents are in clinical development (Usmani, 2021) (Sebag, 2021) (Kumar, 2021) and teclistamab (Tecvayli SmPC), a bispecific monoclonal antibody, was recently approved by the European Medicines Agency and the US Food and Drug Administration. BCMA bispecific antibodies are "off the shelf" biologics, that are associated with significantly less toxicity than CAR-T therapy, and therefore have the potential for a more favorable benefit/risk profile with wider applicability than CAR T-cell therapies. In December 2021, study R5458-ONC-1826 reported significant single agent activity of the BCMA x CD3 bispecific antibody linvoseltamab with acceptable tolerability in patients with heavily pretreated relapsed-refractory MM (Zonder, 2021). These data justify exploring the efficacy of linvoseltamab monotherapy in a randomized phase 3 study of patients with relapsed-refractory MM. Linvoseltamab is described below.

1.4. Linvoseltamab (REGN5458)

Linvoseltamab is an anti-BCMA x anti-CD3 bispecific antibody that binds to BCMA on a plasma cell and to CD3 on a T cell. In vitro, linvoseltamab triggers activation of Jurkat T-lymphocytes only in the presence of human BCMA-expressing cells. Linvoseltamab can mediate the killing of numerous MM cell lines and primary MM cells with a range of BCMA cell surface expression. Additional details regarding preclinical data are provided in the linvoseltamab Investigator's Brochure (IB).

1.4.1. Clinical Overview from First-in-Human Study

The R5458-ONC-1826 clinical trial is an ongoing phase 1/2, first-in-human (FIH) study of linvoseltamab monotherapy in heavily pretreated participants with relapsed/refractory multiple myeloma (RRMM) most of whom were refractory to an IMiD, a PI and a CD38 mAb. The phase 1 portion of the study consists of a 2-fold dose escalation using a modified 3+3 (4+3) study design with a starting full dose of 3 mg of linvoseltamab (DL1) up to 800 mg (DL9). In each dose level (DL), patients received lower initial dose(s) to tolerize them to linvoseltamab prior to receiving the full dose. Following DLT evaluation of the 3 to 7 patients enrolled in dose escalation for each DL, 3 to 7 additional patients (up to 10 patients total) in each DL were enrolled as a 'backfill' up to DL5 (3 mg to 48 mg full dose) and 8 additional patients (a total of 12 patients) were enrolled at DL7 (200 mg full dose) to further evaluate the safety profile of linvoseltamab.

In the phase 1 portion of the study, the safety profile of linvoseltamab was generally consistent across DLs and manageable. Also, linvoseltamab has provided therapeutic benefit to some patients (See Section 3.2.2 and linvoseltamab IB). The phase 2 portion of the study is currently enrolling to further evaluate safety and efficacy.

VV-RIM-00312509-1.0 Approved - 18 Aug 2023 GMT-5:00

Additional background information on linvoseltamab, including the most recent safety and efficacy information and the benefit-risk profile can be found in the linvoseltamab IB.

1.5. Pomalidomide-containing Therapy Including Combination Therapy with Elotuzumab, Pomalidomide, and Dexamethasone (EPd)

Pomalidomide has been extensively studied in patients with RRMM as a monotherapy and in combination with dexamethasone (Pd), and in multi-drug regimens including combinations with elotuzumab (EPd), daratumumab (DPd), or isatuximab (IsaPd). The initial approval of pomalidomide was based on a phase 2 randomized trial of pomalidomide monotherapy versus the combination of pomalidomide and low-dose dexamethasone (dexamethasone 40 mg weekly) with a primary endpoint of PFS (Richardson, 2014). In 221 patients with a median of 5 prior therapies, the mPFS was 4.2 for Pd and 2.7 months for pomalidomide monotherapy, (hazard ratio [HR] = 0.68, P=0.003). A subsequent randomized phase 3 study (MM-003) compared pomalidomide plus low dose dexamethasone (dexamethasone 40 mg weekly) to high dose dexamethasone (40 mg/d on days 1-4, 9-12, and 17-20) in 455 patients with RRMM who had failed two prior regimens including bortezomib and lenalidomide (Miguel, 2013). Patients treated with pomalidomide plus low-dose dexamethasone had an improvement in mPFS as compared with patients treated with high dose dexamethasone (4.0 vs 1.9 months, HR = 0.48, p<0.0001). These studies led to the approval of pomalidomide (4 mg daily, days 1-21 of a 28-day cycle) for use in patients who had progressed on at least 2 prior therapies including lenalidomide and bortezomib. The safety and efficacy of pomalidomide in combination with low dose dexamethasone was studied in STRATUS (MM-010), a single arm phase 3b study that reported on 682 relapsed/refractory MM patients treated with the combination regimen (Dimopoulos, 2016b). The mPFS and OS from STRATUS study were 4.6 and 11.9 months, respectively. In clinical practice pomalidomide is often combined with low dose weekly dexamethasone based on the above studies. Alternative pomalidomide dosing regimens have also been explored (Lacy, 2011).

Recent studies have examined the efficacy of combining CD38 monoclonal antibody treatment with Pd in patients with RRMM. In the Equuleus study (MMY1001) daratumumab, a CD38 monoclonal antibody, was evaluated in combination with Pd (DPd) in 103 patients enrolled in a single arm, phase 1b study (Chari, 2017). Patients were required to have prior treatment with lenalidomide and bortezomib. The overall response rate (ORR) was 60%. Adverse events included a daratumumab-specific infusion-related reaction (50%), grade 3 or higher neutropenia (78%), grade 3 or higher anemia (28%), and grade 3 or higher leukopenia (24%). In the MM-014 study, cohort B, a non-randomized phase 2 study, 112 patients with relapsed-refractory myeloma and prior treatment with lenalidomide were treated with DPd. The overall response rate was 77.7% (Siegel, 2020).

Two phase 3 studies demonstrated the superiority of the combination of CD38 monoclonal antibodies with Pd compared to Pd alone in patients previously exposed to lenalidomide and a PI. In the Apollo study, 304 patients were enrolled in a randomized (1:1), phase 3 study testing DPd versus Pd (Dimopoulos, 2020). Patients had received ≥1 prior line of therapy including lenalidomide and a PI. The study demonstrated improved PFS of DPd (mPFS = 12.4 months) compared to Pd (median PFS=6.9 months, HR=0.63, 95%, CI 0.47 to 0.85, P=0.0018), and led to the US approval of subcutaneous daratumumab (DARZALEX FASPRO®) in combination with Pd in patients who have received at least 1 prior line of therapy including lenalidomide and a PI. In

VV-RIM-00312509-1.0 Approved - 18 Aug 2023 GMT-5:00

the EU, DPd is approved for patients who have received 1 prior therapy containing a PI and lenalidomide and were lenalidomide-refractory, or who have received at least 2 prior therapies that included lenalidomide and a proteasome inhibitor and have demonstrated disease progression on or after the last therapy. DPd also achieved better ORR vs Pd with ≥CR rates 24.5% vs 3.9%; ≥VGPR rates were 51.0% vs 19.6% respectively. Grade 3/4 AEs from the study included neutropenia, 68% for DPd vs 51% for Pd. Serious adverse events occurred in 50% of DPd patients vs 39% of Pd patients.

In the ICARIA-MM study 307 patients were enrolled in a randomized (1:1), phase 3 study testing isatuximab in combination with Pd (IsaPd) versus Pd (Attal, 2019). Patients had received at least 2 prior lines of treatment including lenalidomide and a PI. The study demonstrated improved PFS in IsaPd (mPFS = 11.5 months) compared to Pd (mPFS = 6.5 months), HR = 0.596 (95% CI, 0.44 to 0.81, P=0.001), and led to the US approval of isatuximab (SARCLISA®) in combination with Pd in patients who have received at least 2 prior therapies including lenalidomide and a PI and EU approval of isatuximab (SARCLISA) in combination with Pd in patients who have received at least 2 prior therapies including lenalidomide and a PI and have demonstrated disease progression on the last therapy. The most common treatment-emergent adverse event (TEAE) was infusion reaction in IsaPd (38%) versus Pd (0%). Although the combination of CD38 monoclonal antibodies with Pd is superior to Pd alone, the daratumumab combination studies excluded patients previously exposed to CD38 antibodies and the isatuximab phase 3 study excluded patients refractory to CD38 antibodies. These exclusion criteria likely limit the use of these regimens in later lines of therapy.

In contrast, the combination of elotuzumab and Pd is a CD38-free regimen. Elotuzumab is a monoclonal antibody targeting signaling lymphocytic activation molecule F7 (SLAMF7), which was tested in combination with pomalidomide and dexamethasone in patients with RRMM (Dimopoulos, 2018). In this randomized phase 2 study, elotuzumab + Pd (EPd) was compared to Pd in 117 patients refractory to lenalidomide and a PI. Treatment with EPd demonstrated improved mPFS over Pd (10.3 months vs 4.7 months, HR = 0.54; 95% CI, 0.34 to 0.86; P=0.008). The combination of elotuzumab (EMPLICITI®), pomalidomide, and dexamethasone is approved in the United States, Europe, and other countries for use in multiple myeloma patients who have received at least 2 prior therapies, including lenalidomide and a PI. In the EU it is approved for use in multiple myeloma patients who have received at least 2 prior therapies, including lenalidomide and a PI and have demonstrated disease progression on the last therapy.

VV-RIM-00312509-1.0 Approved - 18 Aug 2023 GMT-5:00

2. STUDY OBJECTIVES AND ENDPOINTS

Table 1: Study Objectives and Endpoints

Objective(s)	Endpoint
Primary	
To compare PFS per Independent Review Committee (IRC) between linvoseltamab monotherapy and EPd in randomized participants previously treated with CD38 antibodies	PFS per International Myeloma Working Group (IMWG) response criteria (Kumar, 2016), determined by IRC
Key Secondary	
Unless noted, analyses will be conducted separately in participants who have been previously exposed to CD38 antibodies and in all study participants.	
To compare PFS per IRC between linvoseltamab monotherapy and EPd in all study participants	PFS per IMWG response criteria (Kumar, 2016), determined by IRC
To compare anti-tumor activity per IRC between linvoseltamab monotherapy and EPd as measured by: – objective response – ≥very good partial response (VGPR) – ≥CR	Objective response per IMWG response criteria (Kumar, 2016), (Rajkumar, 2011) as determined by IRC for each of the following categories (Appendix 1) – ≥PR – ≥VGPR – ≥CR
To compare the incidence of minimal residual disease (MRD) negative status (10^{-5}) in the bone marrow between linvoseltamab monotherapy and EPd	MRD negative status at 10^{-5}
To compare the treatment effects on overall survival (OS) between linvoseltamab monotherapy and EPd	OS
To evaluate the treatment effects on pain symptom between linvoseltamab monotherapy and EPd	Mean change from baseline at week 12 in the worst pain score, as measured by BPI-SF Item 3 considering increased analgesic use (as measured by the modified AQA) as a poor outcome (composite strategy)
Other Secondary	
Unless noted, analyses will be conducted separately in participants who have been previously exposed to CD38 antibodies and in all study participants.	
To evaluate the safety and tolerability of linvoseltamab monotherapy compared to EPd	Incidence and severity of treatment-emergent adverse events (TEAEs) including adverse events of special interest (AESI) and serious adverse events (SAEs)
To compare the anti-tumor activity of linvoseltamab monotherapy vs EPd as measured by PFS per investigator	PFS per IMWG response criteria (Kumar, 2016), as determined by investigator

VV-RIM-00312509-1.0 Approved - 18 Aug 2023 GMT-5:00

Objective(s)	Endpoint
To compare the anti-tumor activity of linvoseltamab monotherapy vs EPd as measured per investigator by ○ Objective response ○ ≥VGPR ○ ≥CR	Objective response (≥PR) as per IMWG response criteria (Kumar, 2016), (Rajkumar, 2011) as determined by investigator for each of the following categories: ○ ≥PR ○ ≥VGPR ○ ≥CR
To evaluate duration of response (DOR) per investigator and IRC for participants achieving objective response on linvoseltamab monotherapy and on EPd.	DOR, as per IMWG response criteria (Kumar, 2016), (Rajkumar, 2011) as determined by investigator and IRC.
To evaluate the duration of MRD negative status in the bone marrow in participants receiving linvoseltamab monotherapy and EPd	Duration of MRD negative status in the bone marrow between linvoseltamab monotherapy and EPd
To evaluate the time to response for participants achieving objective response on linvoseltamab monotherapy and EPd	Time from randomization to objective response (≥PR) as per IMWG response criteria (Kumar, 2016) as determined by IRC and investigator
To evaluate the pharmacokinetics (PK) of linvoseltamab in an earlier line of therapy than previously studied	Concentrations of linvoseltamab in serum over time
To evaluate the immunogenicity of linvoseltamab	Incidence and titer of antidrug antibodies (ADAs) and incidence of neutralizing antibodies (NAbs) to linvoseltamab over time
To evaluate the effects on patient reported quality of life (QoL), functioning and symptoms in participants receiving linvoseltamab monotherapy and EPd	Pain response rate, measured by the proportion of pain responders at week 12, as defined by at least a 2-point reduction from baseline in the BPI-SF Item 3 without an increase in analgesic use (using the modified AQA) Mean change from baseline in patient-reported global health status/QoL, functioning per EORTC QLQ-C30, and disease symptoms per EORTC QLQ-MY20, (PGIS and PGIC will be used as global anchors) Mean change from baseline in patient-reported general health status per EQ-5D-5L
Exploratory	
Unless noted, analyses will be conducted separately in participants who have been previously exposed to CD38 antibodies and in all study participants.	
To evaluate the PFS2 (time from randomization to second objective disease progression, or death from any cause, whichever is first) in participants receiving linvoseltamab monotherapy and EPd	Total time from randomization to second objective disease progression, or death from any cause, whichever is first per investigator
To evaluate the incidence of imaging plus MRD negative status in participants receiving linvoseltamab monotherapy and EPd	Imaging-plus MRD negative (10^{-5}) status by IMWG response criteria (Kumar, 2016) (Appendix 1)
To explore the relationship between soluble B-cell maturation antigen (sBCMA) at baseline and response	Baseline sBCMA concentration and IMWG response over time

VV-RIM-00312509-1.0 Approved - 18 Aug 2023 GMT-5:00

Objective(s)	Endpoint
To evaluate sBCMA concentrations at baseline and over time	• Concentrations of total sBCMA in serum at baseline and over time
To characterize the effects of each treatment on immune cell number over time in peripheral blood and bone marrow	• Immune cell subsets (T, B, Monocyte, NK) in peripheral blood over time • Immune cell subsets (T, B, Monocyte, NK) in bone marrow at CR or progressive disease (PD) compared to screening
To evaluate the relationship between T cell activation and NK activation over time in peripheral blood and bone marrow and response	• % activated T and NK cells in peripheral blood by flow cytometry over time • % activated T and NK cells in bone marrow at baseline and at CR or PD
To characterize the effects of each treatment on polyclonal immunoglobulins over time	• IgG, IgA, in non-IgG/IgA secreting patients over time • IgE and IgM over time
To perform pharmacogenomics analysis of deoxyribonucleic acid (DNA) and ribonucleic acid (RNA) and the relationship to efficacy and safety associated with each treatment	Single nucleotide polymorphisms or polygenic risk scores as well as gene expression signature in blood and bone marrow associated with IMWG response or cytokine release syndrome (CRS)
To evaluate B-cell maturation antigen (BCMA) and SLAMF7 levels, in bone marrow biopsy at baseline and the relationship to patient response or CRS	• Baseline BCMA and SLAMF7 protein levels detected by immunohistochemistry and the relationship to IMWG response or CRS
To evaluate the effect of linvoseltamab vs EPd on response in patients with variable bone marrow plasma cell burden	Correlation between baseline plasma cell burden and IMWG response
To evaluate the effect of linvoseltamab vs EPd on response in patients with and without EMP	Correlation between EMP status and IMWG response
To explore cytogenetic abnormalities and response.	IGH translocations such as t(4:14), t(14:16), deletion 17p, 1q amplification, trisomies and IMWG response.
To evaluate the treatment effects by arm (linvoseltamab vs EPd) on patient-reported symptomatic toxicities	Overall incidence of symptoms over the treatment period per PRO-CTCAE (5 symptomatic toxicities including fatigue, dyspnea, nausea, sensory neuropathy, diarrhea) and FACIT GP5 by arm (linvoseltamab, EPd)
To evaluate hospitalization burden of patients by treatment arm (linvoseltamab vs EPd)	Number and duration of all treatment-related hospitalizations (including general ward, ICU, ER visits) by arm during the treatment-emergent period (Section 11.4.5.1). Treatment-related hospitalizations include planned hospitalization for treatment administration & monitoring and unplanned hospitalization due to AE. AE-related hospitalization rate (per 100 patient-years) by arm, defined as the number of patients with occurrence of ≥1 AE-related hospitalization normalized by the total treatment-emergent period (in years).

VV-RIM-00312509-1.0 Approved - 18 Aug 2023 GMT-5:00

3. HYPOTHESIS AND RATIONALE

3.1. Hypothesis

Linvoseltamab monotherapy improves PFS as compared with elotuzumab, pomalidomide, and dexamethasone (EPd) in participants with RRMM who have received 2 to 4 prior lines of therapy including lenalidomide, a proteasome inhibitor (PI) and a CD38 antibody.

Linvoseltamab monotherapy improves PFS as compared with EPd in all study participants with RRMM who have received 1 to 4 prior lines of therapy including lenalidomide and a PI (with or without prior CD38 antibody therapy).

3.2. Rationale

3.2.1. Rationale for Study Design

This study is designed to evaluate the safety and efficacy of linvoseltamab monotherapy compared to EPd in participants with RRMM who have received 1 to 4 prior lines of therapy including a PI and lenalidomide (with or without prior CD38 antibody therapy). Participants in the EU and the United Kingdom (UK) must have previously received 2 to 4 prior lines of therapy, including a CD38 antibody. The primary endpoint is PFS.

3.2.1.1. Rationale for Patient Population

As discussed in Section 1.2, therapies for myeloma are not curative, combination therapy in early lines is standard, and patients who have received 1 to 4 prior lines of therapy including a PI and lenalidomide have a significant unmet medical need. There is no single algorithm for the therapy of relapsed MM and the choice of subsequent therapy is driven by several factors which contribute to the perceived potential benefit-risk profile for a patient including: registrational trial data, factors related to prior treatment (prior drug exposure, responsiveness and refractoriness to previous therapies, etc), patient-specific factors (patient age, co-morbidities, need for convenient treatment), national issues (drug access/availability in the jurisdiction, etc), and other factors. Due to the common use of 3 and 4 drug regimens early in myeloma, many patients who have previously received lenalidomide and a PI have also received a CD38 antibody in current clinical practice. However, the trials supporting use in the patient population who have previously received lenalidomide and a PI were generally conducted before the widespread use of CD38 antibodies. Consequently, there is a need to understand the benefit of approved regimens in the current treatment landscape. New therapies that can be broadly available to a wide variety of patients are also needed.

3.2.1.2. Rationale for Elotuzumab, Pomalidomide, and Dexamethasone as the Control Arm Regimen

Pomalidomide-containing triplet regimens are appropriate options for patients who have received 1 to 4 prior lines of therapy including a PI and lenalidomide. Several regimens are approved by health authorities and recommended by international organizations (NCCN and EHA-ESMO) for these patients. EPd is an active regimen with an ORR of 53.3% in the Eloquent-3 study compared to 26.3% for Pd alone. EPd in Eloquent-3 provided benefit relative to Pd alone (as measured by the HR of the PFS; HR = 0.54) similar to CD38 antibodies + Pd in the Apollo (HR = 0.63) and

VV-RIM-00312509-1.0 Approved - 18 Aug 2023 GMT-5:00

Icaria-MM (HR = 0.596) studies which also used Pd as the control arm. EPd is generally well tolerated, with incremental toxicity compared to Pd alone. Infusion-related reactions (IRR) occurred in 3% of patients treated with EPd (all < grade 3). Grade 3/4 lymphopenia occurred in 70% of patients treated with EPd compared to 35% with Pd alone. Vital sign abnormalities including systolic blood pressure ≥160 mm Hg (18% vs 13%), diastolic blood pressure ≥100 mm Hg (8% vs 4%) and bradycardia (heart rate <60 beats per minute [43% vs 22%]) were more common with EPd relative to Pd. Serious adverse reactions were reported in 22% of patients treated with EPd compared to 15% with Pd. The most frequent serious adverse reactions with EPd compared to Pd were pneumonia (13% vs 11%) and respiratory tract infection (7% vs 3.6%). The proportion of patients who discontinued any component of the EPd treatment regimen due to adverse reactions were 5.0% compared to 1.8% treated with Pd alone (Dimopoulos, 2018). Based on these data, EPd is recommended by NCCN (NCCN, 2023) for patients with 2 prior therapies including lenalidomide and a PI, and by EHA-ESMO at second or subsequent relapse for patients after lenalidomide and a PI (Dimopoulos, 2021). Compared to triplet regimens of CD38 antibodies + Pd, EPd is also an option for patients who are refractory to CD38 antibodies and/or for whom a CD38 antibody containing triplet would otherwise not be appropriate.

Data are limited for treatment with pomalidomide-based triplets containing elotuzumab or CD38 antibodies in patients previously exposed to CD38 antibody-containing therapies. Although use of elotuzumab provides a drug with a unique mechanism of action compared to re-treatment with a CD38 antibody, the Eloquent-3 study included very few patients with prior daratumumab, and the benefit of EPd in CD38 antibody-exposed patients is uncertain. All available data for treatment after prior CD38 antibody-based therapy with therapy containing either elotuzumab or CD38 antibodies are from small studies. Studies using a CD38 antibody after a prior CD38 antibody show only modest benefit for patients with generally short responses. Cross-trial comparisons between small, single arm studies or between single arm studies and randomized studies are of limited value but it appears that efficacy of a CD38 antibody alone or in combination after a previous CD38 antibody is markedly less than in CD38 antibody-naïve patients. Available data suggest the efficacy of elotuzumab-containing therapies after prior CD38 antibody appears comparable to the benefit of CD38 antibody-containing therapies in similar patients. Available data can be summarized as follows:

- Monotherapy CD38 antibody has little efficacy in patients previously treated with CD38 antibody. In a study of isatuximab monotherapy in daratumumab-refractory patients, there were no responses (ORR = 0%) and the median PFS was 1.6 months (Mikhael, 2021).
- CD38 antibody therapy after prior CD38 antibody therapy results in responses (ORR = ~40 to 55%) with a short duration of benefit (mPFS = ~3 to 8 months) (Hulin, 2022) (Nooka, 2019) (Decaux, 2022) (Mohan, 2022) (Becnel, 2020).
- Separate small data sets from a single institution show similar efficacy with elotuzumab or isatuximab after daratumumab with ORR = 55 to 61% but <3-month duration of treatment or time to next treatment (Becnel, 2020) (Becnel, 2018).
- Other studies of elotuzumab-based therapy in anti-CD38-exposed patients also show responses (ORR = ~35%) with a short duration of benefit (mPFS = 1.9 to 3.7 months) (Ailawadhi, 2022b) (Hoylman, 2020).

VV-RIM-00312509-1.0 Approved - 18 Aug 2023 GMT-5:00

3.2.1.3. Rationale for Linvoseltamab Monotherapy as the Experimental Arm

Based on data from study R5458-ONC-1826 in 73 more heavily treated phase 1 patients, linvoseltamab is an appropriate option for evaluation in patients who have received 1 to 4 prior lines of therapy including a PI and lenalidomide and may provide a superior benefit/risk profile compared to EPd. These patients had a median of 5 prior lines of therapy and 89% were at least triple refractory (refractory to an IMiD, PI, and CD38 antibody). As of 30 Sep 2021, across all dose levels (DL1 to DL9) in phase 1, the ORR for linvoseltamab was 51%, and was 75% for dose levels with a full dose of 200 mg and above. Responses were deep. Among all 37 responders, 86% achieved ≥VGPR and 43% achieved ≥CR. Amongst the 24 patients who received a full dose of 200 mg and above, 58% achieved ≥VGPR. For comparison, in Eloquent-3, 20% achieved ≥VGPR. Therefore, linvoseltamab has the potential to lead to a paradigm shift in the treatment of multiple myeloma by being a monotherapy that is superior to a standard 3-drug combination regimen.

3.2.1.4. Rationale for Objectives and Endpoints

The primary endpoint of the study is **PFS** as per the International Myeloma Working Group (IMWG) criteria. The primary study objective is to compare the PFS between the investigational arm and control arm (ie, linvoseltamab vs EPd) in participants who have been previously exposed to CD38 antibodies. Progression-free survival has been used as an endpoint for most randomized studies in multiple myeloma and is acceptable to health authorities globally as a measure of clinical benefit in RRMM.

Key secondary endpoints include measures of:

- **PFS** is also assessed as an endpoint in all study participants.
- **Overall response** per IMWG criteria.
- **Depth of response** (≥VGPR, ≥CR, and MRD negative status per IMWG criteria) which for more than a decade has been known to correlate with improved clinical outcomes (response duration and OS) for patients who receive autologous transplants and other therapies (Harousseau, 2010) (Harousseau, 2009). More recently, MRD negative status has been shown to be an even better predictor of patient benefit than CR (Lahuerta, 2017) and is recommended as a key endpoint in myeloma studies.
- **Overall survival** which is the gold standard for patient benefit in multiple myeloma trials.
- **Change in pain** from baseline as measured by a patient reported scale. Pain is highly prevalent among MM patients with approximately 73% of patients suffering from chronic pain (Ramsenthaler, 2016). Bone lesions are one of the components of CRAB criteria (hypercalcemia, renal failure, anemia, and bone lesions) (Rajkumar, 2014) for the diagnosis of myeloma, and pain (usually bone pain) is a major contributor to patient physical functioning and is one of the most impactful symptoms that negatively affect quality of life (Boland, 2013). As a complement to improving ***quantity*** of life, improving ***quality*** of life is a major goal of any myeloma therapy.

Other secondary objectives include the primary safety endpoint of the study, which is the incidence and severity of TEAEs, adverse events of special interest (AESI), and serious adverse events

VV-RIM-00312509-1.0 Approved - 18 Aug 2023 GMT-5:00

(SAEs) during the study treatment period. In conjunction with the efficacy endpoints, the safety and quality of life endpoints will enable an overall assessment of benefit-risk.

3.2.1.5. Rationale for Stratification Factors

Enrollment will be stratified by 2 factors: 1) prior CD38 antibody exposure and 2) a composite of International Staging System (ISS) stage and the presence or absence of extramedullary plasmacytomas (EMPs) as described in Section 6.1.

Prior CD38 antibody exposure: All study participants will have been previously treated with lenalidomide and a PI, but not all may have been previously treated with a CD38 antibody. Although, in study R5458-ONC-1826, all patients treated with linvoseltamab were previously exposed to a CD38 antibody and efficacy was high, prior CD38 antibody therapy or time since most recent CD38 antibody may affect the efficacy of EPd. Elotuzumab mediates the killing of myeloma cells by NK cell mediated antibody-dependent cellular cytotoxicity (ADCC) and antibody-dependent cellular phagocytosis (ADCP) ((Empliciti (elotuzumab) [Package Insert]), Section 12.1). Casneuf and colleagues (Casneuf, 2017) reported that daratumumab rapidly lowers NK cells in patients and recovery of NK cells occurs over months. There was some recovery of total NK cell count 3 months after cessation of daratumumab and more after 6 months. However, even 6 months after cessation of daratumumab, NK cell counts had not returned to pre-treatment levels. Similar effects were noted in vitro with other CD38 antibodies (Casneuf, 2017). Courville and colleagues (Courville, 2020) reported CD38 median fluorescence intensity values on NK and plasma cells were completely suppressed for 4 months after cessation of daratumumab and started to increase 4 to 6 months after last exposure. However, CD38 was still difficult to detect in 5 of 45 (11%) patient samples taken more than 6 months after cessation of daratumumab, suggesting long-term effects of daratumumab. Therefore, CD38 antibodies effects on NK cells are likely to be most pronounced right after cessation of therapy but may be very prolonged. Consistent with these translational findings, small, uncontrolled retrospective clinical studies and a recent prospective phase 2 study have suggested that the efficacy of elotuzumab-based regimens are negatively affected by previous exposure to daratumumab (Becnel, 2018) (Hoylman, 2020) (Ailawadhi, 2022a). None of the studies required that the antibodies were given sequentially with no intervening therapy. In the study by Hoylman and colleagues, approximately 25% of patients had at least 1 intervening therapy between daratumumab and elotuzumab. Therefore, the presence or absence of prior treatment with a CD38 antibody, and the time since prior CD38 antibody may affect the efficacy of EPd. The effect may be most pronounced the shorter the interval between therapies; however, effects may be present for a long time after cessation of CD38 antibody therapy as suggested by the study by Ailawadhi and colleagues which found that patients who had received daratumumab in the immediate prior line had better efficacy than those with at least one intervening therapy. Therefore, the Sponsor has chosen to use 3 strata: CD38 antibody ≤4 months from randomization vs CD38 antibody >4 months from randomization vs no prior CD38 antibody.

Composite of ISS stage and the presence or absence of EMPs: The ISS was designed as a simple, reliable staging system for multiple myeloma that can be applied internationally for patient classification and stratification (Greipp, 2005). ISS stage is commonly used in registrational trials in myeloma. Stage III consistently has the worst outcomes in studies of Pd-containing triplet therapies and is sometimes compared to stages I and II together. However, <20% of patients may be ISS stage III. The presence of EMPs is a poor prognostic sign (Bansal, 2021) which may overlap somewhat with ISS stage III. In the phase 1 portion of study R5458-ONC-1826, responses were

VV-RIM-00312509-1.0 Approved - 18 Aug 2023 GMT-5:00

seen in 4/13 (30.8%) of study participants with EMPs compared to 34/60 (56.7%) of study participants without EMPs. Since this study (R5458-ONC-2245) is being conducted in patients with 1 to 4 prior lines of therapy, it is expected that 10% to 20% of patients will have EMPs. The composite term will combine these 2 poor prognostic tumor factors into a single stratification factor so that approximately 30% to 40% of patients are identified in the higher risk group.

3.2.1.6. Rationale for Treatment to Progression

Multiple myeloma is an incurable disease in most patients, and those who have received 1 to 4 prior lines of therapy including lenalidomide and a PI, have a PFS of approximately a year or less with the most optimal regimens (see Section 1.5). In this study patients will be treated with linvoseltamab or EPd until disease progression, or other protocol-defined criteria have been met (see Section 6.1). Continuous treatment may be required to prevent the development of drug resistance and eradicate disease. In light of the safety and efficacy demonstrated in the linvoseltamab FIH study, continuous treatment until disease progression is justified.

3.2.1.7. Rationale for Bone Marrow Aspirate and Biopsy

According to IMWG guidelines (Kumar, 2016), the assessment of disease burden and treatment response in the bone marrow by enumeration of malignant plasma cells is necessary to confirm changes observed through quantitation of circulating immunoglobulin or immunoglobulin-FLCs in patients with secretory MM. Enumeration of malignant and normal plasma cells will be conducted by standard histopathology. Bone marrow aspirate will be collected to evaluate MRD status. If core biopsy is not available, BMA may be used to assess sCR (Rajkumar, 2011).

In addition, collection of bone marrow enables exploratory analysis of myeloma and other immune cell subsets, DNA, RNA, and protein levels that may assist in evaluating disease activity and treatment response. Therefore, the baseline enumeration of normal plasma cells and myeloma cells in bone marrow core biopsy and aspirate as well as longitudinal analysis of myeloma and plasma cell number will be analyzed. For patients who have had a bone marrow biopsy prior to screening within 42 days to W1D1, archival tissue is requested. Bone marrow aspirate will still be required to support assessment of MRD by determining the clone ID at screening. If archival tissue is not available, then a bone marrow biopsy is required during screening.

3.2.1.8. Rationale for Timing and Duration of Hospitalization for Linvoseltamab Treatment

In study R5458-ONC-1826 as of 01 Sep 2022, 93 of 203 study participants (45.8%) treated in DL7-9 or the expansion phase experienced CRS. The median time to onset of CRS was 11.7 hours from the start of the infusion, and median duration of each CRS was 15.4 hours. Using 5 mg/25 mg step up regimen, there were no cases of grade ≥2 CRS that began more than approximately 24 hours after the infusion. The vast majority of grade ≥2 CRS began following step-up doses; only 2 of 180 participants (1.1%) experienced grade 2 CRS with the first full dose, and no participant experienced CRS greater than grade 2 with the first full dose.

After the 5 mg dose week 1, 131 participants did not experience any grade CRS. Of these patients, 126 received a dose week 2 and 14 of 126 (11.1%) developed CRS week 2 including 11 grade 1 events (3 treated with tocilizumab and 8 not treated with tocilizumab) and 3 grade 2 events (1 treated with tocilizumab and 2 not treated with tocilizumab). Out of the 6 of 126 participants

VV-RIM-00312509-1.0 Approved - 18 Aug 2023 GMT-5:00

(4.8%) who received any intervention for CRS (3 cases of grade 1 CRS treated with tocilizumab and 3 grade 2 cases), CRS in 3 of 126 (2.4%) began more than 8 hours of the start of infusion. Based on this analysis, patients randomized to linvoseltamab are to receive linvoseltamab infusion in a monitored setting* with subsequent hospitalization and observation for the first 24 hours after the end of study drug administration following the initial dose (week 1) and intermediate dose (week 2). Please refer to Section 8.1.1 for further details.

Hospitalization from week 3 onwards (or once step-up dosing has been tolerated) is to be implemented at the discretion of the investigator.

* For the purposes of this trial, a monitored setting is defined as a setting where patients are closely observed under the supervision of a health care provider (eg, doctor, nurse practitioner, or physician's assistant), such as an infusion center or inpatient unit in a hospital where access to life saving measures is readily available.

3.2.2. Rationale for Dose Selection

The dosing regimen for linvoseltamab (5-25-200 mg) is based on the integration of all available safety, efficacy, total drug and total sBCMA exposure data from the ongoing FIH study R5458-ONC-1826 (Study 1826), in which linvoseltamab is being tested as monotherapy in patients with RRMM. The cutoff date for safety and efficacy data from the FIH study used to support this section is 30 Sep 2021.

Linvoseltamab has been tolerated up to a full dose of 800 mg. Thus far, the incidence rate of TEAEs, SAEs, and grade ≥3 TEAEs has been similar across all dose levels evaluated in the study and there is no apparent sign of dose-dependency. The most common nonhematologic TEAE associated with linvoseltamab is CRS (46.8%), the majority of which were grade 1 or grade 2 and most occurred during the first 1 to 2 weeks of treatment following the initial or intermediate dose. With the proposed step-up dosing of an initial 5 mg and the intermediate 25 mg dose levels followed by the full dose, all administered at weekly intervals, no correlation between the severity of CRS and the full dose levels tested has been observed (up to 800 mg). The initial and intermediate doses in the FIH study attenuated the risk or severity of CRS following linvoseltamab infusion, therefore supporting the continued use of 5 mg and 25 mg of linvoseltamab as the initial dose on day 1 and the intermediate dose on day 8, respectively. The 200 mg full dose of linvoseltamab is 4-fold lower than the highest full dose (800 mg) evaluated in the phase 1 portion of Study 1826, which was found to be tolerable. Detailed information about the reported timing, incidence, and severity of CRS and other safety events are provided in the linvoseltamab IB.

Efficacy endpoint data indicate a trend towards higher response rates at higher doses, with ORRs of 29% (7/24 participants), 48% (12/25 participants) and 75% (18/24 participants) at the dose levels of 3 mg to 12 mg, 24 mg to 96 mg, and 200 mg to 800 mg, respectively. When assessing ORR for the higher dose levels individually, the ORR across the dose range of 200 mg to 800 mg also remain stable with estimates of 83.3% (10/12 participants), 62.5% (5/8 participants) and 75% (3/4 participants) at 200 mg, 400 mg, and 800 mg, respectively. Detailed information about the reported depth, duration and durability of response are provided in the linvoseltamab IB.

The totality of data from Study 1826 indicates that a full dose of 200 mg linvoseltamab is likely to provide patients with favorable clinical benefit while maintaining a 4-fold margin in dose level

VV-RIM-00312509-1.0 Approved - 18 Aug 2023 GMT-5:00

below the highest dose (a full weekly dose of 800 mg) tested thus far. The dose of 200 mg linvoseltamab is therefore proposed for further study in the monotherapy setting.

3.2.3. Rationale for Decreasing Dosing Frequency for Patients Treated with Linvoseltamab for 24 Weeks

Patients treated with linvoseltamab who complete at least 24 weeks of treatment and achieve a response of VGPR or better will have their dosing frequency decreased from Q2W to Q4W. A decrease in dosing interval will improve patient convenience and may minimize the risk of AEs resulting in a more favorable benefit:risk profile.

The rationale for decreasing dose intensity is based on several observations in study R5458-ONC-1826 where the dosing frequency at all dose levels (full doses 3 to 800 mg) was decreased from QW to Q2W after 14 weeks (phase 2) or 16 weeks (phase 1) of therapy.

- Patients treated at all dose levels continued to have prolonged duration of responses after transitioning from QW to Q2W dosing, suggesting that long responses can occur with a variety of dose intensities (Zonder, 2021).
- Patients who had treatment delays due to AEs >28 days had sustained responses. Thirty-nine (97.5%) of 40 patients with prolonged treatment delays maintained (n=35; 87.5%) or deepened (n=4; 10%) their level of response at the end of the delay including all 31 patients with VGPR or better. One patient (2.5%) progressed who had a 91-day treatment delay after study week 10.
- Based on the results of a population PK analysis, the median C_{trough} levels in patients treated with 200 mg Q4W are predicted to remain above those in patients at lower dose levels (≤96 mg) given Q2W.

Therefore, these data support that the proposed decrease in dose intensity will maintain clinical benefit for patients who have achieved a response of VGPR or better.

3.3. Risk-Benefit

The primary objective of this study is to demonstrate the superiority for linvoseltamab monotherapy compared to EPd in adult participants with RRMM who have received at least 1 to 4 prior lines of therapy including lenalidomide and a PI. EPd is an approved therapy in adult patients with RRMM who have received at least 2 prior therapies including lenalidomide and a PI. EPd is expected to provide a mPFS of less than 1 year. New therapies with improved benefit (longer PFS) and acceptable tolerability are needed.

3.3.1. Risk-Benefit Assessment for Linvoseltamab Monotherapy

BCMA bispecific antibodies and other “off-the-shelf” T-cell engaging therapies are an appealing class of therapy for this patient population since they have: 1) a unique mechanism of action compared to the current major classes of therapies (IMiDs, Pis, CD38 antibodies, alkylating agents, and corticosteroids), 2) a more tolerable safety profile compared to BCMA-targeting CAR T-cell therapies which should allow for broader applicability, and 3) higher single agent efficacy (in heavily pre-treated patients) than any class of agent except for CAR T-cell therapies. Evaluating linvoseltamab as a monotherapy in earlier line patients is reasonable since their T cells may be more functional and able to provide better anti-tumor activity than T cells in late line patients.

VV-RIM-00312509-1.0 Approved - 18 Aug 2023 GMT-5:00

Enhanced toxicity such as worsened CRS due to more intact immune system will be mitigated with appropriate risk minimization measures.

3.3.1.1. Linvoseltamab Risk Assessment

Linvoseltamab has a manageable safety profile in heavily pretreated patients with RRMM. Important risks of clinical significance, rationale for risks, and associated mitigation strategies are presented in Table 2. Important risks include identified and potential risks (see the most recent version of the IB for additional details).

Table 2: Risks Assessment of Linvoseltamab

Important Risks of Clinical Significance	Rationale for Risk	Mitigation Strategy
CRS / IRR / systemic hypersensitivity reactions	There is significant overlap in the clinical presentation of CRS, IRR, and systemic hypersensitivity. The symptomatology associated with these entities is consistent with an underlying mechanism of exaggerated immune response and release of inflammatory cytokines. The mechanism of action of T-cell engaging immunotherapy such as linvoseltamab is non-physiologic T-cell activation with the occurrence of cytokine release. Clinical effects of these can range from mild symptoms such as fever to a severe inflammatory syndrome which may be life-threatening or lead to death.	Patients at high risk of hypersensitivity reactions are excluded (Section 7.2.2 Exclusion Criteria #19 and #20). Medications and equipment to manage medical emergencies, must be available for immediate use (Section 8.3.2). During cycle 1, dexamethasone acetaminophen and antihistamine will be administered as premedication (Section 8.1.1.2). Infusion of linvoseltamab in a monitored setting and subsequent inpatient monitoring following administration of the initial and intermediate step-up doses for early detection and management of CRS/IRR and hypersensitivity (Section 8.3). Guidance to investigators on drug interruption and/or termination, grading, and management of symptoms of CRS/IRR and hypersensitivity reactions (Section 8.3.1 and Section 8.3.2).
Potential ICANS	CNS symptoms such as confusion, delirium, and aphasia have been observed with CAR T therapy and other bispecific antibodies and were previously considered part of CRS. These symptoms are now considered to be a separate syndrome called ICANS (Lee, 2019) (Section 8.3.3).	Patients with CNS pathology are excluded Section 7.2.2 Exclusion Criteria #3). Guidance for early identification of potential ICANS events and monitoring (Section 9.2.3.4). Guidance on management of neurological toxicity including study drug administration (Section 8.3.3).
Serious Infections	Based on the mechanism of action,	Patients with known active infections are

VV-RIM-00312509-1.0 Approved - 18 Aug 2023 GMT-5:00

Important Risks of Clinical Significance	Rationale for Risk	Mitigation Strategy
	treatment with linvoseltamab may result in pronounced B-cell depletion and hypogammaglobulinemia. The expected primary pharmacology of B-cell depletion can result in increased risk of infections, including opportunistic infections and viral infections (including HBV).	excluded (Section 7.2.2 Exclusion Criteria #17and #18). Immunoglobulin levels will be checked at baseline and levels will be monitored periodically throughout the trial (see Section 9.1). Total lymphocyte counts and T lymphocyte subsets will be checked at baseline and monitored periodically throughout the trial (see Section 9.2.3.7). Recommend prophylaxis for viral infections (herpes viruses), PJP, CMV, and fungal infection and intravenous immunoglobulin for patients with severe hypogammaglobulinemia (Section 8.3.4).
Tumor Lysis Syndrome (TLS)	Tumor lysis syndrome is an oncologic emergency triggered by the rapid release of intracellular material from lysing malignant cells. Tumor lysis syndrome has been reported in virtually every cancer type. The highest risk of TLS is seen in large-volume, highly metabolic malignancies such as B-cell acute lymphoblastic leukemia and Burkitt's lymphoma, whereas solid tumors and slow-growing hematologic malignancies (such as MM) carry lower risks (Wilson, 2014).	Patients with hypersensitivity to both allopurinol and rasburicase are excluded (Section 7.2.2 Exclusion Criteria #20). Guidance on prophylaxis, monitoring, and management of TLS (Section 8.3.5).
Embryo-Fetal Toxicity	Reproductive and developmental toxicology studies have not been conducted; therefore, the effects of linvoseltamab on reproduction and embryo-fetal development are unknown.	Pregnant or breastfeeding women are excluded (Section 7.2.2 Exclusion Criteria #26 and #27). Requirement on contraception use is captured in Section 7.2.2 Exclusion Criteria #27. Pregnancy testing in women of childbearing potential (Section 9.1).

VV-RIM-00312509-1.0 Approved - 18 Aug 2023 GMT-5:00

Important Risks of Clinical Significance	Rationale for Risk	Mitigation Strategy
Clinical consequences of immunogenicity: ADAs	All protein therapeutics, including linvoseltamab, have the potential to induce an immunogenic response (formation of antibodies against the study drug) following administration.	Anti-linvoseltamab antibody status will be assessed during the study (Table 13 and Table 14). Exploratory evaluation of clinical consequences of immunogenicity will be completed (Table 1).

ADA=Antidrug antibody; AE=Adverse event; CAR T=Chimeric antigen receptor T cell; CMV=Cytomegalovirus; CNS=Central nervous system; CRS=Cytokine release syndrome; HBV=Hepatitis B virus; ICANS=Immune effector cell-associated neurotoxicity syndrome; IRR=Infusion-related reaction; mAb=Monoclonal antibody; MM=Multiple myeloma; TLS=Tumor lysis syndrome; PJP=Pneumocystis jirovecii pneumonia.

More information about the known and expected benefits and risks of linvoseltamab may be found in the most recent version of the linvoseltamab IB.

3.3.1.2. Linvoseltamab Benefit Assessment

Based on preliminary clinical efficacy data from Study R5458-ONC-1826 demonstrating antitumor activity, linvoseltamab has provided therapeutic benefit to some patients with MM who were refractory to multiple lines of previous therapy. Responses, including ≥VGPR, were observed in all dose levels studied (DL1 to DL9) in the FIH study, with an apparent plateau in efficacy to support the evaluation of the 200 mg dose level (Section 1.4.1 and Section 3.2.2). Additional information may also be found in the most recent version of the IB.

Additional data are needed to better understand the clinical benefit of linvoseltamab when given to patients in earlier stages of MM.

3.3.2. Risk-Benefit Assessment for the Combination of Elotuzumab, Pomalidomide, and Dexamethasone

EPd serves as the active comparator for this study. The dosing regimen for EPd in this study is approved in the US and EU for the treatment of adult patients with RRMM who have received at least 2 prior therapies including lenalidomide and a PI (Empliciti (elotuzumab) [Package Insert]) and (Empliciti [Summary of Product Characteristics])). See Section 1.5 and Section 3.2.1.2 for information on the rationale for use of EPd as the comparator.

3.3.2.1. COVID-19 Consideration

Recognizing that the COVID-19 pandemic will have an impact on the conduct of clinical trials, the sponsor does not intend to screen any participants in this study until the impact of the COVID-19 pandemic is deemed manageable and no longer interfering with the conduct of trials at individual sites, and participants can safely participate in this study. Until then, the sponsor plans to obtain approvals from Health Authorities/Ethics Committees to enable initiation of study sites for this study, as allowed by local laws and regulations.

For more information regarding clinical study conduct and oversight during the COVID-19 public health emergency, see Section 9.1. For more information regarding the permitted timing of COVID-19 vaccinations, see Section 7.2.2 Exclusion Criterion #12 and Section 8.7.1.

VV-RIM-00312509-1.0 Approved - 18 Aug 2023 GMT-5:00

3.3.3. Overall Risk-Benefit Conclusion

The available nonclinical and preliminary clinical data from the ongoing FIH study (R5458-ONC-1826), indicate that linvoseltamab has a manageable safety profile and is anticipated to provide anti-tumor benefit as good or better than EPd to patients with MM who have received 1 to 4 prior lines of therapy including lenalidomide and a PI.

Considering the multiple safety measures taken to minimize important risks of linvoseltamab, and the anticipated benefits that may be afforded in patients with RRMM participating in this study, clinical development of linvoseltamab in this patient population is justified.

VV-RIM-00312509-1.0 Approved - 18 Aug 2023 GMT-5:00

4. ENDPOINTS

See Table 1 for endpoints.

VV-RIM-00312509-1.0 Approved - 18 Aug 2023 GMT-5:00

5. STUDY VARIABLES

5.1. Demographic and Baseline Characteristics

Baseline characteristics will include standard demographic information (eg, age, race, etc), physical examination (PE) findings (including height and weight), and medical history and oncologic history (including prior cancer related therapies, radiotherapies, surgeries, and transplant related to MM) for each participant.

5.2. Efficacy Variables

Efficacy variables include, but are not limited to, the following:

- Best overall response (sCR, CR, VGPR, PR, stable disease [SD], or PD) as measured by IMWG criteria
- DOR by IMWG criteria among participants achieving objective response (best overall response of sCR, CR, VGPR or PR)
- PFS as measured by IMWG criteria
- MRD negative status (at 10^{-5})
- OS

5.3. Safety Variables

Safety variables include, but are not limited to, the following:

- Vital signs, as described in Section 9.2.3.2
- PE, as described in Section 9.2.3.3
- Neurological examination results, as described in Section 9.2.3.4
- Electrocardiogram (ECG) results, as described in Section 9.2.3.5
- Clinical laboratory results, as described in Section 9.2.3.7
- AESIs, as described in Section 10.1.3 and Section 10.2.3
- AEs, as described in Section 10.2.1
- SAEs as described in Section 10.2.2

5.4. Pharmacokinetic Variables

The PK variable is the concentration of total linvoseltamab in serum over time. These sampling timepoints are specified in Table 14.

VV-RIM-00312509-1.0 Approved - 18 Aug 2023 GMT-5:00

5.5. Immunogenicity Variables

The immunogenicity variables are ADA status, titer, and neutralizing antibody (NAb) status and time point/visit. Samples in this study will be collected at the clinic visits specified in Table 13.

5.6. Pharmacodynamic and Other Biomarker Variables

Biomarker variables are the percentages of T, B, NK and monocytes over time in peripheral blood. The percentages of activated T and NK cells in peripheral blood over time assessed by markers such as CD69 and CD25 may be a reflection of target engagement by linvoseltamab and elotuzumab, respectively. Induction of serum cytokines such as IL-2, IL-6, IL-10, IFN gamma and TNF-alpha may reflect T-cell activation by linvoseltamab treatment. Both treatment arms may impact normal plasma cell survival, therefore the concentrations of serum polyclonal immunoglobulin IgG, IgA, IgE, and IgM (excluding the individuals with a myeloma subtype) will be evaluated over time. Other biomarkers related to MM or the mechanism of action of linvoseltamab may be evaluated, including sBCMA. Exploratory biomarkers are described in Section 9.2.6.

5.7. Patient-Reported Outcome Variables

Patient-reported outcome (PRO) variables include patient-reported symptoms, functioning, and general health status/QoL as measured by validated instruments BPI-SF (Cleeland, 1994), EORTC QLQ-C30 (Aaronson, 1993), EORTC QLQ-MY20 (Cocks, 2007) (Stead, 1999), and EQ-5D-5L (EuroQol., 2017). Two global anchors, the Patient Global Impression of Change (PGIC) and Patient Global Impression of Severity (PGIS) will be used to aid in the interpretation of EORTC QLQ-C30, EORTC QLQ-MY20 (Gary, 2020) (Guy, 1976), and BPI-SF. Symptomatic AEs and global side effects will be measured by the PRO-CTCAE (5 symptomatic toxicities including fatigue, dyspnea, nausea, sensory neuropathy, diarrhea) and FACIT GP5, respectively.

5.7.1. Variables from BPI-SF

BPI-SF variables include:

Pain Intensity

- BPI-SF Item 3: the “worst pain in the last 24 hours.”

Mean severity score of the four pain items (“worst pain,” “least pain,” “average pain,” and “pain now”) (a mean severity score) Pain interference

- Mean score of seven interference items, including general activity, walking, work, mood, enjoyment of life, relations with others, and sleep. This mean can be used if more than 50% or four of seven of the total items have been completed at an assessment point.

Pain response rate

- The proportion of pain responders, who are defined by having at least a 2-point reduction from baseline in the BPI-SF Item 3 “pain at its worst in the last 24 hours” without an increase in analgesic use

VV-RIM-00312509-1.0 Approved - 18 Aug 2023 GMT-5:00

Pain medication use

- Daily pain medication (captured by patient self-report via an electronic medication diary) will be used to contextualize change in pain intensity. Pain medication is categorized into non-opioids (eg, paracetamol or acetaminophen) and opioids (eg, codeine, hydromorphone, oxycodone, fentanyl) based on WHO's analgesic ladder ([(World Health Organziation Web Site)] 1986 and 2018). All opioids dosage per day will be converted into oral morphine equivalents (OME) (Chung, 2014).
- An 8-point scale (see Appendix 5) modified from Analgesic Quantification Algorithm (AQA) (Chung, 2014) will be used to categorize the analgesic dose intensity.
- Increase in analgesic use will be defined as a 2-point increase in the modified AQA (mAQA) scale score.

5.7.2. Variables from EORTC QLQ-C30

The EORTC QLQ-C30 scale scores will be calculated and missing data handled per developer instructions using the EORTC QLQ-C30 Scoring Manual (Fayers, 2001). The instrument yields the following scales:

- Global health status (GHS)/Quality of life (QoL) with 2 items
- Functional scales
  - Physical functioning (PF) with 5 items
  - Role functioning (RF) with 2 items
  - Emotional functioning (EF) with 4 items
  - Cognitive functioning (CF) with 2 items
  - Social functioning (SF) with 2 items
- Symptom scales / items
  - Fatigue (FA) with 3 items
  - Nausea and vomiting (NV) with 2 items
  - Pain (PA) with 2 items
  - Dyspnea (DY), insomnia (SL), appetite loss (AP), constipation (CO), diarrhea (DI) with 1 item each
- Financial impact (FI) with 1 item

Change from baseline in EORTC QLQ-C30 scale scores (transformed 0 to 100 scores) will be categorized as improvement/stable/deterioration using a 10-point threshold value based on literature (Osoba, 1998) (Kvam, 2010) and global anchors of PGIS and PGIC.

VV-RIM-00312509-1.0 Approved - 18 Aug 2023 GMT-5:00

5.7.3. Variables from EORTC QLQ-MY20

The EORTC QLQ-MY20 instrument yields the following scales:

- Disease symptoms (DS) with 6 items
- Side effects of treatment (SE) with 10 items
- Future perspective (FP) with 3 items
- Body image (BI) with 1 item

Change from baseline in EORTC QLQ-MY20 scale scores (transformed 0 to 100 scores) will be categorized as improvement/stable/deterioration using clinically meaningful thresholds identified based on literature (Sully, 2019) and global anchors of PGIS and PGIC.

5.7.4. Variables from EQ-5D-5L

EQ-5D-5L variables include:

- Five dimensions of mobility, self-care, usual activities, pain/discomfort and anxiety/depression
- EQ-5D-VAS

Change from baseline in item scores (raw scores) of the 5 dimensions and EQ-VAS will be classified as improvement/stable/deterioration based on literature and global anchors of PGIS and PGIC.

5.7.5. Variables from PRO-CTCAE and FACIT GP5

Treatment side-effects variables include:

- PRO-CTCAE (5 symptomatic toxicities including fatigue, dyspnea, nausea, sensory neuropathy, diarrhea)
- Overall treatment side effect per FACIT GP5 (a single item)

VV-RIM-00312509-1.0 Approved - 18 Aug 2023 GMT-5:00

6. STUDY DESIGN

6.1. Study Description and Duration

This is an open-label, phase 3, randomized, active controlled study designed to evaluate the efficacy and safety of linvoseltamab monotherapy vs EPd in participants with RRMM who have received 1 to 4 prior lines of therapy including a proteasome inhibitor and lenalidomide. Patients in the EU and the UK must have previously received 2 to 4 prior lines of therapy, including a CD38 antibody.

A total of 300 eligible participants, including approximately 230 participants who have previously received CD38 antibodies, will be randomized in a 1:1 ratio to the investigational arm (linvoseltamab monotherapy) or the active control arm, EPd (Figure 1).

Randomization will be stratified according to:

- the study participant's prior exposure to CD38 antibody and time since last CD38 antibody as follows: CD38 antibody ≤4 months from randomization vs CD38 antibody >4 months from randomization vs no prior CD38 antibody
- a composite of ISS Stage and extramedullary plasmacytomas (EMPs) as follows: participants with either International Staging System (ISS) Stage III and/or the presence of EMPs (EMP+) vs ISS Stage I/II/missing AND no EMPs (EMP-).

These stratification factors are also shown in Table 3. Up to 20% of participants may have extramedullary plasmacytomas at baseline. Participants should begin treatment in the assigned arm within 3 days from randomization. All study participants will be treated until either disease progression, or another protocol-defined discontinuation criterion has been met.

Figure 1: Study Flow Diagram

* Patients in the EU and the UK must have previously received 2 to 4 prior lines of therapy, including a CD38 antibody.

VV-RIM-00312509-1.0 Approved - 18 Aug 2023 GMT-5:00

Table 3: Stratification Factors

Stratification factors	
Prior CD38 antibody	CD38 antibody ≤4 months from randomization vs CD38 antibody >4 months from randomization vs no prior CD38 antibody
Composite of ISS Stage and Extramedullary Plasmacytoma (EMP) status	ISS Stage III and/or presence of EMPs vs ISS Stage I/II AND no EMPs

Each individual participant study flow consists of:

- **Screening period:** up to 28 days. After screening, upon eligibility assessment, participants will be randomized in a 1:1 ratio to either the investigational arm (linvoseltamab monotherapy) or the active control arm, EPd.
- **Treatment period:** variable duration.
  - Participants randomized to the **linvoseltamab treatment arm** will receive weekly linvoseltamab for 3 cycles (1 cycle = 28 days), followed by Q2W linvoseltamab administrations starting at cycle 4, until disease progression or until any criterion of study drug discontinuation is met. Beyond cycle 6, (week 24) for participants who achieve VGPR or better, the frequency of study drug administration will be decreased to every 4-week (Q4W) intervals. Participants on study after cycle 6 who do not achieve response of VGPR or better will continue with Q2W dosing until achieving VGPR or better (see Section 8.1.1).
  - Participants randomized to the **EPd arm** will be treated per package insert, until disease progression or until any criterion of study drug discontinuation is met (see Section 8.1.2).
- **Follow-up period:** variable duration. The follow-up period consists of a safety follow-up period (approximately 12 weeks [ie, 90 days]) and an efficacy follow-up period (until recurrence, start of subsequent MM therapy, or death).
- **Survival status:** variable duration. Participants who discontinue from the follow-up period but have not withdrawn consent will continue survival follow-up until death, loss to follow-up, participant withdrawal of consent for follow-up, or study termination by the sponsor, whichever is earlier. Participants may be followed remotely for survival information.

6.1.1. Study Stopping Rules

6.1.1.1. Individual Patient Stopping Rules

Reasons for permanent discontinuation of study drug are listed in Section 8.2.4.1.

6.1.1.2. Study Stopping Criteria

The study may be stopped by Regeneron in consultation with the Independent Data Monitoring Committee (IDMC). See Section 6.3.2.

VV-RIM-00312509-1.0 Approved - 18 Aug 2023 GMT-5:00

6.1.2. End of Study Definition

The definition for end of study (trial) is the date of global last participant's last visit, or the date of withdrawal from the study, or lost to follow-up (ie, the study participant can no longer be contacted by the investigator).

The end of study for an individual participant will be at the end of survival follow-up. All participants will continue survival follow-up until death, loss to follow-up, withdrawal of consent for follow-up, or study termination by the sponsor, whichever is earlier. The sponsor has the right to terminate the study at any time.

6.2. Planned Interim Analysis

One interim analysis of PFS data for all study participants and 2 interim analyses of OS are planned. A description of the statistical methods to be employed is in Section 11.5.

6.3. Study Committees

6.3.1. Study Steering Committee

The Study Steering Committee (SSC) is an advisory body composed of members appointed by Regeneron. The SSC responsibilities include advising the sponsor regarding study design, and protocol modification during study conduct, data analysis, and publication-related activities. The SSC will meet according to the defined frequency in the SSC charter and will conduct ad hoc meetings as needed.

6.3.2. Independent Data Monitoring Committee

An IDMC composed of members who are independent from the sponsor and the study investigators will monitor participant safety by conducting formal review of accumulated safety data according to defined frequency and IDMC charter and will conduct ad hoc meetings as needed. The IDMC will also evaluate pre-planned interim analysis results which will be provided by an independent statistician, or any other requested data for the purposes of a risk-benefit assessment. The IDMC will provide the sponsor with appropriate recommendations on the conduct of the clinical study (including potential study termination) to ensure the protection and safety of the participants enrolled in the study. The IDMC will also institute any measures that may be required for ensuring the integrity of the study results. The IDMC will act in an advisory capacity to Regeneron. Regeneron will have responsibility for the overall design and conduct of the study including communication of the data. All activities and responsibilities of the IDMC will be described in the IDMC charter.

6.3.3. Independent Review Committee

A blinded IRC composed of members who are independent from the sponsor and study investigators will review de-identified efficacy data for all participants enrolled in the study. The IRC will review data available from serum/urine laboratory assessments, bone marrow assessments and radiographic tumor assessments to determine response based on 2016 and 2011 IMWG response criteria. All activities and responsibilities of the IRC will be described in the IRC charter.

VV-RIM-00312509-1.0 Approved - 18 Aug 2023 GMT-5:00

7. SELECTION, WITHDRAWAL, AND REPLACEMENT OF PARTICIPANTS

7.1. Number of Participants Planned

Approximately 300 participants with RRMM who have received 1 to 4 prior lines of therapy including lenalidomide and a PI, including approximately 230 participants who have previously received CD38 antibodies, are planned for this study. Participants at EU and UK clinical sites must have previously received 2 to 4 prior lines of therapy, including a CD38 antibody.

The detailed justification for sample size is provided in Section 11.2.

7.2. Study Population

7.2.1. Inclusion Criteria

A participant must meet the following criteria to be eligible for inclusion in the study:

1. Age 18 years or older (or legal adult age in the country) at the time of the screening visit.
2. ECOG performance status ≤1. Patients with ECOG 2 solely due to local symptoms of myeloma (eg, pain) may be allowed after discussion with the Medical Monitor.
3. Participants with MM who have received at least 1 and no more than 4 prior lines of anti-neoplastic MM therapies including lenalidomide and a proteasome inhibitor and demonstrated disease progression on or after the last therapy as defined by the 2016 IMWG criteria. Participants who have received only 1 line of prior line of antimyeloma therapy must be lenalidomide refractory (including participants with progression on or within 60 days of the last dose of lenalidomide given as maintenance). Participants in the EU and the UK must have previously received 2 to 4 prior lines of therapy, including a CD38 antibody.
4. Participants must have the following measurable disease for response assessment as per the 2016 IMWG response assessment criteria.

   Measurable disease is defined as 1 or more of the following:

   - Serum M-protein ≥5 g/L (≥0.5 g/dL).*
   - Urine M-protein ≥200 mg/24 hr.
   - Free light chain (FLC) assay with involved FLC level ≥100 mg/L (10 mg/dL) with an abnormal serum FLC ratio (normal ratio 0.26 to 1.65).
   - Quantitative immunoglobulin levels of ≥500 mg/dL (≥0.5 g/dL; Immunoglobulin A [IgA] and IgD myeloma only). Note: For participants with IgA and IgD myelomas, quantitative immunoglobulin measurements are preferred to monitor disease and response (Visram, 2021).*

   In addition, participants must have evidence of adequate bone marrow reserves and adequate hepatic, renal, and cardiac function.

VV-RIM-00312509-1.0 Approved - 18 Aug 2023 GMT-5:00

*Patients eligible solely based on serum M-protein (or quantitative immunoglobulins) ≥0.5 g/dL and <1 g/dL will be capped to ≤5% of the total study population.

5. Adequate hematologic function within 7 days of randomization as measured by:
   - Platelet count ≥75 x 10^9/L for participants in whom <50% of bone marrow nucleated cells are plasma cells; otherwise, platelet count ≥50 x 10^9/L. A participant may not have received a platelet transfusion within 7 days in order to meet this requirement.
   - Absolute neutrophil count (ANC) ≥1.0 x 10^9/L. A participant may not have received granulocyte colony stimulating factor (G-CSF) within 2 days in order to meet this requirement.
   - Hemoglobin ≥8.0 g/dL. Red blood cell transfusions are permitted in order to meet this requirement.
6. Adequate hepatic function within 7 days of randomization, defined as:
   - Total bilirubin ≤1.5 x ULN
     - Participants with Gilbert syndrome do not need to meet this total bilirubin requirement provided that the total bilirubin is unchanged from the baseline value.
   - Transaminase (ALT, AST) ≤2.5 x ULN.
7. Serum creatinine clearance by Cockcroft Gault >30 mL/min within 7 days of randomization.

   A participant with a creatinine clearance by Cockcroft-Gault who does not meet eligibility criteria may be considered for enrollment if a measured creatinine clearance, based on 24-hour urine collection or another reliable method is >30 mL/min.
8. Corrected serum calcium ≤14 mg/dL (≤3.5 mmol/L) or free ionized calcium <6.5 mg/dL within 7 days of randomization.
9. Life expectancy of at least 6 months.
10. Recovery to grade 1 or baseline of any non-hematologic toxicities due to prior treatments, excluding alopecia and grade 2 peripheral neuropathy.
11. Willing and able to comply with clinic visits and study-related procedures.
12. Sign informed consent.
13. Able to understand and complete study-related questionnaires.

VV-RIM-00312509-1.0 Approved - 18 Aug 2023 GMT-5:00

7.2.2. Exclusion Criteria

A participant who meets any of the following criteria will be excluded from the study:

1. Diagnosis of plasma cell leukemia, amyloidosis (including myeloma associated amyloidosis), Waldenström macroglobulinemia (lymphoplasmacytic lymphoma), or POEMS syndrome (polyneuropathy, organomegaly, endocrinopathy, monoclonal protein, and skin changes).
2. Prior treatment with elotuzumab and/or pomalidomide.
3. Participants with known MM brain lesions or meningeal involvement.
4. Treatment with any systemic anti-cancer therapy within 5 half-lives or within 28 days before first administration of study drug, whichever is shorter.
5. History of allogeneic stem cell transplantation within 6 months, or autologous stem cell transplantation within 12 weeks of the start of study treatment. Participants who have received an allogeneic transplant must be off all immunosuppressive medications for 6 weeks without signs of graft-versus-host disease. Steroids at doses equivalent to suppletion doses may be acceptable.
6. Prior treatment with BCMA directed immunotherapies, including BCMA bispecific antibodies and BiTEs (Bispecific T-cell engagers) and BCMA CAR T-cells. Note: BCMA antibody-drug conjugates are allowed.
7. Treatment with systemic corticosteroid treatment with more than 10 mg per day of prednisone or steroid equivalent within 72 hours of start of study drug.
8. History of neurodegenerative condition or CNS movement disorder.
9. History of seizure within 12 months before randomization.
10. Uncontrolled psychiatric illness, or psychiatric illness requiring hospitalization within the prior 12 months.
11. Live or live attenuated vaccination within 28 days before first study drug administration with a vector that has replicative potential.
12. Has received a COVID-19 vaccination within 1 week of planned start of study medication or for which the planned COVID-19 vaccinations (initial series or booster[s]) would not be completed 1 week prior to start of study drug. Other vaccines without the potential to replicate should be planned similarly.
13. Myelodysplastic syndrome or another malignancy in the past 3 years, except for non-melanoma skin cancer that has undergone potentially curative therapy, in situ carcinoma that has been deemed to be effectively treated with definitive local control and with curative intent with no evidence of recurrence, thyroid cancer that has been surgically treated with curative intent or low-risk early stage prostate adenocarcinoma (T1-T2aN0M0 and Gleason score ≤6 and prostate-specific antigen (PSA) ≤10 ng/mL) for which the management plan is active surveillance.
14. Has any medical condition, comorbidity, physical examination finding, or metabolic dysfunction, or clinical laboratory abnormality that, in the opinion of the investigator

VV-RIM-00312509-1.0 Approved - 18 Aug 2023 GMT-5:00

renders the participant unsuitable for participation in a clinical study due to high safety risks and/or potential to affect interpretation of results of the study.

15. Cardiac ejection fraction <40% by echocardiogram or multi-gated acquisition (MUGA) scan.
16. Significant cardiovascular disease (eg, New York Heart Association Class III or IV cardiac disease, myocardial infarction, stroke, or transient ischemic attack within the previous 6 months, unstable arrhythmias or unstable angina) and/or significant pulmonary disease (eg, obstructive pulmonary disease and history of symptomatic bronchospasm or pulmonary compromise requiring supplemental oxygen use to maintain adequate oxygenation).
17. Any infection requiring hospitalization or treatment with intravenous (IV) anti-infectives within 2 weeks of first administration of study drug.
18. Uncontrolled infection with human immunodeficiency virus (HIV), hepatitis B virus (HBV), hepatitis C virus (HCV), or another uncontrolled infection (such as cytomegalovirus [CMV]). Additional guidelines for HIV, HBV, and HCV are:
    a) Participants with HIV who have controlled infection (undetectable viral load and CD4 count above 350 cells/µL, either spontaneously or on a stable antiviral regimen) are permitted.
    b) Participants with hepatitis B surface antigen (HbsAg+) who have controlled infection (serum hepatitis B virus DNA polymerase chain reaction [PCR] that is below the limit of detection AND receiving antiviral therapy for HBV) are permitted. Patients with controlled infections must undergo periodic monitoring of HBV DNA. Patients must remain on anti-viral therapy for at least 6 months beyond the last dose of study drug.
    c) Participants who are HCV antibody positive who have controlled infection (undetectable HCV RNA by PCR, either spontaneously or in response to a successful prior course of anti-HCV therapy) are permitted.
19. History of severe allergic reaction attributed to any study drug or excipient. A severe allergic reaction is defined for this purpose as requiring hospitalization and/or treatment with epinephrine.
20. Known hypersensitivity to both allopurinol and rasburicase.
21. Is committed to an institution by virtue of an order issued either by judicial or administrative authorities.
22. Is currently receiving treatment in another interventional study.
23. Radiation therapy other than local therapy for myeloma-associated bone lesions within 14 days prior to randomization.
24. Any active gastrointestinal dysfunction interfering with the participant's ability to swallow tablets, or any active gastrointestinal dysfunction that could interfere with absorption of study treatment.
25. Members of the clinical site study team and/or his/her immediate family unless prior approval granted by the Sponsor.

VV-RIM-00312509-1.0 Approved - 18 Aug 2023 GMT-5:00

26. Pregnant or breastfeeding women.
27. Women of childbearing potential (WOCBP)* or sexually active men** who are unwilling to practice highly effective contraception for at least 4 weeks prior to the initial dose/start of the first treatment, during the study, and for at least 6 months after the last dose, even in case of dose interruption, unless the participant commits to absolute and continuous abstinence confirmed on a monthly basis. Highly effective contraceptive measures include:
    - Implant;
    - Levonorgestrel-releasing intrauterine system;
    - Medroxyprogesterone acetate depot;
    - Tubal sterilization;
    - Sexual intercourse with a vasectomized male partner only; vasectomy must be confirmed by 2 negative semen analyses¥;
    - Ovulation inhibitory progesterone-only pills (ie, desogestrel); and/or
    - Sexual abstinence†, ‡.

    See Section 8.7.2 for additional guidance.

    *WOCBP are defined as women who are fertile following menarche until becoming postmenopausal, unless permanently sterile. Permanent sterilization methods include hysterectomy, bilateral salpingectomy, and bilateral oophorectomy.

    A postmenopausal state is defined as no menses for 12 months without an alternative medical cause. A high follicle stimulating hormone (FSH) level in the postmenopausal range may be used to confirm a postmenopausal state in women not using hormonal contraception or hormonal replacement therapy. However, in the absence of 12 months of amenorrhea, a single FSH measurement is insufficient to determine the occurrence of a postmenopausal state. The above definitions are according to the Clinical Trial Facilitation Group (CTFG) guidance. Pregnancy testing and contraception are not required for women with documented hysterectomy.

    **Male study participants with WOCBP partners are required to use condoms during the study and for at least 6 months (180 days) after the last dose, unless they are vasectomized ¥ or practice sexual abstinence †, ‡. Male study participants should not donate sperm during the study and for at least 6 months (180 days) after the last dose.

    WOCBP study participants should not donate ova during the study and for at least 6 months after the last dose.

    †Sexual abstinence is considered a highly effective method only if defined as refraining from heterosexual intercourse during the entire period of risk associated with the study drugs. The reliability of sexual abstinence needs to be evaluated in relation to the duration of the clinical trial and the preferred and usual lifestyle of the subject.

    ‡Periodic abstinence (calendar, symptothermal, post-ovulation methods), withdrawal (coitus interruptus), spermicides only, and lactational amenorrhea method (LAM) are not

VV-RIM-00312509-1.0 Approved - 18 Aug 2023 GMT-5:00

acceptable methods of contraception. Female condom and male condom should not be used together.

¥ Vasectomized partner or vasectomized study participant must have received medical assessment of the surgical success.

28. Has a history of tuberculosis or systemic fungal diseases.

7.3. Premature Withdrawal from the Study

A participant has the right to withdraw from the study at any time, for any reason, and without repercussion.

The investigator and/or sponsor have the right to withdraw a participant from the study if it is no longer in the interest of the participant to continue in the study, or if the participant's continuation in the study places the scientific outcome of the study at risk (eg, if a participant does not or cannot follow study procedures). An excessive rate of withdrawals would render the study uninterpretable; therefore, unnecessary withdrawal of participants should be avoided.

Participants who are withdrawn prematurely from the study will be asked to complete the early termination visit, as described in Section Table 15.

Rules for discontinuation of study treatment (permanent or temporary) are discussed in Section 8.2.

7.4. Replacement of Participants

Participants may only be replaced prior to randomization. Once randomized, participants prematurely discontinued from study/study drug will not be replaced.

VV-RIM-00312509-1.0 Approved - 18 Aug 2023 GMT-5:00

8. STUDY TREATMENTS

8.1. Investigational and Reference Treatments

Table 4: Study Interventions Administered

Intervention Label	Arm 1		Arm 2		
Intervention Name	Linvoseltamab	Diluent for linvoseltamab (if necessary)	Elotuzumab	Pomalidomide	Dexamethasone
Dose Formulation	Sterile solution	Sterile solution	Lyophilized powder	Capsule	Tablet, capsule, sterile solution or lyophilized powder
Unit Dose Strength(s)	10 mg/mL	N/A	300 mg, 400 mg	4 mg, 3 mg, 2 mg, 1 mg	40 mg, 20 mg, 8 mg, 4 mg
Dosage Level(s)	See Section 8.1.1	N/A	10, 20 mg/kg; See Section 8.2.2 and 8.1.2	See Section 8.1.2 and Section 8.2.2	40 mg, 20 mg, 28 mg, 8 mg; See Section 8.1.2, 8.2.2, and 8.1.1.2
Route of Administration	IV infusion	IV infusion	IV infusion	Oral	Oral or IV infusion
Use	Experimental	Diluent	Active comparator	Active comparator	Premedication/ active comparator
IMP/NIMP/ AxMP	IMP	IMP	IMP	IMP	IMP
Sourcing	Provided centrally by the sponsor	Provided centrally by the sponsor	Provided centrally by the sponsor or locally by the study site	Provided centrally by the sponsor or locally by the study site	Provided centrally by the sponsor or locally by the study site
Packaging and Labeling	linvoseltamab will be provided in sterile single-use vials. Each vial will be labeled as required per country requirements.	Diluent for linvoseltamab will be provided in sterile single-use vials. Each vial will be labeled as required per country requirements.	Elotuzumab will be provided as vials in cartons. Each will be labeled as required per country requirements.	Pomalidomide will be provided in blisters in cartons. Each carton will be labeled as required per country requirements.	Dexamethasone will be provided in bottles, cartons, vials or ampoules. Vials or ampoules will include cartons. Each container will be labeled as required per country requirements.

(Empliciti (elotuzumab) [Package Insert]), (Pomalyst (pomalidomide) [Package Insert]), (Decadron [USP], 2004)

VV-RIM-00312509-1.0 Approved - 18 Aug 2023 GMT-5:00

Linvoseltamab, pomalidomide, and dexamethasone will not be dependent on participant weight or body surface area (BSA). Elotuzumab dose is weight-based according to the package insert.

Information on dose preparation and administration of study drugs can be found in the Pharmacy Manual and will be consistent with regulatory approvals, if applicable. Depending upon the dose, use of linvoseltamab diluent may or may not be necessary. Similarly, pomalidomide doses may be provided from combination of lower strength capsules. Not all pomalidomide capsule strengths will necessarily be used in the study but may be used. See the Pharmacy Manual for details.

A pharmacist or other qualified individual will be identified at each site to prepare all study drugs for administration.

8.1.1. Investigational Treatment: Linvoseltamab Monotherapy

Participants will receive treatment with linvoseltamab monotherapy on 28-day cycles (see Figure 2). During cycle 1, participants will undergo step-up dosing with linvoseltamab on the following schedule: day 1 (5 mg), day 8 (25 mg), followed by 2 full doses of 200 mg linvoseltamab on day 15 and day 22. Participants will receive 200 mg linvoseltamab QW during cycles 2 to 3, and every 2 weeks (Q2W) in cycles 4 to 6. Beyond cycle 6 (week 24), for participants who achieve VGPR or better, the frequency of study drug administration will be decreased to Q4W intervals. Participants on study after cycle 6 who do not achieve response of VGPR or better will continue with Q2W dosing until achieving VGPR or better. Treatment will continue until disease progression or another discontinuation criterion has been met.

During cycle 1, linvoseltamab will be administered as a single infusion over 4 hours (±15 min). If linvoseltamab is adequately tolerated during cycle 1 without any grade of CRS or IRR, then subsequent linvoseltamab infusions may be reduced to 1 hour. If the 1-hour infusion is tolerated, then subsequent infusions may be reduced to 30 minutes.

Figure 2: Arm 1: Linvoseltamab Dosing Schedule

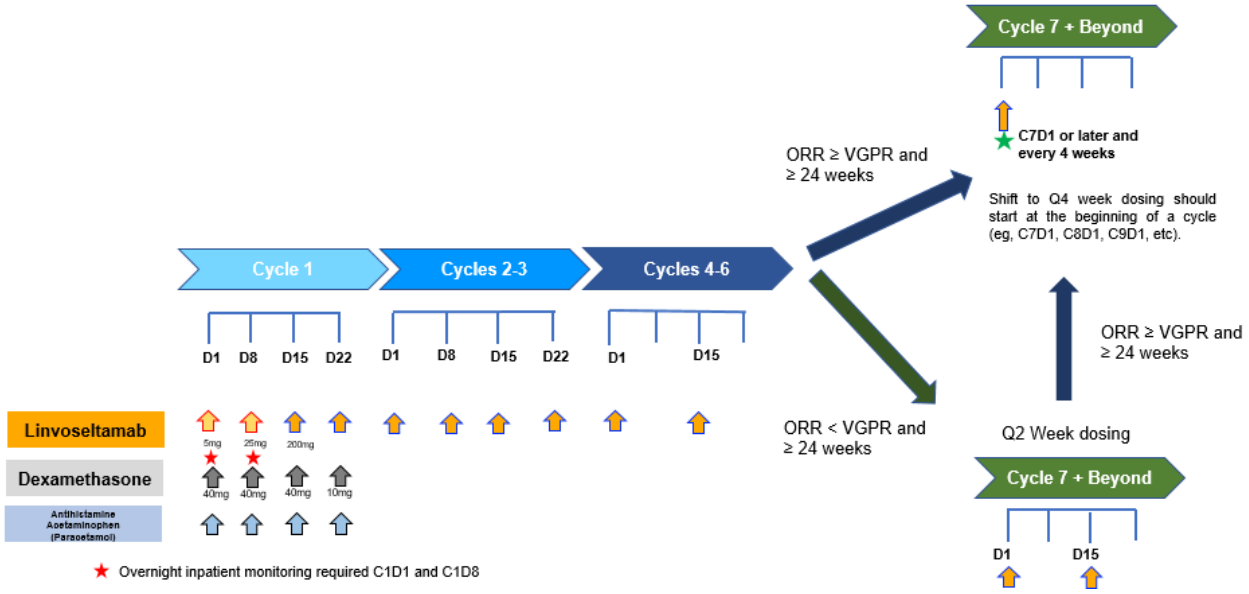

VV-RIM-00312509-1.0 Approved - 18 Aug 2023 GMT-5:00

8.1.1.1. Use of a Monitored Setting for Linvoseltamab Administration

All study participants are to receive linvoseltamab infusion in a monitored setting with subsequent inpatient monitoring and observation for the first 24 hours after the end of study drug administration during the initial dose (C1D1) and the intermediate dose (C1D8).

Inpatient monitoring from week 3 (C1D15) onwards is only required if a participant has not completed initial step-up dosing but may be implemented in other participants at the discretion of the investigator.

For the purposes of this trial, a monitored setting is defined as a setting where participants are under the supervision of a health care provider (eg, doctor, nurse practitioner, or physician's assistant), such as an infusion center or inpatient unit in a hospital where access to life saving measures is readily available.

In addition, the requirement and guidance for use of a monitored setting, infusion rate or repeating dose due to tolerability management for IRR/CRS are described in Table 10. For the detailed administration schedule of linvoseltamab, see Table 13.

8.1.1.2. Premedication for Linvoseltamab Administration

Premedication with dexamethasone, antihistamines, acetaminophen (paracetamol), is required in cycle 1 for all participants receiving linvoseltamab as described in Table 5.

Table 5: Premedication for Linvoseltamab Administration During Cycle 1 (Step-up and the first two full doses)

Premedication	Pre-linvoseltamab dose
Dexamethasone	40 mg IV (except as noted below for 2nd full dose) 1 to 3 hr prior to dose
Antihistamine (eg, diphenhydramine [Benadryl])	25 mg IV or PO (or equivalent) 30 to 60 min prior to dose
Acetaminophen (Paracetamol)	650 to 1000 mg PO 30 to 60 min prior to dose

IV=Intravenous; PO=Orally

If the participant experiences IRR and/or CRS of any grade during cycle 1, continue premedication until the full dose of 200 mg as a single infusion is tolerated without experiencing IRR and/or CRS.

If the full dose administered as a single infusion is adequately tolerated without any CRS or IRR event of any grade, the investigator is encouraged to reduce the dexamethasone dose to 10 mg with the next infusion.

If this linvoseltamab administration with dexamethasone 10 mg is also adequately tolerated by the participant without any CRS or IRR event of any grade, then discontinuation of the corticosteroid with subsequent administration is encouraged.

However, if continued corticosteroid administration is warranted, another intermediate or long-acting corticosteroid (eg, methylprednisolone) may be substituted for dexamethasone.

VV-RIM-00312509-1.0 Approved - 18 Aug 2023 GMT-5:00

8.1.2. Comparator Treatment: Elotuzumab/Pomalidomide/Dexamethasone (EPd)

Participants will receive treatment with EPd on 28-day cycles as described in Table 6 and Figure 3.

Treatment with study therapy continues until disease progression, unacceptable toxicity (AE related to study drug), or participant meets other criteria for discontinuation of study drug.

Table 6: Dosing Schedule for Elotuzumab (in mg/kg) in Combination with Pomalidomide and Dexamethasone (mg)

Cycle	**Cycle 1 and 2**				**Cycle 3 onwards**			
Day of Cycle	**D1**	**D8**	**D15**	**D22**	**D1**	**D8**	**D15**	**D22**
Premedication*	X	X	X	X	X			
Elotuzumab (mg/kg) IV	10	10	10	10	20			
Pomalidomide (4 mg) orally	Days 1-21				Days 1-21			
Dexamethasone† (mg) orally ≤75 years old	28	28	28	28	28	40	40	40
Dexamethasone† (mg) orally >75 years old	8	8	8	8	8	20	20	20
Dexamethasone** (mg) IV	8	8	8	8	8			

*Premedicate with the following 45 to 90 minutes prior to elotuzumab infusion: 8 mg IV dexamethasone, H1 blocker: diphenhydramine (25 to 50 mg orally or IV) or equivalent; H2 blocker: ranitidine (50 mg intravenously or 150 mg orally) or equivalent; acetaminophen (650 to 1000 mg orally)
† Oral dexamethasone taken between 3 to 24 hours before elotuzumab infusion.
** Intravenous dexamethasone 45-90 minutes before elotuzumab infusion.

VV-RIM-00312509-1.0 Approved - 18 Aug 2023 GMT-5:00

Figure 3: Arm 2: Elotuzumab + Pomalidomide + Dexamethasone Dosing Schedule

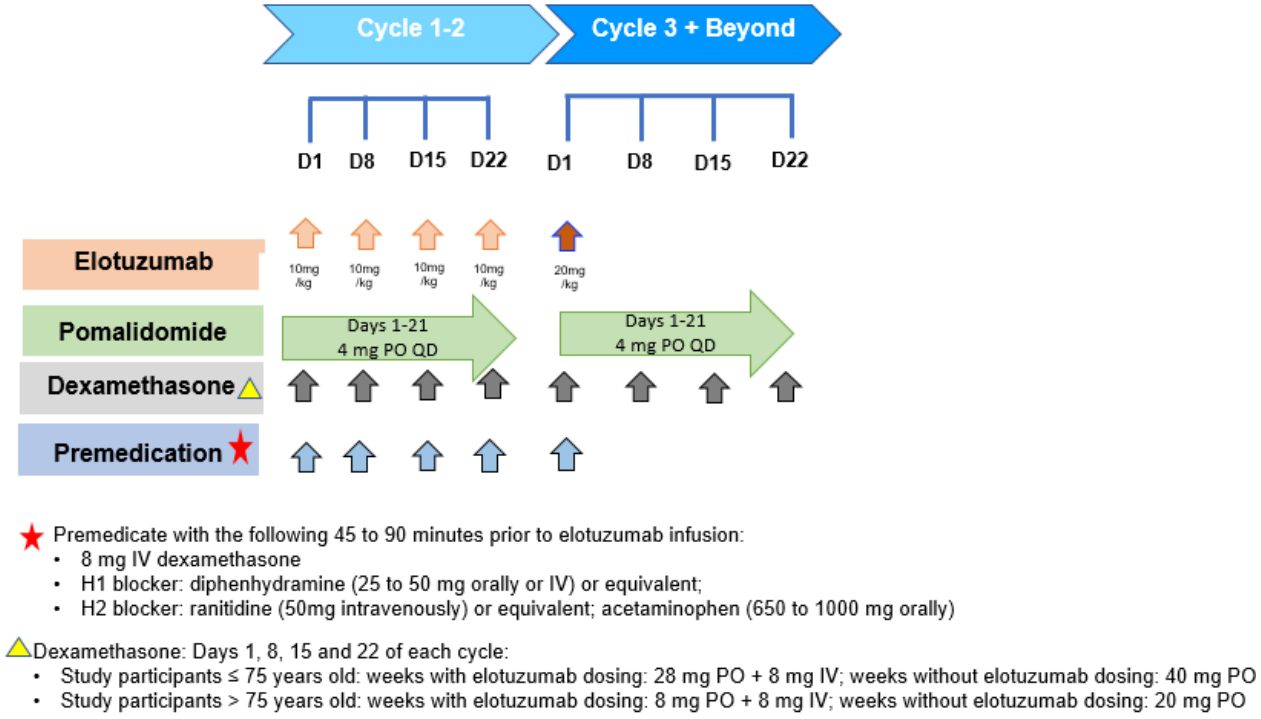

8.2. Dose Modification and Study Treatment Discontinuation Rules

8.2.1. Linvoseltamab Dose Modification

Participants who experience grade ≥3 treatment related toxicity (excluding laboratory abnormalities that are considered to be clinically insignificant and that do not meet criteria for an AE), that is not otherwise specified in the protocol, should pause study treatment until the toxicity resolves to grade 1 or baseline, or until the toxicity is stable and manageable through supportive therapy. The participant may restart study treatment at the same dose or a reduced dose (or reduced dosing frequency) if in the judgment of the investigator and the sponsor it is in the best interest of the participant.

For clinically significant grade 3 hematologic toxicity:

- Therapy should be temporarily paused in the following situations: grade 3 thrombocytopenia with bleeding, grade 3 febrile neutropenia, or grade 3 neutropenia with documented infection.
- Therapy (if paused) can be restarted when toxicity resolves to grade 2

For clinically significant grade 4 hematologic toxicity:

- Therapy should be temporarily paused
- Therapy can be restarted when toxicity resolves to grade 2

VV-RIM-00312509-1.0 Approved - 18 Aug 2023 GMT-5:00

- Therapy should be permanently discontinued if toxicity does not resolve to grade <4 within 2 weeks of last infusion or to grade 2 (neutropenia) or grade 1 or baseline (others) within 12 weeks of last infusion with appropriate therapy

Participants who experience grade 3 non-hematologic toxicity, that is not otherwise specified in this protocol, should pause treatment until the toxicity resolves to grade 1 or baseline. Exceptions to this guideline include laboratory abnormalities that are considered to be clinically insignificant, or do not meet the criteria for an AE.

Study treatment should usually be permanently discontinued in the event of treatment-related (or potentially treatment-related) grade 4 non-hematologic toxicity, although resumption may be considered if a grade 4 infection resolves to grade ≤1. In addition, linvoseltamab dosing may be resumed if a grade 4 toxicity was related to the underlying malignancy, it has resolved to grade 1 or baseline or deemed irreversible and clinically stable with supportive treatment and there has been documentation of reduction in the tumor burden, or the participant has received fewer than 4 full doses of therapy. Treatment may restart at the same dose the participant last received or at a lower dose, after discussion with the sponsor in order to select a dose in the participant's best interest. Participants who have recovered from AEs that lead to delays in study drug administration do not need to follow the dosing window as per the schedule of events table for resumption of the next dose. See 8.2.3 for visit schedule.

For participants who had temporary treatment interruption, the sponsor should be consulted to discuss the participant's individual risk factors, such as prior history of CRS, before re-instituting study therapy. See Table 7 for guidelines on treatment resumption after dosing delay.

Table 7: Guidelines on Treatment Resumption After Dosing Delay

Last Dose Administered of Linvoseltamab	Time Since the Last Dose Administered	Action for Next Dose(s)
5 mg Cycle 1 Day 1	≤ 14 days	25 mg* Escalate to 200 mg as tolerated
	> 14 days	5 mg* Escalate to 25 mg then 200 mg as tolerated
25 mg Cycle 1 Day 8	≤ 14 days	200 mg*
	>14 - ≤28 days	25 mg* Escalate to 200 mg as tolerated
	>28 days	5 mg* Escalate to 25 mg then 200 mg as tolerated
200 mg	≤ 49 days	200 mg
	> 49 days	5 mg then escalate weekly to 25 mg then 200 mg as tolerated before resuming previous dosing interval

*A lower dose may be appropriate if delay is caused by CRS, ICANS, or any grade 3-4 AE. See Table 10 and Table 12 for guidance related to CRS and ICANS.

VV-RIM-00312509-1.0 Approved - 18 Aug 2023 GMT-5:00

Participants who experience a first treatment delay of >60 days due to a grade ≤3 AE may be permitted to resume study treatment following a review by the investigator with the medical monitor of the benefit-risk of restarting vs permanently discontinuing linvoseltamab. Participants with recurrent prolonged treatment delay or delays >60 days due to a grade 4 AE will be required to permanently discontinue study therapy. Similarly, if any participant experiences a dose delay 30-60 days due to an AE, the participant and the investigator should consider the benefits and risks of restarting vs permanently discontinuing study treatment and the investigator should discuss treatment resumption with the medical monitor.

Premedication for treatment that is resumed will be as per Table 5 for delays >21 days if before single full dose administration or >60 days after single full dose administration. For shorter delays, premedication per Table 5 may be used at the investigator's discretion. If the infusion is tolerated without CRS or IRR events of any grade, then premedication may be tapered according to Section 8.3.2.

8.2.2. Dose Modification and Study Drug Discontinuation for Elotuzumab, Pomalidomide, and Dexamethasone

Guidance in this section is based on the US Prescribing Information and Summary of Product Characteristics (European Union) for elotuzumab and pomalidomide. Local regulatory guidance should be followed when it differs from below.

If the dose of one drug in the regimen is delayed, interrupted, or discontinued, the treatment with the other drugs may continue as scheduled. However, if dexamethasone is delayed or discontinued, the decision whether to administer elotuzumab should be based on clinical judgment (ie, risk of hypersensitivity). See 8.2.3 for visit schedule if the entire regimen is delayed.

8.2.2.1. Dose Modification and Study Drug Discontinuation for Elotuzumab

If a grade 2 or higher infusion reaction occurs during elotuzumab administration, interrupt the infusion and institute appropriate medical and supportive measures. Upon resolution to grade 1 or lower, restart elotuzumab at 0.5 mL/min and gradually increase at a rate of 0.5 mL/min every 30 minutes as tolerated to the rate at which the infusion reaction occurred. Resume the escalation regimen if there is no recurrence of the infusion reaction.

In participants who experience an infusion reaction, monitor vital signs every 30 minutes for 2 hours after the end of the elotuzumab infusion. If the infusion reaction recurs, stop the elotuzumab infusion and do not restart on that day. Severe infusion reactions may require permanent discontinuation of elotuzumab therapy and emergency treatment.

8.2.2.2. Dose Modification and Study Drug Discontinuation for Pomalidomide

Initiate a new cycle of pomalidomide when the neutrophil count is at least 500/mcL (0.5×10^9/L) and the platelet count is at least 50,000/mcL (50×10^9/L).

Recommended actions and dosage modifications for hematologic adverse reactions related to pomalidomide are presented in Table 8.

VV-RIM-00312509-1.0 Approved - 18 Aug 2023 GMT-5:00

Table 8: Pomalidomide Dose Modifications for Hematologic Adverse Reactions

Hematologic Toxicity		Dose Modification
Neutropenia	ANC <0.5 x 10^9/L or febrile neutropenia (fever ≥38.5ºC and ANC <1 x 10^9/L)	Interrupt pomalidomide treatment and follow CBC weekly until ANC ≥1 x 10^9/L, then resume at 1 mg less than previous dose.
	Each subsequent drop <0.5 x 10^9/L	Interrupt pomalidomide treatment until ANC ≥1 x 10^9/L, then resume at 1 mg less than previous dose.
Thrombocytopenia	Platelet count <25 x 10^9/L	Interrupt pomalidomide treatment and follow CBC weekly until platelets rise to ≥50 x 10^9/L, then resume at 1 mg less than previous dose.
	Each subsequent drop <25 x 10^9/L	Interrupt pomalidomide treatment until platelets ≥50 x 10^9/L, then resume at 1 mg less than previous dose.

ANC=absolute neutrophil count; CBC=complete blood count

If strong inhibitors of cytochrome P450 (CYP)1A2 (eg, ciprofloxacin, enoxacin, and fluvoxamine) are co-administered with pomalidomide, reduce the dose of pomalidomide by 50%.

Refer to the current approved pomalidomide prescribing information for guidance regarding dose interruption or reduction in response to other adverse reactions.

8.2.3. Resuming Treatment After Dose Delay

8.2.3.1. Arm 1 (Linvoseltamab)

If a study participant experiences a dosing delay, dosing will resume at the next scheduled dosing day and may occur outside the prescribed dosing window (ie, the study clock stops). For example, if a participant has a 4-week delay after C3D15 dosing visit, dosing will resume at C3D22 dosing visit.

Participants who require repeat step-up dosing will receive weekly therapy through the first full dose regardless of the frequency of administration of linvoseltamab in that cycle. For example, if a participant has a prolonged delay after C5D1 dosing visit, treatment will resume with 5 mg C5D15 and 25 mg C5D22 visits.

8.2.3.2. Arm 2 (Elotuzumab + Pomalidomide + Dexamethasone)

Missed doses in a cycle will not be made up. If the dosing delay extends past the beginning of the next planned cycle, dosing will resume at the first scheduled dosing day of the next planned cycle, based on clinical judgment. For example, if a patient has a 4-week delay after C3D15, dosing will resume at the first scheduled dose in cycle 4.

VV-RIM-00312509-1.0 Approved - 18 Aug 2023 GMT-5:00

Participants may continue on study therapy even if components of the study therapy must be discontinued. Participants are considered still on study therapy even if they continue solely on pomalidomide or dexamethasone. Details for each component of EPd are below.

Elotuzumab
If oral or intravenous dexamethasone is delayed or discontinued, the administration of elotuzumab should be based on clinical judgment (eg, risk of hypersensitivity).

Dexamethasone
Dexamethasone delay should be performed as clinically indicated at the discretion of the investigator.

For participants receiving elotuzumab, the weekly dexamethasone that coincides with or is temporally closest to the next elotuzumab dosing must be administered as part of the premedication for elotuzumab per the guidance in Table 6 and Figure 3.

Pomalidomide
Pomalidomide delay should be performed as clinically indicated at the discretion of the investigator.

Participants should be instructed that if a dose of pomalidomide has been missed and it has been less than 12 hours since the participant's regular dosing time, to take pomalidomide as soon as the participant remembers. If it has been more than 12 hours, the dose must be skipped. Participants should not take 2 doses at the same time.

8.2.4. Study Drug Discontinuation

Participants who permanently discontinue from study drug should be encouraged to remain in the study. Those who agree and do not withdraw from the study will be asked to return to the clinic for all remaining study visits per the visit schedule.

Participants who permanently discontinue from study drug and who opt to withdraw from the study will be asked to complete study assessments, per Section 9.1.2.

8.2.4.1. Reasons for Permanent Discontinuation of Study Drug

Study drug dosing will be permanently stopped in the event of:

- Confirmed disease progression, as per IMWG criteria (participants with suspected pseudo-progression or delayed response may continue study drug until such a time that there is definitive evidence of disease progression)
- Start of an alternative anti-cancer treatment, with the exceptions including radiation therapy or other local therapy for pain control (See Section 8.7.2 for permitted medications)
- Evidence of pregnancy
- Serious and/or severe allergic reactions considered related to study drug
- Specific types of liver dysfunction (eg, Hy's law is met) except in the context of CRS (FDA, 2009)
- Participant withdrawal of consent at any time

VV-RIM-00312509-1.0 Approved - 18 Aug 2023 GMT-5:00

- Any medical condition that the investigator or sponsor determines may jeopardize the participant's safety if he or she continues in the study or continues treatment with study drug
- The investigator determines it is in the best interest of the participant
- Participant non-compliance (eg, not complying with protocol-required visits, assessments, and dosing instructions)
- Tuberculosis or uncontrolled opportunistic infection (including but not limited to CMV or Pneumocystis jirovecii pneumonia [PJP] unresponsive to therapy)
- Diagnosis of another malignancy during the study except non-melanoma skin cancer curable with local therapy or in situ cancers
- Grade 3 CRS lasting >48 hours or recurrent grade 3 CRS of any duration
- Recurrent grade 3 neurologic toxicity, including ICANS.
- Any grade 4 toxicity
- Exceptions:
  - Hematologic laboratory abnormalities that resolve to grade ≤2. Further details on timeframe for resolution is detailed in Section 8.2.1.
  - Isolated non-hematologic lab abnormalities without clinical consequence, or isolated non-hematologic lab abnormalities that resolve within 72 hours
  - Grade 4 infections that resolve to grade ≤1. Permanent discontinuation should also be considered.
  - The study drug may be resumed if the grade 4 non-hematologic toxicity was related to the underlying malignancy, it has resolved to grade 1 or baseline (or cannot resolve) and there has been documentation of reduction in the tumor burden, or the participant has received fewer than 4 full doses of therapy. An example is (temporary or transitory) tumor flare of a plasmacytoma impinging on a nerve with associated neurologic signs or symptoms.

8.3. Safety Monitoring and Management of Specific Toxicities and Acute Reactions

Multiple measures will be taken to ensure the safety of participants in this trial. This includes stringent eligibility criteria, close clinical safety monitoring according to the schedule of assessments, and requirement for inpatient monitoring.

Clinical monitoring will include frequent study visits and evaluation by study staff, including physical exams, and routine and specialty laboratory testing, in addition to assessment for toxicity and AEs. Monitoring will include, but will not be limited to, vital signs (with specific attention to temperature and blood pressure), oxygen saturation, clinical assessments, and laboratory evaluations. Also, CRS/IRR events during the step-up period will be reviewed periodically by the sponsor.

VV-RIM-00312509-1.0 Approved - 18 Aug 2023 GMT-5:00

CRS and IRR are important identified risks of linvoseltamab. CRS can be difficult to distinguish from IRR but typically occurs following initial exposure and/or dose escalation and wanes in frequency and severity with subsequent exposure. Because most CRS/IRR signs and symptoms emerge during infusion or within hours of infusion, a 24-hour period of inpatient monitoring following completion of select linvoseltamab infusions has been implemented. This precautionary measure is informed by FIH data from study R5458-ONC-1826 where (as of 01Sep22) the median time to onset of CRS was 11.7 hours from the start of the infusion, and the median duration of each CRS event was 15.4 hours. In addition, using 5mg/25mg step up regimen, there were no cases of grade ≥2 CRS that began more than approximately 24 hours after the infusion (see linvoseltamab Investigator's Brochure). Further observation may be warranted at the discretion of the investigator. Dose management guidance for linvoseltamab is provided below.

Detailed management guidance for specific AEs that are anticipated such as acute allergic/hypersensitivity reactions, CRS/IRR, and potential ICANS are provided in Section 8.3.1, Section 8.3.2, and Section 8.3.3. Guidance for the anticipated B-cell depletion and associated risk of infection, and for the prophylaxis for TLS are provided in Section 8.3.4 and Section 8.3.5. Upon occurrence of a toxicity, the investigator, with input from the sponsor, as needed, will assess the etiology of the toxicity.

8.3.1. Acute Allergic/Hypersensitivity Reactions

Emergency equipment and medication for the treatment of infusion reactions must be available for immediate use. All infusion reactions must be reported as AEs (as defined in Section 10.1.2) and graded using the grading scales as instructed in Section 10.2.5.

8.3.1.1. Interruption of the Intravenous Infusion

The infusion should be interrupted if any of the following AEs are observed:

- Sustained/ severe cough
- Rigors/chills
- Rash, pruritus (itching)
- Urticaria (hives, welts, wheals)
- Diaphoresis (sweating)
- Hypotension
- Dyspnea (shortness of breath)
- Vomiting
- Flushing

The reaction(s) should be treated symptomatically, and the infusion may be restarted at 50% of the original rate.

If investigators feel there is a medical need for treatment or discontinuation of the infusion other than described above, they should use clinical judgment to provide the appropriate response according to typical clinical practice.

VV-RIM-00312509-1.0 Approved - 18 Aug 2023 GMT-5:00

8.3.1.2. Termination of the Intravenous Infusion

The infusion of linvoseltamab (and potentially the comparator drugs) should be terminated and NOT restarted if any of the following AEs occur:

- Anaphylaxis*
- Laryngeal/pharyngeal edema
- Severe bronchospasm
- Chest pain
- Seizure
- Severe hypotension
- Other neurological symptoms (confusion, loss of consciousness, paresthesia, paralysis, etc)
- Any other symptom or sign that, in the opinion of the investigator, warrants termination of the IV infusion

*Consider anaphylaxis if the following is observed (Sampson 2006): acute onset of an illness (minutes to several hours) with involvement of the skin, mucosal tissue, or both (eg, generalized hives, pruritus or flushing, swollen lips-tongue-uvula) AND AT LEAST ONE OF THE FOLLOWING

- Respiratory compromise (eg, dyspnea, wheeze-bronchospasm, stridor, reduced peak expiratory flow, hypoxemia)
- Reduced BP or associated symptoms of end-organ dysfunction (eg, hypotonia [collapse], syncope, incontinence)

8.3.2. Grading and Management of Infusion-Related Reaction and Cytokine Release Syndrome

8.3.2.1. IRR and CRS: General Considerations

Infusion-related reactions (IRRs) are common adverse drug reactions observed with mAbs. An IRR is associated with typical signs and symptoms including, but not limited to, flushing, tachycardia, hypotension, dyspnea, bronchospasm, back pain, fever, urticaria, edema, nausea, and rashes. Symptoms are temporally related to drug administration and may range from symptomatic discomfort to fatal events. Several reported terms are used to identify IRRs and while there is considerable overlapping symptomatology, the etiology of each is very different. Such terms include, anaphylaxis, anaphylactoid reactions, CRS, and complement activation-related pseudoallergy (CARPA). The key reason for trying to identify the etiology of the symptoms and the actual diagnosis is to ensure identification of reactions that are likely to recur or even worsen with subsequent exposure the medication (eg, anaphylaxis), as opposed to those that are likely to improve with repeated exposure (anaphylactoid reactions and CRS) (Doessegger, 2015). Events characterized as IRRs have been observed with both linvoseltamab (see Sections 5.4 and Section 6.1 of the latest linvoseltamab Investigator's Brochure) and elotuzumab (see Section 3.2.1.2 of this protocol and Empliciti prescribing information (Empliciti (elotuzumab) [Package Insert])).

VV-RIM-00312509-1.0 Approved - 18 Aug 2023 GMT-5:00

Infusion-related reactions are graded according to the National Cancer Institute-Common Terminology Criteria for Adverse Events (NCI-CTCAE v5.0).

Cytokine release syndrome (CRS) is a symptom complex caused by the rapid release of proinflammatory cytokines from target immune cells. Although CRS is not directly related to immunogenicity, the clinical presentation overlaps with anaphylaxis and other immunologically related adverse reactions (Doessegger, 2015). Clinically, CRS is a syndrome that includes symptoms of fever, hypotension, tachycardia, hypoxia, and other symptoms. Neurologic symptoms temporally associated with CRS were previously included as part of CRS but are now considered a separate entity (ICANS; see Section 8.3.3). CRS has been observed in patients treated with linvoseltamab. See Section 1.4 in this protocol and the latest linvoseltamab Investigator Brochure for more information.

IRR and CRS events will be documented on standard AE pages and on a dedicated IRR/CRS eCRF page to record additional details.

8.3.2.2. Study Definitions of IRR and CRS

Linvoseltamab arm: For the purposes of this study, investigators should consider an event that occurs following linvoseltamab infusion with the appropriate constellation of symptoms to be IRR if it occurs less than 6 hours from the start of the linvoseltamab infusion, or within 2 hours after completion of the infusion (whichever is later). Cytokine release syndrome is defined as such an event that occurs after the IRR period. Although a cutoff has been defined for IRR/CRS reporting purposes, it is possible that CRS may occur prior to this cutoff and IRR may occur after the cutoff. Therefore, for each IRR, CRS should be considered, and the diagnosis, management, and reporting should be based upon the investigator's clinical judgment. If the symptoms and/or laboratory evaluation of an event suggest CRS occurred during the IRR period, the participant should be treated for CRS and the event should be reported as CRS. Note: the 6-hour cutoff for the presentation of IRR symptoms is not a validated criterion but is being used as a guide for investigators.

EPd arm: Elotuzumab does not cause CRS. Therefore, all events that occur within 24 hours following elotuzumab infusion with the appropriate constellation of symptoms should be considered IRR.

8.3.2.3. Management of IRR and CRS

Emergency equipment and medication for the treatment of these potential adverse effects (eg, anticytokine therapy [such as tocilizumab], antihistamines, bronchodilators, IV saline, corticosteroids, acetaminophen, and/or epinephrine) must be available for immediate use. Participants who develop symptoms consistent with severe CRS, including but not limited to persistent fevers, neurologic disorders (including mental status changes, obtundation, and seizures), or clinical signs of toxicity should be considered for pharmacologic intervention with anti-cytokine therapy (eg, tocilizumab) and/or corticosteroids (Davila, 2014) (Grupp, 2013). In the event of IRR, management guidelines are provided in Table 10 for linvoseltamab, and in Section 8.2.2.1 for elotuzumab. In the event of CRS, toxicity grading (according to criteria adapted from (Lee, 2019) is provided in Table 9 and management guidelines in Table 10. Additional guidance regarding the use of anti-cytokine therapy (eg, tocilizumab) and corticosteroids is provided in Table 11. Site personnel must complete the dedicated IRR/CRS case report form.

VV-RIM-00312509-1.0 Approved - 18 Aug 2023 GMT-5:00

Table 9: Cytokine Release Syndrome Toxicity Grading

CRS Parameter	Grade 1	Grade 2	Grade 3	Grade 4
Fever[1]	Temperature ≥38˚C	Temperature ≥38˚C	Temperature ≥38˚C	Temperature ≥38˚C
With				
Hypotension	None	Not requiring vasopressors	Requiring vasopressors with or without vasopressin	Requiring multiple vasopressors (excluding vasopressin)
And/or[2]				
Hypoxia	None	Requiring low-flow nasal cannula[3] or blow-by	Requiring high-flow nasal cannula[3], facemask, nonrebreather mask, or Venturi mask or blow-by	Requiring positive pressure (eg, CPAP, BiPAP, intubation and mechanical ventilation)

*Adapted from American Society for Transplantation and Cellular Therapy (ASTCT) Cytokine Release Syndrome Consensus Grading (Lee, 2019).

BiPAP=bilevel positive airway pressure, CPAP=continuous positive airway pressure, CRS=Cytokine Release Syndrome

Organ toxicities associated with CRS may be graded according to CTCAE v5.0 but they do not influence CRS grading.

[1] Fever is defined as temperature ≥38°C not attributable to any other cause. In participants who have CRS and then receive antipyretic or anti-cytokine therapy such as tocilizumab or steroids, fever is no longer required to grade subsequent CRS severity. In this case, CRS grading is driven by hypotension and/or hypoxia.

[2] CRS grade is determined by the more severe event: hypotension or hypoxia not attributable to any other cause. For example, a participant with temperature of 39.5°C, hypotension requiring 1 vasopressor, and hypoxia requiring low-flow nasal cannula is classified as grade 3 CRS.

[3] Low-flow nasal cannula is defined as oxygen delivered at ≤6 L/minute. Low flow also includes blow-by oxygen delivery, sometimes used in pediatrics. High-flow nasal cannula is defined as oxygen delivered at >6 L/minute.

VV-RIM-00312509-1.0 Approved - 18 Aug 2023 GMT-5:00

Table 10: Management Guidance and Linvoseltamab Dosing in Setting of Cytokine-Mediated Toxicities & Infusion Related Reactions

Event	Grade	Action with linvoseltamab	Management Guide	Rechallenge
Acute IRR*	2	Temporarily pause study drug*	Treat symptomatically: Supportive care, antipyretics (eg, acetaminophen/paracetamol), meperidine	No dose modification required May resume when clinical symptoms are grade 1 or baseline Consider an infusion rate of ≤50% of previous rate (up to 6 hours total). If the rate is reduced and tolerated, for subsequent infusions the infusion rate may be increased to 100%
	3	Temporarily pause study drug	Treat symptomatically: Supportive care, antipyretics (eg, acetaminophen/paracetamol), meperidine. Consider corticosteroids. Vigilant supportive care is needed. The investigator should consider a possible CRS diagnosis and need for applicable CRS treatment.	May resume treatment when clinical symptoms are grade 1 or baseline: Reduce dose by 50% from the previous dose with infusion rate of ≤50% of previous rate (up to 6 hours total). If the reduced dose is tolerated with no signs/symptoms of grade ≥3 IRR, the participant may return to the previous dose with ≤50% rate of infusion. The infusion rate may be increased to 100% if tolerable and if tolerated, then proceed to the full dose. If grade 3 IRR recurs with subsequent doses, permanently discontinue treatment Continue dosing if no recurrence of toxicity
	4	Permanently discontinue study drug	Treat symptomatically: Supportive care, antipyretics (eg, acetaminophen/paracetamol) and meperidine. Consider also corticosteroids. Vigilant supportive care is needed. The investigator should consider a possible CRS diagnosis and need for applicable CRS treatment.	Not applicable

VV-RIM-00312509-1.0 Approved - 18 Aug 2023 GMT-5:00

Event	Grade	Action with linvoseltamab	Management Guide	Rechallenge
CRS*	1	Temporarily pause study drug	Vigilant supportive care (ie, assess for infection; treat febrile neutropenia if present, monitor fluid balance, antipyretics/ analgesics as needed); monitor cardiac and other organ functions closely; symptomatic management of organ toxicities Initiate corticosteroids for participants with organ toxicities (listed in Table 11) excluding neurotoxicity. Consider corticosteroids and/or anticytokine therapy (eg, tocilizumab) and/or as per institutional/consensus guidelines. Tocilizuamb may be used for participants with comorbidities, older age >65 years, or symptoms refractory to supportive measures (Reagan, 2021)	No dose modification required. May resume when clinical symptoms are grade 1 or baseline Consider decreasing the infusion rate to ≤50% of previous rate (up to 6 hours total). If the rate is reduced and tolerated, for subsequent infusions the infusion rate may be increased to 100%.
	2	Temporarily pause study drug	Vigilant supportive care as per grade 1: Administer anticytokine therapy (eg, tocilizumab) as per institutional/consensus guidelines (Reagan, 2021) Initiate corticosteroids for participants with organ toxicities (listed in Table 11 excluding neurotoxicity	No dose modification required. During the step-up dosing period, dose modification (eg, repeating or delaying a step-up dose) is allowed. May resume when clinical symptoms are grade 1 or baseline Consider hospitalization and consider decreasing the infusion rate to ≤50% of previous rate (up to 6 hours total). If the rate is reduced and tolerated, for subsequent infusions the infusion rate may be increased to 100%

VV-RIM-00312509-1.0 Approved - 18 Aug 2023 GMT-5:00

Event	Grade	Action with linvoseltamab	Management Guide	Rechallenge
	3	Temporarily pause study drug. Permanently discontinue for the first occurrence of grade 3 CRS lasting >48 hours or recurrent grade 3 CRS of any duration	Vigilant supportive care as per grade 2: Administer anticytokine therapy (eg, tocilizumab). and corticosteroids	May resume when clinical symptoms are grade 1 or baseline: Hospitalize the participant and reduce dose by 50% from the previous dose with infusion rate of ≤50% of previous rate (up to 6 hours total). Consider prophylactic anticytokine therapy (eg, tocilizumab). If the reduced dose is tolerated with no signs/symptoms of grade ≥3 CRS, the participant may return to the previous dose with ≤50% rate of infusion. The infusion rate may be increased to 100% if tolerable and if tolerated, then proceed to the full dose. If grade 3 CRS lasts longer than 48 hours or recurs with subsequent doses, permanently discontinue treatment.
	4	Permanently discontinue study drug	Vigilant supportive care as per grade 3	Not applicable
Transaminase elevations (Grade ≥3) associated with CRS*	≥3	Temporarily pause study drug	Supportive care as needed, monitor closely. Initiate corticosteroids immediately (see Table 11) Study drug will be temporarily withheld, and subsequent study drug treatment administrations will not resume until laboratory parameters are trending toward normal	Resume linvoseltamab only when symptoms of CRS are grade ≤1 or baseline. No change to dose is required if not associated with clinical symptoms and is trending towards normal within 7 days. Otherwise, reduce dose by 50%. For the adjustment of infusion rate, see guidance for the management of each grade of CRS above.

CNS=Central nervous system; CRS=Cytokine release syndrome; IRR=Infusion-related reaction

If subsequent administration is tolerated, participants who received a reduced dose may have their dose increased at subsequent administration but no higher than the full dose, based on the clinical judgment of the investigator in consultation with the sponsor.

* CRS will be graded according to criteria specified in (Lee, 2019) (Table 9). All other events will be graded according to criteria specified in NCI-CTCAE v5.0. Consistent with these criteria, Grade 1 infusion-related reactions require no infusion interruption or intervention.

VV-RIM-00312509-1.0 Approved - 18 Aug 2023 GMT-5:00

Table 11: Additional Guidelines for Administration of Anticytokine Therapy (eg, Tocilizumab) and Corticosteroids in Setting of Cytokine Release Syndrome

Event	Dose
• Left ventricular ejection fraction <40% by echocardiogram • Creatinine >2.5-fold higher than the most recent level prior to linvoseltamab Activated PTT >2x ULN • Clinically significant bleeding • Creatine kinase >5x ULN for longer than 2 days • Alanine/Aspartate aminotransferase increase (ALT/AST) >5.0x ULN	For example, 4 to 8 mg/kg tocilizumab infused over 1 hour, dose not to exceed 800 mg 20 mg dexamethasone per day in divided doses

FiO_2=fractional inspired O_2 concentration; PTT=partial thromboplastin time; SBP=systolic blood pressure
Guidelines adapted from (Brudno, 2016). Note: This is not an exhaustive list.

8.3.3. Central Nervous System Toxicity/ICANS Events

8.3.3.1. Study Definition of ICANS

ICANS is a stereotypic disorder characterized by a pathologic process involving the central nervous system following any immune therapy that results in the activation or engagement of endogenous or infused T cells and/or other immune effector cells. Symptoms or signs can be progressive and may include aphasia, altered level of consciousness, impairment of cognitive skills, motor weakness, seizures, and cerebral edema. ICANS may have features that overlap with other encephalopathies although some symptoms such as expressive aphasia maybe more specific for ICANS (Lee, 2019).

Other neurological symptoms and/or signs may occur and possibly be attributable to immune effector cell-engaging therapies. As isolated signs/ symptoms, these are not considered ICANS, and are considered under other neurologic events. For example, headache or tremor with no decrease in ICE score or no decreased level of consciousness, disorientation, or other stereotypic symptoms or signs of ICANS, would not be considered ICANS.

Any neurologic symptoms including symptoms seen in cases of ICANS may also be observed in association with other pathological processes, including the examples listed below. Neurologic symptoms considered wholly explained by other processes like these would not be considered ICANS.

- Hepatic failure, severe hypertension, infection, electrolyte or other laboratory abnormalities
- Adverse reactions to immunosuppressive therapies, cytotoxic drug therapies, or other concomitant medications
- Underlying disease processes, eg, a pre-existing seizure disorder

The CARTOX-10-based grading tool for ICANS, termed the ICE score, is described in Section 9.2.3.4 and Appendix 3. The ICE score should be used to grade all cases of ICANS in this trial.

VV-RIM-00312509-1.0 Approved - 18 Aug 2023 GMT-5:00

8.3.3.2. Management of ICANS

Management of ICANS events is described in Table 12. Participants should undergo appropriate evaluation to determine the etiology of the CNS symptoms (see Section 9.2.3.4 and Appendix 3). Site personnel must complete the dedicated ICANS case report form.

Table 12: Management Guidance and Linvoseltamab Dosing in Setting of ICANS

Event	Grade	Action with linvoseltamab	Management Guide	Rechallenge
ICANS	2	Temporarily pause study drug	Treat symptomatically as per local guidelines Suspend study drug at least temporarily until symptoms resolve to grade 1 or baseline. Participants should undergo appropriate evaluation to determine the etiology of the symptoms.	Any decision to restart treatment upon resolution of symptoms must be discussed and agreed upon by the investigator and the sponsor.
	≥3	Pause study drug. Permanently discontinue for grade 4 or recurrent grade 3 ICANS.	Treat symptomatically as per local guidelines. Participants should undergo appropriate evaluation to determine the etiology of the symptoms.	Discontinue if attributed to the study drug with the following exception: Participants who experience grade 3 signs and symptoms of ICANS that is transient and resolves to grade 1 or baseline within 24 hours may continue the study drug regimen. Any decision to restart treatment after resolution of symptoms of a grade 3 event must be discussed and agreed upon by the investigator and the medical monitor. Participants who experience grade 4 or recurrent grade 3 symptoms consistent with ICANS (eg, seizure, somnolence) at any time on treatment will be required to discontinue study drug regimen permanently.
Recurrent seizure	Any grade	Permanently discontinue study drug	Treat symptomatically as per local guidelines	Not applicable

VV-RIM-00312509-1.0 Approved - 18 Aug 2023 GMT-5:00

8.3.4. B-Cell Depletion and Risk of Infection

Treatment with linvoseltamab may result in pronounced and prolonged B-cell depletion. The expected primary pharmacology of B-cell depletion may increase the risk of infections.

In addition to B-cell depletion, myeloma patients are at risk of infection due to immunodeficiency (B-cell dysfunction and hypogammaglobulinemia that are associated with the underlying malignancy), cumulative immunosuppression from previous lines of therapy, neutropenia, advanced age, renal impairment, and other organ dysfunctions. Standard myeloma guidelines recommend increased vigilance and frequent reassessment of each individual patient for risk of infection as well as early suspicion of infection.

Participants with known active bacterial, viral, fungal, mycobacterial, or other infection, or any major episode of infection requiring hospitalization or treatment with IV anti-infectives within 2 weeks prior to first administration of linvoseltamab, are excluded from the trial. Infections of grade 3 severity and above will be reported as AESIs (Section 10.2.3).

Recommendations to decrease the risk of infections include:

- Vaccination against COVID-19, Herpes zoster, seasonal influenza and pneumococcus is strongly recommended for all multiple myeloma participants. Participants should be up to date on COVID booster vaccination according to local guidance.
- Antiviral prophylaxis with acyclovir or equivalent medication (per institutional standards) is recommended for all participants throughout the study duration to prevent herpes simplex virus and herpes zoster virus reactivation.
- Prophylaxis with antibacterial (eg, levofloxacin) and/or antifungal (eg, fluconazole) medication may be considered for high-risk participants (eg, persistent grade 4 neutropenia) according to local institutional guidelines.
- Participants with severe immune dysfunction may warrant prophylaxis for PJP or CMV in accordance with local institutional guidelines although PJP prophylaxis is required for all participants randomized to linvoseltamab.
- Immunoglobulin replacement with IVIG can be considered for participants with IgG concentrations less than 400 mg/dL.
- CMV, HBV, HIV, and HCV laboratory testing at screening, certain timepoints during the study (Table 13) and as clinically indicated. If CMV DNA levels are detected at any time, monitor and consider antiviral treatment for CMV as deemed appropriate by the investigator and in accordance with local institutional guidance.

More comprehensive guidance on infection prevention is available from the IDSA, NCCN, and IMWG (Raje, 2022).

8.3.5. Tumor Lysis Syndrome

In general, prophylaxis and management of TLS will be according to the investigator's clinical judgment and institutional guidelines if applicable.

Tumor lysis syndrome in patients with RRMM is uncommon as compared to patients with lymphoid malignancies and prophylaxis is not mandatory. Tumor lysis syndrome has been

VV-RIM-00312509-1.0 Approved - 18 Aug 2023 GMT-5:00

reported in patients treated with pomalidomide (Pomalyst (pomalidomide) [Package Insert]). Investigators have reported a few AEs considered to be TLS following treatment with linvoseltamab (see the latest IB). However, tumor lysis prophylaxis, such as with fluid hydration and allopurinol, may be considered on an individual basis per institutional guidelines for patients who present with either an especially high disease burden and/or disease that is more highly proliferative based on clinical (ie, a high uric acid and/or LDH), biological (ie, a high Ki-67), or molecular criteria (ie, a c-myc translocation).

8.4. Method of Treatment Assignment

Approximately 300 participants will be randomized in a 1:1 ratio to receive either linvoseltamab monotherapy or EPd arm according to a central randomization scheme provided by an interactive response technology (IRT) system to the designated study pharmacist (or qualified designee). Randomization will be stratified according to:

- the study participant's prior exposure to CD38 antibody and time since last CD38 antibody as follows: CD38 antibody ≤4 months from randomization vs CD38 antibody >4 months from randomization vs no prior CD38 antibody
- a composite of ISS Stage and EMPs as follows: participants with either International Staging System (ISS) Stage III and/or the presence of EMPs (EMP+) vs ISS Stage I/II/missing AND no EMPs (EMP-).

Stratification factors are described in Table 3.

Randomization should occur <3 days prior to the planned C1D1.

8.5. Blinding/Masking

This is an open-label study.

8.6. Treatment Logistics and Accountability

8.6.1. Packaging, Labeling, and Storage

Open-label linvoseltamab and other cancer treatments will display the product lot number on the label.

Linvoseltamab and diluent (if necessary) will be provided as sterile solutions in glass vials. Elotuzumab, pomalidomide, and dexamethasone treatments will be packaged by the manufacturer and labeled or over labeled by the sponsor for this clinical trial when required by regulations.

The drugs for the study regimens will be stored according to manufacturer instructions and will be listed on the package label. Storage instructions will be provided in the pharmacy manual. The labeled storage conditions always supersede all other storage condition information

8.6.2. Supply and Disposition of Treatments

Linvoseltamab will be shipped at the labeled temperature to the investigator or designee at regular intervals or as needed during the study.

VV-RIM-00312509-1.0 Approved - 18 Aug 2023 GMT-5:00

Elotuzumab, pomalidomide, and dexamethasone will be shipped at the temperature recommended by each manufacturer.

At specified time points during the study (eg, interim site monitoring visits), at the site close-out visit, and following drug reconciliation and documentation by the site monitor, all opened and unopened study drugs will be destroyed / returned to the sponsor or designee.

8.6.3. Treatment Accountability

All drug accountability records must be kept current.

The investigator must be able to account for all opened and unopened study drug. These records should contain the dates, quantity, and study medication

- dispensed to each participant
- returned from each participant (if applicable), and
- disposed of at the site or returned to the sponsor or designee.

All accountability records must be made available for inspection by the sponsor and regulatory agency inspectors; photocopies must be provided to the sponsor at the conclusion of the study.

8.6.4. Treatment Compliance

All drug compliance records must be kept current and made available for inspection by the sponsor and regulatory agency inspectors.

Participants will complete a dose administration diary to document compliance with self-administration of oral study drug(s), as applicable.

8.7. Concomitant Medications and Procedures

- If a participant intends to receive a COVID-19 vaccine (initial series or booster), before the start of study drug administration, day 1 of the study and the events associated with day 1, should not occur until at least 1 week after any COVID-19 vaccination dosing. Other vaccines without the potential to replicate should be planned similarly.
- During the treatment period, it is recommended to delay COVID-19 vaccination, either as an initial series or as a booster dose, until participants are receiving and tolerating a steady dose of study drug. Other vaccines without the potential to replicate should be planned similarly.
  - COVID-19 vaccination, either as an initial series or as a booster dose, received during the study, will be treated as a concomitant medication. As noted, administration of a COVID-19 vaccination should be separated from the time of administration of the investigational product (at least 72 hours, ideally by at least one week) in order to avoid confounding the effects (eg, adverse effects) of the vaccine/booster with the effects of study drug.

Any treatment administered from the time consent is obtained until 90 days following the last dose of study drug regimen or start of non-protocol anti-MM therapy, whichever occurs first, will be

VV-RIM-00312509-1.0 Approved - 18 Aug 2023 GMT-5:00

considered concomitant medication. This includes medications that were started before the study and are ongoing during the study.

All concomitant medications, including the generic name, dose, dose unit, frequency, start/stop date must be recorded in the study case report form (CRF). Any treatments that are started subsequent to the 90-day follow-up visit should not be recorded unless the medication is started to treat AEs deemed related to study drug regimen.

8.7.1. Prohibited Medications and Procedures

During the period defined in Section 8.7, unless otherwise specified in Section 8.7.2, a participant may not receive any of the following:

- Corticosteroid: Ongoing systemic treatment of more than 10 mg per day of prednisone or equivalent, except as specified in the protocol or for treatment of an AE
- Live or live attenuated vaccine(s) with replicating potential.
- During the treatment period, it is recommended to delay COVID-19 vaccination or other vaccines without the potential to replicate until participants are receiving and tolerating a steady dose of study drug.
- During the treatment period, any non-study treatment of the malignancy except as specified in Section 8.7.2. For additional information, refer to the current approved prescribing information of all approved cancer regimens.

8.7.2. Permitted Medications and Procedures

The following medications and procedures will be permitted, under the following conditions:

- Any medication required to treat an AE, including systemic corticosteroid therapy
- Corticosteroid therapy for participants requiring physiologic replacement therapy, or requiring a brief course for prophylaxis (eg, contrast dye allergy) or for treatment of nonautoimmune conditions (eg, delayed-type hypersensitivity reaction caused by contact allergen)
- Granulocyte-colony stimulating factor (G-CSF), or platelet or red blood cell (RBC) transfusions may be permitted for participants who require hematopoietic replacement.
- Cytochrome P450 (CYP450) substrates.
  - Linvoseltamab arm: Transient release of cytokines has been observed predominantly during initial weeks of linvoseltamab dosing, and cytokines may suppress CYP450 enzymes (Morgan, 2001). For participants who are receiving concomitant CYP450 substrates, particularly those with a narrow therapeutic index, monitoring of the effect (eg, warfarin) or drug concentration (eg, cyclosporine or theophylline) is recommended, especially during the initial weeks of therapy.
  - EPd arm: co-administration of fluvoxamine, a strong CYP1A2 inhibitor, increased Cmax and AUC of pomalidomide. Avoid co-administration of strong CYP1A2 inhibitors (eg, ciprofloxacin, enoxacin, and fluvoxamine). If co-administration is

VV-RIM-00312509-1.0 Approved - 18 Aug 2023 GMT-5:00

unavoidable, reduce the pomalidomide dose (see Section 8.2.2 and pomalidomide prescribing information).

- Any other medication which is considered necessary for the participant's welfare, and which is not expected to interfere with the evaluation of the study regimen, may be given according to the physician's clinical judgment.
- Local therapies including palliative external beam radiation is permitted to treat symptomatic myeloma lesions after discussion with the sponsor.
- Antithrombotic prophylaxis is recommended for all EPd arm participants given the association of pomalidomide with an increased incidence of thromboembolic events. The regimen of thromboprophylaxis should be based on assessment of the participant's underlying risk factors.
- Erythropoiesis-stimulating agents should be used with caution when administered concurrently with immunomodulatory drugs like pomalidomide given the added risk of thromboembolic events.
- Options for contraception are listed in Exclusion Criterion #27. Additional guidance regarding contraception:
  - Because of the increased risk of venous thromboembolism in participants with multiple myeloma taking pomalidomide and dexamethasone, combined oral contraceptive pills are not recommended. If a participant is currently using combined oral contraception the participant should switch to 1 of the effective methods listed above. The risk of venous thromboembolism continues for 4 to 6 weeks after discontinuing combined oral contraception. The efficacy of contraceptive steroids may be reduced during cotreatment with dexamethasone.
  - Implants and levonorgestrel-releasing intrauterine systems are associated with an increased risk of infection at the time of insertion and irregular vaginal bleeding. Prophylactic antibiotics should be considered particularly in participants with neutropenia.
  - Insertion of copper-releasing intrauterine devices is not recommended due to the potential risks of infection at the time of insertion and menstrual blood loss which may compromise participant with severe neutropenia or severe thrombocytopenia.

VV-RIM-00312509-1.0 Approved - 18 Aug 2023 GMT-5:00

9. STUDY SCHEDULE OF EVENTS AND PROCEDURES

9.1. Schedule of Events

In light of the public health emergency related to COVID-19, the continuity of clinical study conduct and oversight may require implementation of temporary or alternative mechanisms. Examples of such mechanisms may include, but are not limited to, any of the following: phone contact, virtual visits, telemedicine visits, online meetings, non-invasive remote monitoring devices, use of local clinic or laboratory locations, and home visits by skilled staff. Additionally, no waivers to deviate from protocol enrollment criteria due to COVID-19 will be granted. All temporary mechanisms utilized, and deviations from planned study procedures are to be documented as being related to COVID-19 and will remain in effect only for the duration of the public health emergency.

Study assessments and procedures are presented by study period and visit in Table 13.

VV-RIM-00312509-1.0 Approved - 18 Aug 2023 GMT-5:00

Table 13: Schedule of Events

	SCREENING	TREATMENT PERIOD												
Cycle (28 days)		**Cycle 1 & 2**				**Cycle 3**				**Cycle 4 to Progression**				**Comments**
Visit Day (D)	**D-28 to D-1**	**D1**	**D8**	**D15**	**D22**	**D1**	**D8**	**D15**	**D22**	**D1**	**D8**	**D15**	**D22**	
Visit Window (D)	±0	±0	±2	±2	±2	±2	±2	±2	±2	±2	±2	±2	±2	
Study Procedure														
Screening														Lab abnormalities or other clinical parameters that are clearly reversible, the screening window may be extended an additional 7 days to allow for correction and retesting of the specific parameter(s) that do not meet entry criteria.
Main Informed Consent	X													
Informed Consent for Optional FBR sub-study	X													Informed consent for optional FBR sub-study will be required for participants who chose to participate in the sub-study
Inclusion/Exclusion Criteria	X													May re-screen once, as described more in protocol as per Section 9.2.1.
Medical/Oncology History	X													
Demographics	X													
Complete PE	X													
Height	X													
β2 Microglobulin (local laboratory)	X													
Brain MRI	X													Only applicable for participants with history or clinical suspicion of myeloma involvement in the CNS. Does not need to be obtained at screening if performed within 6 weeks (42 days) prior to randomization
Echo or MUGA	X													Does not need to be collected at screening if performed within 6

VV-RIM-00312509-1.0 Approved - 18 Aug 2023 GMT-5:00

	SCREENING	TREATMENT PERIOD												
Cycle (28 days)		**Cycle 1 & 2**				**Cycle 3**				**Cycle 4 to Progression**				**Comments**
Visit Day (D)	**D-28 to D-1**	**D1**	**D8**	**D15**	**D22**	**D1**	**D8**	**D15**	**D22**	**D1**	**D8**	**D15**	**D22**	
Visit Window (D)	±0	±0	±2	±2	±2	±2	±2	±2	±2	±2	±2	±2	±2	
Study Procedure														
														weeks (42 days) prior to randomization
HIV, HBV, HCV Testing (local laboratory)	X					X				X				On-study samples will be collected only for patients with controlled HBV infections (per definition in exclusion criterion #18 in Section 7.2.2). Samples will be collected for HBV DNA monitoring every 2 cycles on day 1 (C3, C5 etc; approximately Q8W).
CMV PCR testing	X					X				C5 and C7				Samples will be collected for CMV monitoring during screening, cycles 3, 5, and 7, and as clinically indicated. Please refer to Section 8.3.4. If local testing is not available, testing can be performed by a central laboratory.
Randomization	X													Within 3 days of C1D1
Hospitalization/Inpatient Monitoring														
Monitored setting with subsequent inpatient observation		C1 only	C1 only	C1 only										At least 24 hours from the end of linvoseltamab study drug infusion only. See Section 8.1.1.1 for detailed information.
Treatment-related Hospitalization (planned + unplanned due to AEs)	Hospitalization data (including general ward, ICU, ER visits) will be collected continuously as they occur													
Treatment:														
Arm 1: Linvoseltamab		X	X	X	X	X	X	X	X	X		X		Dosing of linvoseltamab must be at least 5 days apart. *For participants who have received at least 6 cycles of treatment and achieved response of VGPR or

VV-RIM-00312509-1.0 Approved - 18 Aug 2023 GMT-5:00

		SCREENING	TREATMENT PERIOD												
Cycle (28 days)			**Cycle 1 & 2**				**Cycle 3**				**Cycle 4 to Progression**				**Comments**
Visit Day (D)		**D-28 to D-1**	**D1**	**D8**	**D15**	**D22**	**D1**	**D8**	**D15**	**D22**	**D1**	**D8**	**D15**	**D22**	
Visit Window (D)		±0	±0	±2	±2	±2	±2	±2	±2	±2	±2	±2	±2	±2	
Study Procedure															
															better, the D15 dose will be omitted, and the dosing frequency will be reduced to Q4W. See Section 8.1.1 and Figure 2
Arm 2	Elotuzumab		X	X	X	X	X				X				Please refer to Section 8.1.2 and Table 5 for more details about doses and premedication.
	Pomalidomide		Days 1 – 21				Days 1-21				Days 1-21				
	Dexamethasone		Days 1, 8, 15, and 22				Days 1, 8, 15, and 22				Days 1, 8, 15, and 22				Please refer to Table 6 and Figure 3.
Efficacy/Disease Assessment (Central for Biological Samples):															
Overall Response Assessment			X (C1D1 then Q4 weeks regardless of study drug administration)												The disease assessments will follow the calendar schedule (every 4 weeks) starting C1D1, regardless of study drug administration. A second response assessment will be required to confirm all responses and disease progression with samples submitted for central laboratory testing (excluding biopsies and imaging). A confirmatory laboratory assessment done locally and entered into the EDC will be accepted.
SPEP		X	X (C1D1 then Q4 weeks regardless of study drug administration)												Samples will be taken predose.
24 hr urine for UPEP		X	X (C1D1 then Q4 weeks regardless of study drug administration)												Samples will be taken predose. If collected during screening within 14 days of randomization, repeat collection is not required at C1D1.
Serum and Urine Immunofixation		X	X (C1D1 then Q4 weeks regardless of study drug administration)												Samples will be taken predose.

VV-RIM-00312509-1.0 Approved - 18 Aug 2023 GMT-5:00

	SCREENING	TREATMENT PERIOD												
Cycle (28 days)		**Cycle 1 & 2**				**Cycle 3**				**Cycle 4 to Progression**				**Comments**
Visit Day (D)	**D-28 to D-1**	**D1**	**D8**	**D15**	**D22**	**D1**	**D8**	**D15**	**D22**	**D1**	**D8**	**D15**	**D22**	
Visit Window (D)	±0	±0	±2	±2	±2	±2	±2	±2	±2	±2	±2	±2	±2	
Study Procedure														
Serum FLC	X	X (C1D1 then Q4 weeks regardless of study drug administration)												Samples will be taken predose. May be tested at additional time points as an exploratory biomarker measure using exploratory serum samples
Immunoglobulin Quantification (IgA, IgM, IgG, IgD, IgE)	X	X (C1D1 then Q4 weeks regardless of study drug administration)												Samples will be taken predose.
Serum for DIRA assay		X (C1)								X (upon suspected CR if DIRA positive at screening)				Samples will be taken predose. A daratumumab interference reflex assay (DIRA) will be performed to distinguish the participant monoclonal protein from prior daratumumab in serum immunofixation (SIFE).
Bone Marrow Aspirate and/or Biopsy including MRD	X	X. A repeat bone marrow aspirate sample should be collected in patients with prolonged VGPR, CR or sCR for initial MRD testing and then 12 months and annually to assess sustained MRD. For participants with an initial MRD positive test, an optional repeat bone marrow aspirate can be collected within 6 months to reassess MRD status in participants remaining in VGPR or better.												Biopsy does not need to be collected at screening if performed within 6 weeks (42 days) prior to randomization The screening bone marrow aspirate sample is required and will be used to assess chromosomal abnormalities, flow cytometry, MRD (clone identification) and other exploratory analyses at a central lab. See Section 9.2.2.5 and Section 9.2.2.6.
Optional plasmacytoma biopsy	X													Sample must be shipped to a central lab. See Section 9.2.2.4.
Whole body baseline imaging	X													Baseline whole body imaging is mandatory for all patients However, it does not need to be obtained at screening if performed within 28 days prior to randomization and it is of acceptable quality as determined by central review QC.

VV-RIM-00312509-1.0 Approved - 18 Aug 2023 GMT-5:00

	SCREENING	TREATMENT PERIOD												
Cycle (28 days)		**Cycle 1 & 2**				**Cycle 3**				**Cycle 4 to Progression**				**Comments**
Visit Day (D)	**D-28 to D-1**	**D1**	**D8**	**D15**	**D22**	**D1**	**D8**	**D15**	**D22**	**D1**	**D8**	**D15**	**D22**	
Visit Window (D)	±0	±0	±2	±2	±2	±2	±2	±2	±2	±2	±2	±2	±2	
Study Procedure														
														See Section 9.2.2.2.
Plasmacytoma imaging and Exams (FDG PET-CT, low dose CT or MRI)	X	Every 12 weeks ±7 days (see Table 16 for details)												For patients with plasmacytomas, on-treatment exams will begin C13D1 and follow the calendar schedule relative to C1D1, regardless of study drug administration, or as clinically indicated. For patients without plasmacytomas, on treatment exams should be performed as clinically indicated. See Section 9.2.2.3.
Safety:														
Vital Signs	X	X	X	X	X	X	X*	X*	X*	X		X*		Details provided in Section 9.2.3.2. *Omit if neither linvoseltamab nor elotuzumab administered.
Weight	X	X				X				X				Assessments will be performed predose.
Limited PE		X		X		X		X*		X		X*		Assessments will be performed predose. Complete PE may be completed, if clinically indicated. *Omit if neither linvoseltamab nor elotuzumab administered.
PT (INR) and aPTT/PTT	X													
ECOG Status	X	X				X				X				Assessments will be performed predose.
PPP/REMS verification	X	X				X				X				EPd arm only, see Section 9.2.3.6
Electrocardiogram	X	X (as clinically indicated)												

VV-RIM-00312509-1.0 Approved - 18 Aug 2023 GMT-5:00

	SCREENING	TREATMENT PERIOD												
Cycle (28 days)		**Cycle 1 & 2**				**Cycle 3**				**Cycle 4 to Progression**				**Comments**
Visit Day (D)	**D-28 to D-1**	**D1**	**D8**	**D15**	**D22**	**D1**	**D8**	**D15**	**D22**	**D1**	**D8**	**D15**	**D22**	
Visit Window (D)	±0	±0	±2	±2	±2	±2	±2	±2	±2	±2	±2	±2	±2	
Study Procedure														
Brief neurological exam		X (C1)	X (as clinically indicated)											Brief baseline neurologic exam with ICE score should be assessed within 3 days prior to the first dose of linvoseltamab and before the administration of pre-medication.
Adverse Events		Ongoing												
Concomitant Medication		Ongoing												
Laboratory Testing (Local Lab):														If screening assessments (PE, hematology, blood chemistry) are performed within 3 days of C1D1, the C1D1 assessment does not need to be repeated unless otherwise specified.
Hematology	X	X	X	X	X	X	X*	X*	X*	X		X*		Performed predose. May be performed within 24 hours prior to study drug regimen administration, unless otherwise specified. See Section 9.2.3.7 for analytes. *Omit if neither linvoseltamab nor elotuzumab administered
CD4 and CD8 Lymphocyte Panel	X	X (C2)								X (C5D1 then Q3 cycles for 12 months)				All patients should have CD4+ and CD8+ T-cell counts checked at screening, C2D1, C5D1 then every 3 cycles for the first 12 months.
Blood Chemistry	X	X	X	X	X	X	X*	X*	X*	X		X*		Performed predose. May be performed within 24 hours prior to study drug regimen administration, unless otherwise specified. See Section 9.2.3.7 for analytes. *Omit if neither linvoseltamab nor elotuzumab administered
Urinalysis	X													See Section 9.2.3.7 for analytes

VV-RIM-00312509-1.0 Approved - 18 Aug 2023 GMT-5:00

	SCREENING	TREATMENT PERIOD												
Cycle (28 days)		**Cycle 1 & 2**				**Cycle 3**				**Cycle 4 to Progression**				**Comments**
Visit Day (D)	**D-28 to D-1**	**D1**	**D8**	**D15**	**D22**	**D1**	**D8**	**D15**	**D22**	**D1**	**D8**	**D15**	**D22**	
Visit Window (D)	±0	±0	±2	±2	±2	±2	±2	±2	±2	±2	±2	±2	±2	
Study Procedure														
Pregnancy Test	X (serum within 10-14 days from C1D1)	X (second serum pre-dose for EPd arm, urine test for linvoseltamab)	EPd arm only	EPd arm only	EPd	X (both arms)				X (both arms)				Performed predose. Two pregnancy tests, one 10-14 days prior to start of study drug and one within 24 hours prior to start of study drug must be serum pregnancy tests in EPd arm and both negative. After screening, subsequent tests may be performed on urine within 24 hours prior to study drug administration and supervised pregnancy test before dispensing Pomalidomide on C1D1. Urine test must have a sensitivity of at least 25 mIU/mL.
CRP and Ferritin	X	For CRP and Ferritin sample collection, refer to Table 14												
PK, Immunogenicity (ADA), and sBCMA Samples														
PK/Drug Conc. Sample		For PK/Drug Conc. Sample collection, refer to Table 14												
Anti-Drug Antibody (ADA) Sample		For ADA sample collection, refer to Table 14												In the event of AESI, samples may be collected for ADA analysis at or near the event when possible. Samples will be taken predose on days of study drug administration.
Linvoseltamab/Elotuzumab Drug Interference Serum Sample		X	X (C1D1 then Q4 weeks regardless of study drug administration)											Samples will be taken predose on days of study drug administration.
sBCMA		For sBCMA sample collection, refer to Table 14												
Biomarker Samples (Peripheral Blood):														

VV-RIM-00312509-1.0 Approved - 18 Aug 2023 GMT-5:00

	SCREENING	TREATMENT PERIOD												
Cycle (28 days)		**Cycle 1 & 2**				**Cycle 3**				**Cycle 4 to Progression**				**Comments**
Visit Day (D)	**D-28 to D-1**	**D1**	**D8**	**D15**	**D22**	**D1**	**D8**	**D15**	**D22**	**D1**	**D8**	**D15**	**D22**	
Visit Window (D)	±0	±0	±2	±2	±2	±2	±2	±2	±2	±2	±2	±2	±2	
Study Procedure														
Immunophenotyping, and RNA analysis		X	X	X		X				X (Only at suspected PD or CR)				Samples will be taken predose.
Serum Cytokine Profiling	For Serum Cytokine sample collection, refer to Table 14													
Serum for Exploratory Biomarker		X				X				X (Only at suspected PD or CR)				Samples will be taken predose.
Plasma for Exploratory Biomarker		X				X				X (Only at suspected PD or CR)				Samples will be taken predose.
Serum for FBR Use (Optional)		X				X				X (Only at suspected PD or CR)				For patients who consent to separate optional FBR sub-study.
Plasma for FBR Use (Optional)		X				X				X (Only at suspected PD or CR)				For patients who consent to separate optional FBR sub-study.
DNA (Pharmacogenomics Sample)		X												C1D1 only. Sample will be taken predose.
Patient-reported outcomes (PROs) Assessment														
BPI-SF Full Instrument	X (prior to randomization)	X	X	X	X	X				X (start of each treatment cycle)				For patients who discontinue treatment before week 12, their PROs will continue to be collected until week 12.
BPI-SF Item 3 “Worst Pain Score in the last 24 hours”	at least 7 consecutive days prior to cycle 1 day 1 (day -7 to day -1)	Daily				To be completed 7 consecutive days prior to day 1 of each cycle (ie D22 to D28 of the prior cycle)								These assessments may be completed at home. Prior to randomization, sites to remind the participant to complete. For patients who discontinue treatment before week 12, their PROs will continue to be collected until week 12.
Analgesic log	at least 7 consecutive	Daily				To be completed 7 consecutive days prior to day 1 of each cycle (ie D22 to D28 of the prior cycle)								These assessments may be completed at home. Prior to

VV-RIM-00312509-1.0 Approved - 18 Aug 2023 GMT-5:00

	SCREENING	TREATMENT PERIOD												
Cycle (28 days)		**Cycle 1 & 2**				**Cycle 3**				**Cycle 4 to Progression**				**Comments**
Visit Day (D)	**D-28 to D-1**	**D1**	**D8**	**D15**	**D22**	**D1**	**D8**	**D15**	**D22**	**D1**	**D8**	**D15**	**D22**	
Visit Window (D)	±0	±0	±2	±2	±2	±2	±2	±2	±2	±2	±2	±2	±2	
Study Procedure														
	days (day -7 to day -1)													randomization, sites to remind the participant to complete. For patients who discontinue treatment before week 12, their PROs will continue to be collected until week 12.
EORTC QLQ-C30	X (prior to randomization)	X	X	X	X	X				X (start of each treatment cycle)				For patients who discontinue treatment before week 12, their PROs will continue to be collected until week 12.
EORTC QLQ-MY20	X (prior to randomization)	X	X	X	X	X				X (start of each treatment cycle)				
EQ-5D-5L	X (prior to randomization)	X	X	X	X	X				X (start of each treatment cycle)				
PRO-CTCAE (5 symptomatic toxicities including fatigue, dyspnea, nausea, sensory neuropathy, diarrhea)	X (prior to randomization)	X	X	X	X	X				X (start of each treatment cycle)				
FACIT GP5	X (prior to randomization)	X	X	X	X	X				X (start of each treatment cycle)				See Section 9.2.9
PGIS	X (prior to randomization)	X	X			X				X (start of each treatment cycle)				

VV-RIM-00312509-1.0 Approved - 18 Aug 2023 GMT-5:00

	SCREENING	TREATMENT PERIOD												
Cycle (28 days)		**Cycle 1 & 2**				**Cycle 3**				**Cycle 4 to Progression**				**Comments**
Visit Day (D)	**D-28 to D-1**	**D1**	**D8**	**D15**	**D22**	**D1**	**D8**	**D15**	**D22**	**D1**	**D8**	**D15**	**D22**	
Visit Window (D)	±0	±0	±2	±2	±2	±2	±2	±2	±2	±2	±2	±2	±2	
Study Procedure														
PGIC			X			X				X (start of each treatment cycle)				

aPTT=Activated partial thromboplastin time; C=Cycle; CMV= Cytomegalovirus; CR=Complete response; CRP=C-reactive protein; CT=Computed tomography; D=Day; DIRA=Daratumumab interference reflex assay; DNA=Deoxyribonucleic acid; Echo=Echocardiogram; ECOG=Eastern Cooperative Oncology Group; EPd=elotuzumab, pomalidomide, and dexamethasone; FBR=Future biomedical research; FLC=Free light chain; HBV=Hepatitis B virus; HCV=Hepatitis C virus; HIV=Human immunodeficiency virus; IgA=Immunoglobulin A; IgD=Immunoglobulin D; IgE=Immunoglobulin E; IgG=Immunoglobulin G; IgM=Immunoglobulin M; INR=International normalized ratio; ISS=International Staging System; MRD=Minimal residual disease; MRI=Magnetic resonance imaging; MUGA=Multigated acquisition scan; PD=Progressive disease; PE=Physical examination; PET-CT=Positron emissions tomography-computed tomography; PK=Pharmacokinetic; PT=Prothrombin time; PTT=Partial thromboplastin time; RNA=Ribonucleic acid; SPEP=Serum protein electrophoresis; UPEP=Urine protein electrophoresis

VV-RIM-00312509-1.0 Approved - 18 Aug 2023 GMT-5:00

Table 14: Schedule of Events: Pharmacokinetic, Immunogenicity, and Pharmacodynamic Sample Collection Timepoints

Cycles (28 days)	Visit Day	Time Point	PK Samples (linvoseltamab treated patients only)	Cytokines (All Patients)	CRP and Ferritin (All patients)	ADA (All patients)	sBCMA (All patients)
Cycle 1	**D1**	Predose	X	X	X	X	X
		EOI	X	X	X		
	D8	Predose	X	X	X		
		EOI	X	X	X		
	D15	Predose	X		X		X
		EOI	X	X	X		
	D22	Predose	X		X		X
		EOI	X	X	X		
Cycles 2 to 3	**D1**	Predose	X		X	X (Only C3)	X
		EOI	X	X	X		
Cycle 6+	**D1**	Predose	X (C6, C9, C12, and then every 6th cycle)			X (C6, C9, C12, and then every 6th cycle)	X (C6, C9, C12, and then every 6th cycle)
		EOI	X (C6, C9, C12, and then every 6th cycle)				

VV-RIM-00312509-1.0 Approved - 18 Aug 2023 GMT-5:00

Table 15: Schedule of Events: Follow-up Period

	FOLLOW-UP PERIOD				Survival Visit	
	Safety Follow-up Visit			Efficacy Follow-up Visit		
Study Visit Week (W)	Post last Dose			Post Safety Follow-Up		
Visit	**EOT Day 22**	**Day 60**	**Day 90**	**Q8W (W20, W28, …)**	**Q12W Post Efficacy Follow-up**	**Comments**
Visit Window (D)	±7	±14	±14	±7	±30	
Study Procedures						
Efficacy:						
Overall Response Assessment	X	X	X	X		After day 22 visit, central response assessment and myeloma labs are not required once progression is confirmed, or subsequent systemic myeloma therapy begins
SPEP	X	X	X	X		
24 hr urine for UPEP	X	X	X	X		
Serum and Urine Immunofixation	X	X	X	X		
Serum FLC Testing	X	X	X	X		
Bone Marrow Aspirate and/or Biopsy including MRD	X (see comments)			X (see comments)		For safety follow-up: bone marrow aspirate and/or core biopsy are required within 4 weeks of PD, if progression occurs beyond 8 weeks from first administration of study drug For efficacy follow-up: Collect bone marrow aspirate every 12 months ±1 month to confirm MRD and for exploratory research after initial assessment for patients in ≥prolonged VGPR. For participants with an initial MRD positive test, an optional repeat bone marrow aspirate can be collected within 6 months to reassess MRD status in participants remaining in VGPR or better.
Immunoglobulin Quantification (IgA, IgM, IgG, IgD, IgE)	X	X	X	X		Efficacy follow-up should include IgA and IgD only
Radiological Exam (FDG PET-CT, low dose CT or MRI)			X	X		Radiological exam should be performed every 16 weeks only in participants with measurable lesions known at baseline who have not had confirmed disease progression
Hospitalization						
Treatment-related Hospitalization (planned + unplanned due to AEs)	Hospitalization data (including general ward, ICU, ER visits) will be collected continuously as they occur					Collect hospitalization data until end of safety follow-up, at minimum 90 days post last dose of study drug
Safety:						
Vital Signs	X	X	X			
Limited PE	X	X	X			
Weight	X					

VV-RIM-00312509-1.0 Approved - 18 Aug 2023 GMT-5:00

	FOLLOW-UP PERIOD				Survival Visit	
	Safety Follow-up Visit			Efficacy Follow-up Visit		
Study Visit Week (W)	Post last Dose			Post Safety Follow-Up		
Visit	**EOT Day 22**	**Day 60**	**Day 90**	**Q8W (W20, W28, …)**	**Q12W Post Efficacy Follow-up**	**Comments**
Visit Window (D)	±7	±14	±14	±7	±30	
Study Procedures						
ECG	X (as clinically indicated)					
ECOG Status	X	X	X			
Adverse Events	Ongoing			Only Related SAE		
Concomitant Medication	Ongoing			Only CM for Related SAE		
Next Subsequent Myeloma Therapy	Ongoing					Including drugs, dates of therapy and progression and best response
Brief neurological exam	X (as clinically indicated)					
Laboratory Testing (Local Lab):						
Hematology	X	X	X			
Blood Chemistry	X	X	X			
Pregnancy Test (Urine)	X	X	X			
PK and ADA Samples:						
PK/Drug Conc. Sample	X					
ADA Sample	X					
sBCMA	X					
Biomarker Samples (Peripheral Blood):						
Immunophenotyping and RNA analysis	X					
Serum for Exploratory Biomarker	X					
Plasma for Exploratory Biomarker	X					
Serum for FBR Use (Optional)	X					
Plasma for FBR Use (Optional)	X					
Patient-Reported Outcomes (PROs) Assessment						
BPI SF Full Instrument	X	X	X			
BPI-SF Item 3 “Worst Pain Score in the last 24 hours”	X					Collect 7 consecutive days prior to D22
Analgesic log	X					Collect 7 consecutive days prior to D22
EORTC QLQ-C30	X	X	X			
EORTC QLQ-MY20	X	X	X			
EQ-5D-5L	X	X	X			
PRO-CTCAE (5 symptomatic toxicities including fatigue,	X					

VV-RIM-00312509-1.0 Approved - 18 Aug 2023 GMT-5:00

	FOLLOW-UP PERIOD				Survival Visit	
	Safety Follow-up Visit			Efficacy Follow-up Visit		
Study Visit Week (W)	Post last Dose			Post Safety Follow-Up		
Visit	**EOT Day 22**	**Day 60**	**Day 90**	**Q8W (W20, W28, …)**	**Q12W Post Efficacy Follow-up**	**Comments**
Visit Window (D)	±7	±14	±14	±7	±30	
Study Procedures						
dyspnea, nausea, sensory neuropathy, diarrhea)						
FACIT GP5	X					See Section 9.2.9
PGIS	X					
PGIC	X					

9.1.1. Visit Schedules After Dose Delay

Missed doses or visits in a cycle will not be made up. In the case of missed doses, disease assessments should still follow original schedule, per calendar days. If a participant is unable to have disease assessment within the window due to logistical or medical reasons, disease assessment will be obtained at the next available date and before subsequent study treatment.

9.1.2. End of Treatment Visit

During the treatment period, participants who discontinue the study regimen as per Section 8.2.2, but who do not withdraw from the study, will be asked to return to the clinic for an end of treatment visit (22 days post last dose visit) and will be expected to continue with all relevant study assessments (eg, efficacy assessments and/or safety assessments) as per the Schedule of Events for Follow-up Period (Table 15).

A participant who withdraws consent to continue participation in the study will not be followed for any reason after consent has been withdrawn.

9.1.3. Unscheduled Visits

All attempts should be made to keep participants on the study schedule. Unscheduled visits may be necessary to repeat testing following abnormal laboratory results, for follow-up of AEs, or for any other reason, as warranted.

Relevant assessments that occur during unscheduled visits should be reported in the respective CRF for the visit date.

For participants who skip a dose, local safety labs results must be submitted collected at least once per cycle. In addition, all safety lab results that lead to dose delay or discontinuation must be collected and entered in electronic data capture (EDC).

VV-RIM-00312509-1.0 Approved - 18 Aug 2023 GMT-5:00

9.2. Study Procedures

9.2.1. Procedures Performed Only at the Screening/Baseline Visit

The following procedures will be performed for the sole purpose of determining study eligibility or characterizing the baseline population:

- Medical/oncology history (including timing of any prior CD38 antibody treatment)
- Demographics
- Complete physical examination
- Height
- ISS stage (Appendix 2)
  - β2-microglobulin
  - Albumin (included in the chemistry panel in Section 9.2.3.7)
- Brain MRI:
  - A brain MRI will be performed during screening for participants with history or clinical suspicion of myeloma involvement in the CNS. The purpose is to evaluate for evidence of CNS involvement of malignancy and/or for other findings that might preclude inclusion in the study per protocol eligibility criteria. If unable to obtain a brain MRI scan, a CT scan can be performed if approved by the sponsor.
- Evaluation of cardiac ejection fraction using either an Echocardiogram or MUGA scan
- Viral serologies: HIV, HBV, and HCV testing
- Coagulation parameters: prothrombin time (PT; international normalized ration [INR]) and activated partial thromboplastin (aPTT) or partial thromboplastin time (PTT) (at Screening only)

If a participant has an ineligible test result during screening (eg, lab result), it is permissible to repeat the test during the screening period.

Re-screening is allowed 1 additional time for those who fail initial screening. An ICF will need to be signed at the rescreening visit. Some procedures may not need to be repeated if they were previously completed within 28 days (±7 days) prior to the first dose.

The participant's clinical laboratory assessments must be repeated prior to C1D1 if they were collected >3 days prior to dosing, and the participant must continue to meet the eligibility criteria until C1D1.

9.2.2. Efficacy Procedures

All efficacy procedures will be conducted at the time points according to the Schedule of Events Table (Table 13), and follow-up period (Section 9.1.2). Efficacy assessments should be performed every 4 to 12 weeks (as appropriate) as relative to C1D1 even if dosing is interrupted as detailed in the Schedule of Events. If a participant is unable to have disease assessment within the window

VV-RIM-00312509-1.0 Approved - 18 Aug 2023 GMT-5:00

due to logistical or medical reasons, disease assessment should be obtained at the next available date and before subsequent study treatment.

9.2.2.1. Disease Assessment (Overall Response Assessment)

Disease assessments will be performed according to IMWG criteria (Kumar, 2016) based on biochemical readouts of MM activity (central lab) and imaging (local) when applicable according to the Schedule of Events for the treatment period (see Table 13), and follow-up period (Section 9.1.2). For participants where core biopsy is not available, bone marrow aspirate may be used to assess stringent CR (Rajkumar, 2011) (see Appendix 1).

Bone marrow aspirates and core biopsies will be assessed as described in Section 9.2.2.5 to enumerate plasma cell number at baseline and during study treatment.

Plasmacytoma biopsy may also be collected to monitor disease activity and for exploratory biomarker analysis as outlined in Section 9.2.2.4.

Serum and urine will be collected for monoclonal immunoglobulin detection and to determine the subtype of secreted myeloma protein by protein electrophoresis (SPEP/SIFE and UPEP/UIFE), respectively.

Serum free light chains and the corresponding ratio will be measured as well.

Immunoglobulin quantification of various subtypes will also be performed.

Two consecutive assessments will be required to confirm all responses and progressive disease with samples submitted for central laboratory testing (excluding biopsies and imaging). The second assessment can occur at the next scheduled or an unscheduled visit. In lieu of central laboratory testing, a confirmatory laboratory assessment done locally and entered into the EDC will be accepted. Potential disease progression in the first 6 weeks of study therapy should be reviewed with a study-independent Sponsor representative prior to removing the participant from study treatment.

If a central laboratory result is not available, a local laboratory result may be used.

9.2.2.2. Whole Body Imaging

Whole body imaging is mandatory during screening for all participants to determine the presence of skeletal lesions with or without soft tissue components and extramedullary plasmacytomas. Whole body ^{18}F-FDG PET/CT (PET/CT) is the preferred baseline imaging method, although whole body low dose CT and whole-body MRI are acceptable alternatives. If no plasmacytomas (eg, no lesions or lytic bone lesions only) are present at baseline, repeat only as clinically indicated (eg, new or worsening pain). Soft tissue plasmacytomas detected during screening should be documented, measured, and serially assessed (see guidance in Section 9.2.2.3). Baseline whole body imaging scans may be reviewed by central readers to assess presence or absence of plasmacytomas, and the appropriate radiological follow-up. Scans will be acquired according to the imaging acquisition manual.

9.2.2.3. Plasmacytoma Assessment

Known or suspected plasmacytomas with soft tissue involvement (bone-based or extramedullary) must be documented during screening by radiographic assessment and/or digital photography.

VV-RIM-00312509-1.0 Approved - 18 Aug 2023 GMT-5:00

Imaging should be adequate to measure the dimension of soft tissue lesions. PET/CT can be used to measure plasmacytomas if the CT component is of sufficient diagnostic quality. For plasmacytomas that cannot be accurately sized by non-contrast CT scan, an MRI of the involved region is required. Diagnostic CT scan evaluation is an acceptable alternative if there is no contraindication to the use of IV contrast. If cutaneous lesions are present during screening, then digital photography should capture those lesions with a ruler in view.

A baseline inventory of target and non-target lesions must be entered into the eCRF and serially assessed according to the guidelines in Table 16 (see below). The schedule of plasmacytoma assessments will be performed according to the Schedule of Events (Table 13) and follow-up period (Table 15). Repeat imaging should use the same imaging technique used during screening for reliable comparison. Plasmacytomas monitorable by physical examination should be checked during the focused physical examination performed at the start of each cycle of therapy. Details of the imaging procedures can be found in the imaging acquisition manual.

Note: For participants in Germany, radiological examination will only be performed by MRI or CT.

Table 16: Lesion Definitions and Imaging Assessment Schedule

Definition of Target and Non-Target Lesions:	
Target Bone-based plasmacytomas with soft tissue involvement (also known as paramedullary or paraskeletal plasmacytomas) • Soft tissue component must be ≥10 mm in short axis Extramedullary plasmacytomas involving: Viscera including skin (if measurable by CT or MRI) • Measurable target lesions must be ≥10 mm in short axis Lymph nodes • Measurable target lesions must be ≥15 mm in short axis **Non-Target** Any plasmacytomas with soft tissue involvement that measure <10 mm in short axis. Pathologic lymph nodes that measure ≥10 mm and <15 mm in short axis are considered non-target lesions. Cutaneous plasmacytomas are considered non-target lesions unless measurable by CT or MRI (see above). Other non-target lesions include plasmacytomas subjected to excision, biopsy, irradiation, or other local therapies.	
Post-Baseline Imaging Follow-up	
Baseline Imaging Findings	**On Treatment Imaging Follow-up**
No lesions detected by radiographic imaging or physical exam	As clinically indicated
Intraosseous lesions (osteolytic lesions and intraosseous plasmacytomas with no soft tissue involvement)	As clinically indicated
Cutaneous plasmacytomas not measurable by CT or MRI	Digital photography every 12 weeks, at time of suspected CR, and as clinically indicated
Target and non-target lesions (see above definitions)	PET/CT, CT, or MRI (same modality as baseline imaging) every 12 weeks, at time of suspected CR, and as clinically indicated

VV-RIM-00312509-1.0 Approved - 18 Aug 2023 GMT-5:00

Imaging Guidance for Progressive Disease
Biochemical PD does not require an imaging assessment to be performed. In the event that PD is solely determined by imaging assessment, images may be subject to central radiology review. Repeat imaging is not required to confirm radiographic PD.
Guidance for Suspected Pseudoprogression
Suspicious findings detected by imaging in the absence of other indicators of disease progression, for example an increase in FDG avidity without new osteolytic lesions, should prompt the investigator to engage in discussion with the sponsor to ensure that pseudoprogression is considered as a possible explanation. Subject treatment disposition will occur after careful review of laboratory data, clinical course, treatment history, and imaging abnormalities. Continuation on study may be appropriate if, in the opinion of the investigator and sponsor, the patient's best interest is served.

CR=complete response; CT=computed tomography; EMP=extramedullary plasmacytoma; FDG=fluorodeoxyglucose; MRD=minimal residual disease; MRI=magnetic resonance imaging; PD=progressive disease; PET=positron emission tomography

9.2.2.4. Plasmacytoma Biopsy

If plasmacytoma tissue is acquired during the study for any reason, a sample should be submitted to the central laboratory according to the laboratory manual to evaluate the plasma and immune cell infiltrate and perform other research testing such as protein and RNA analysis (including RNA sequencing). Additional analyses may include the following:

- Expression of BCMA and other plasma cell antigens to monitor resistance or response such as CD38 and signaling lymphocytic activation molecule family member 7 (SLAMF7)
- Number and distribution of tumor-infiltrating lymphocytes (TILs) relative to malignant plasma cells (eg, CD8+ T cells, CD4+ T cells, Treg, and tissue permitting, other subtypes such as B cells, myeloid-derived cells, NK cells)
- Expression levels (mRNA and/or protein) of check-point modulators (analysis may include nucleic sequencing methods as well as additional methodologies).

9.2.2.5. Bone Marrow Aspirate and Core Bone Marrow Biopsy

For all participants, a bone marrow aspirate and core biopsy must be performed according to the Schedule of Events (Table 13) and follow-up period (Table 15) as summarized below:

- If progression occurs beyond 8 weeks from first administration of study drug, a subsequent bone marrow aspirate and/or core biopsy will be collected within 4 weeks of PD.
- Upon suspected CR, a bone marrow aspirate and/or core biopsy should be performed within 30 days to confirm CR or stringent CR. A bone marrow aspirate sample should be collected for MRD assessment.
- For participants who achieve a CR and remain in remission, a repeat bone marrow aspirate must be collected 12 months ± 1 month after initial CR confirmation for MRD assessment.

VV-RIM-00312509-1.0 Approved - 18 Aug 2023 GMT-5:00

- MRD will also be assessed in participants with prolonged VGPR for ≥3 months with disappearance of any soft tissue plasmacytomas. A repeat bone marrow aspirate must be collected 12 months ± 1 month after initial MRD negative determination.
- For participants with an initial MRD positive test, an optional repeat bone marrow aspirate can be collected within 6 months to reassess MRD status in participants remaining in VGPR or better.
- Subsequent bone marrow aspirates will be collected every 12 months in a subset of MRD negative patients to assess sustained MRD.
- Additional bone marrow exams should be performed as clinically indicated by the investigator.

In the event if archival tissue is not available for testing, the biopsy during the screening period must be performed. In addition to samples being evaluated locally, samples obtained from bone marrow aspirate and biopsy must be sent to central laboratory for cytogenetics, MRD clonality and may be evaluated using methods that include, but are not limited to immunohistochemistry, flow cytometry, fluorescence in situ hybridization (FISH), PCR as well as nucleic acid sequencing.

Samples will also be shipped to the central laboratory and be utilized for additional research testing (Section 9.2.8). Detailed instructions for sample collection and preparation are provided in the laboratory manual.

9.2.2.6. Minimal Residual Disease

Minimal residual disease is a prognostic marker and achievement of MRD negative status is associated with favorable outcome in MM patients (Martinez-Lopez, 2014). Minimal residual disease can be assessed according to IMWG guidelines (Kumar, 2016) by either flow cytometry (eg, EuroFLOW™) or next-generation sequencing (NGS). If the baseline sample can be used for clone identification and a matching MRD sample is available using the clonoSEQ® assay, this will be the primary method for determining MRD in the study. If the baseline sample is not evaluable, then flow cytometry may be used to evaluate MRD using a lab-developed EuroFLOW assay assessed centrally. Depending on the cell number collected, the limit of detection may be $\geq 10^{-5}$ sensitivity.

MRD will be assessed in patients with prolonged VGPR for at least 3 months with disappearance of soft tissue plasmacytomas to ensure patients with potential monoclonal antibody interference who may be in CR are tested for MRD. MRD will also be assessed in patients with CR or better.

Sample collection time points are noted for bone marrow sample collection in the Schedule of Events (Table 13) and follow-up period (Table 15). Collection procedures will be detailed for each method as described in the laboratory manual.

9.2.2.7. Overall Survival Data Collection

Every effort will be made to collect survival data quarterly via telephone for all participants at time points according to the Schedule of Events for Follow-up Period (Table 15), including participants who withdraw from the study for any reason but have not withdrawn consent to collect survival information. If the death of a participant is not reported, the date of the last participant contact in this study will be used in the determination of the participant's last known date of alive. If death

VV-RIM-00312509-1.0 Approved - 18 Aug 2023 GMT-5:00

is reported, efforts must be taken to determine the cause of death. If following up via telephone, the investigator may choose to collect survival data for all participants discontinued from their site on a fixed quarterly interval for practical reasons.

Updated survival status may be requested by the sponsor at any time during the course of the study. Upon sponsor notification, all participants who do not/will not have a scheduled study visit or study contact during the sponsor defined time period will be contacted for their survival status and its respective entry into the database (excluding participants who have a death event previously recorded).

9.2.3. Safety Procedures

All safety procedures, including ECOG, will be conducted at the time points according to the Schedule of Events (Table 13) and follow-up period (Table 15).

9.2.3.1. Body-Weight

Body weight will be assessed using calibrated scales and will be collected at the time points according to the Schedule of Events (Table 13) and follow-up period (Table 15). Participants should void (empty bladder) prior to weight assessment. Participants should be wearing undergarments only and no shoes during weight assessments. Body weight will be recorded to the nearest 0.1 kg.

9.2.3.2. Vital Signs

Vital signs, including temperature, sitting blood pressure, pulse, pulse oximetry [on dosing days] and respiration, will be collected predose at time points according to Schedule of Events (Table 13) and follow-up period (Table 15).

Vital signs should be collected as follows during linvoseltamab dosing:

- Cycle 1 D1, C1D8, and any repeat of initial or intermediate doses: vital signs will be taken predose/infusion, every 30 minutes (±15 mins) for the first 4 hours until EOI, hourly (±15 mins) until 4 hours following EOI, and then every 4 hours (±1 hour) up to 24 hours post-EOI (except for patients at C1D8 who are treated in an ambulatory setting for whom vital signs will be taken until 4 hours following EOI).
- C1D15 onwards on all dosing days until end of treatment: vital signs will be taken pre-infusion, every 30 minutes (±15 mins) for the first 1 hour from start of infusion, and hourly (±15 mins) until EOI, as applicable.
- Vital signs on days without dosing may be taken at any time during the visit, and pulse oximetry is not required.

Vital signs should be collected for EPd comparator arm predose on elotuzumab dosing days then according to standard of care and/or per local site guidelines.

Blood pressure should be measured after the participant has been resting quietly for at least 5 minutes. Blood pressure may be obtained from a seated or recumbent position and should be done consistently throughout the study. When scheduled at the same time as other procedures, vital signs should be measured prior to clinical laboratory assessments, PK, or exploratory sample collection.

VV-RIM-00312509-1.0 Approved - 18 Aug 2023 GMT-5:00

9.2.3.3. Physical Examination

A PE will be conducted at study visits according to the Schedule of Events (Table 13) and follow-up period (Table 15). Care should be taken to examine and assess any abnormalities that may be present, as indicated by the participant's medical history. Screening requires a complete PE; thereafter a limited PE may be performed at subsequent visits. If the physical examination is performed within 72 hours prior to W1D1, the assessment does not have to be repeated on W1D1.

9.2.3.4. Neurologic Examination

A brief neurologic examination will be conducted and ICE score will be recorded at study visits according to the Schedule of Events (Table 13) and follow-up period (Table 15) to screen and monitor participants for potential symptoms of neurotoxicity and ICANS. See Appendix 4 for additional information about the screening tool.

The CARTOX-10-based screening tool, termed the ICE score, grades neurotoxicity by assessing alterations in speech, orientation, handwriting, and concentration that are highly suggestive of the encephalopathy observed in patients with ICANS (Lee, 2019). Symptoms of ICANS may manifest as delirium, encephalopathy, aphasia, lethargy, difficulty concentrating, agitation, seizures, motor weakness, depressed level of consciousness, and cerebral edema. Symptoms excluded because they are less specific and are usually managed symptomatically are headaches, tremor, myoclonus, asterixis, and hallucinations (Lee, 2019). See Appendix 4 for additional information about the screening tool.

9.2.3.5. Electrocardiogram

A standard 12-lead ECG will be performed at time points according to Schedule of Events (Table 13) and follow-up period (Table 15). Electrocardiograms should be performed before blood is drawn during visits requiring blood draws. Heart rate will be recorded from the ventricular rate and the PR, QRS, and QT (identify QTcB or QTcF) intervals will be recorded. The ECG strips or reports will be retained with the source.

9.2.3.6. Pomalidomide Pregnancy Prevention

To avoid embryo-fetal harm and other related risks from pomalidomide treatment, all investigators and pharmacists must be compliant with the pregnancy prevention guidance in their region. All participants assigned to the EPd arm must enroll and comply with the pomalidomide pregnancy prevention program (eg, REMS program in the US, PPP in the EU) applicable to their region. When pomalidomide is supplied centrally and no local pomalidomide REMS program exists, then participants must adhere to the pomalidomide Global Pregnancy Prevention Plan. All associated documents should be filed in medical records and retained properly. On C1D1, the principal investigator/site delegate will confirm completion of the participant's enrollment in a pomalidomide risk minimization program. Before pomalidomide dosing at the start of each cycle, the principal investigator/site delegate will reconfirm and indicate in the EDC that the participant has reviewed and understood the important safety information, including pregnancy prevention measures. For more details and guidance about management of risks, refer to the current approved prescribing information for pomalidomide (Pomalyst® or Imnovid). For the pregnancy testing details and schedule, see Section 9.2.3.7 and Table 13.

VV-RIM-00312509-1.0 Approved - 18 Aug 2023 GMT-5:00

9.2.3.7. Laboratory Testing

Hematology, chemistry, urinalysis, and pregnancy testing samples will be analyzed by a local laboratory. Detailed instructions for blood sample collection are in the laboratory manual provided to study sites.

If a specific laboratory test is not routinely performed at a center, and instead, the center performs a different but equivalent test (eg, CO2 instead of bicarbonate; or urea instead of blood urea nitrogen), the equivalent test should be performed, and results collected. At centers where the bicarbonate (or equivalent) test is not performed as part of the routine chemistry panel, the test may be omitted.

Samples for laboratory testing will be collected at visits according to Table 13. Tests will include:

Blood Chemistry

Sodium	Total protein, serum	Total bilirubin and direct bilirubin
Potassium	Creatinine	Uric acid
Chloride	Blood urea nitrogen (BUN)	Creatine phosphokinase (CPK)
Carbon dioxide	Aspartate aminotransferase (AST)	Phosphorus
Calcium	Alanine aminotransferase (ALT)	
Glucose (random)	Alkaline phosphatase	
Albumin	Lactate dehydrogenase (LDH)	

Hematology

Hemoglobin	Differential:
Red blood cells (RBCs)	Neutrophils
White blood cells (WBCs)	Lymphocytes
Platelet count	Monocytes
Plasma cells (if applicable)	Basophils
	Eosinophils

Urinalysis

pH	Nitrite
Protein	WBC
Glucose	Bacteria
Blood	

Other Laboratory Tests

The following laboratory tests will be analyzed by the local laboratory:

- CD4+ and CD8+ T cell panel: CD4+ and CD8+ will be measured during screening and other timepoints defined in the Schedule of Events. Enumeration of T lymphocyte subsets should be performed locally at the indicated time points to monitor for signs of immunodeficiency.

VV-RIM-00312509-1.0 Approved - 18 Aug 2023 GMT-5:00

- Coagulation: PT/INR and aPTT/PTT will be measured during screening to establish a pretreatment baseline.
- CRP and Ferritin
- CMV Testing: Participants will be assessed for CMV infection with peripheral blood PCR assay at screening. PCR surveillance will continue on therapy at prespecified time points and as clinically indicated.

All study participants must undergo serum pregnancy testing at the time of screening. Additional testing is required according to the schedule of events (Table 13).

Two negative serum beta-human chorionic gonadotropin (ß-hCG) pregnancy tests must be performed prior to the initiation of pomalidomide. The first test should be performed within 10 to 14 days and the second test within 24 hours prior to initiating pomalidomide. Subsequent pregnancy tests are required weekly during cycle 1 and 2 and then monthly for women with regular menstrual cycles or every 2 weeks for women with irregular menstrual cycles. Additional pregnancy testing may be performed as clinically indicated and/or consistent with any country specific requirements per local prescribing information for pomalidomide.

Abnormal Laboratory Values and Laboratory Adverse Events

All laboratory values must be reviewed by the investigator or authorized designee.

Significantly abnormal test results that occur after start of treatment must be repeated to confirm the nature and degree of the abnormality. When necessary, appropriate ancillary investigations should be initiated. If the abnormality fails to resolve or cannot be explained by events or conditions unrelated to the study medication or its administration, the Medical/Study Director must be consulted.

The clinical significance of an abnormal test value, within the context of the disease under study, must be determined by the investigator.

Criteria for reporting laboratory values as an AE are provided in Section 10.1.1.

9.2.3.8. ECOG Status

ECOG status will be assessed at study visits according to the Schedule of Events (Table 13), and follow-up period (Table 15).

9.2.4. Drug Concentration and Soluble BCMA Measurements

Blood samples for the assessment of total linvoseltamab concentration in serum will be collected after the first dose and throughout the treatment period according to Table 14. Actual sample collection times will be recorded. Detailed instructions for blood sample collection are provided in the laboratory manual.

Blood samples will be collected for total sBCMA for both the monotherapy and the control arm. sBCMA samples will be collected from both linvoseltamab treated arm and control arm and will be a separate collection from linvoseltamab PK samples even from the treatment arm.

Any unused samples may be used for exploratory research including assay development and/or validation, biomarker research (Sections 9.2.6.1 and 9.2.6.2), and/or FBR (Section 9.2.7).

VV-RIM-00312509-1.0 Approved - 18 Aug 2023 GMT-5:00

9.2.5. Immunogenicity Measurements and Samples

Blood samples for ADA assessment in serum will be collected at time points according to Table 14. Detailed instructions for blood sample collection are provided in the laboratory manual.

Samples that are positive in the linvoseltamab ADA assay will be banked for the analysis of NAb, until the linvoseltamab NAb assay is available.

Any unused samples may also be used for exploratory research including assay development and/or validation, biomarker research (Section 9.2.6.1), and/or FBR (Section 9.2.7).

9.2.6. Pharmacodynamic and Exploratory Biomarker Procedures

In this study, biomarker assessments in blood and bone marrow cells, serum, and plasma samples will be performed to explore the mechanism of action of linvoseltamab and the combination with elotuzumab, pomalidomide, and dexamethasone. Target engagement of T cells, by linvoseltamab, and NK cells by elotuzumab can be informed by cell activation markers in peripheral blood analysis. Additional biomarkers that may be associated with possible toxicities, the predictive value of specific biomarkers with respect to safety, drug exposure, and efficacy, and biomarkers of MM or relevant physiological and pathogenic processes will be evaluated.

These samples are distinct from the FBR samples as outlined in Section 9.2.7.

The analyses performed in the sections below may not be reported in the CSR. The collected samples will be stored for up to 15 years after the final date of the database lock. The samples may be utilized for exploratory research of MM, the mechanism of action of each treatment regimen. After 15 years, any residual samples will be destroyed.

9.2.6.1. Peripheral Blood Biomarkers

Samples for peripheral blood (plasma, serum and blood for cell, RNA and DNA analyses) will be collected at time points according to the Schedule of Events (Table 13) and follow-up period (Table 15).

Biomarker assays may include, but will not be limited to, the following:

- Immunophenotyping of T cell and B cell subsets and other cell populations (including monocytes and NK cells) in peripheral blood (by flow cytometry) will be performed to assess baseline and post-treatment changes.
- Additional exploratory analyses requiring blood for DNA or RNA isolation may include but are not limited to exome sequencing, bulk RNA analysis (including RNA sequencing), microsatellite instability, T-cell and B-cell clonality, and immune receptor repertoire sequencing.

9.2.6.2. Cytokines in Serum and Other Biomarkers

Peripheral blood for serum samples will be collected for cytokine analysis at sampling time points according to the Schedule of Events (Table 13). These may also be used to evaluate additional biomarkers of interest relating to MM disease and linvoseltamab or comparator mechanism of action, including exploratory FLC testing and evaluation of myeloma protein using exploratory assays including, but not limited to mass spectrometry, to quantify patient's myeloma protein

VV-RIM-00312509-1.0 Approved - 18 Aug 2023 GMT-5:00

without an interference from linvoseltamab or elotuzumab. Cytokine activation triggered by binding of linvoseltamab to T cells may reflect T-cell activation. Understanding the magnitude and time course of pharmacodynamic changes in serum cytokines may inform dosing and help understand safety and efficacy. Unused samples may be stored for up to 15 years after the final date of the database lock for exploratory research.

9.2.6.3. Bone Marrow Exploratory Analyses

If sufficient bone marrow aspirate or core biopsy tissue is available after monitoring disease burden and confirming CR and MRD, samples may be stored for analysis of cell, DNA, RNA, or protein to quantify the following:

- Plasma cell (malignant and normal) enumeration and phenotyping
- B-cell and T-cell immune receptor repertoires by sequencing
- Number and distribution of TILs relative to malignant plasma cells (CD8+ T cells, CD4+ T cells, Treg, and tissue permitting, other subtypes such as B cells, myeloid-derived cells, NK cells, etc)
- Expression levels (mRNA and/or protein) of check-point modulators (analysis may include nucleic sequencing methods as well as additional methodologies)
- Mutations in known oncogenes and potential tumor neoantigens
- Expression of BCMA and other plasma cell antigens to monitor resistance or response such as CD38 and SLAMF7 (target of elotuzumab)

Additional biomarkers may be measured (for example, exome sequencing, single cell RNA analysis, microsatellite instability, T-cell and B-cell clonality and immune receptor repertoires), tissue permitting.

9.2.7. Future Biomedical Research (Optional)

Participants who agree to participate in the future biomedical research (FBR) sub-study will be required to consent to this optional sub-study before samples are banked for FBR. Additional serum and plasma samples will be collected at specific visits for FBR. In addition, unused PK and ADA samples, will be stored for up to 15 years after the final date of the database lock (or for a shorter time period if required per regional laws and regulations). The samples may be utilized for FBR that may or may not be directly related to the study, including being used as reference samples and assay development or validation. The results of these future biomedical research analyses will not be presented in the CSR.

9.2.8. Pharmacogenomic Analysis

Whole blood samples for DNA and RNA extraction will be collected from peripheral blood and bone marrow cells for pharmacogenomic analyses to understand the genetic determinants of efficacy and safety associated with the treatments in this study and the molecular basis of MM (see Table 13).

These samples will be single-coded as defined by the International Council on Harmonisation (ICH) guideline E15. Samples will be stored for up to 15 years after the final date of the database

VV-RIM-00312509-1.0 Approved - 18 Aug 2023 GMT-5:00

lock (or for a shorter time period if required per regional laws and regulations). If there are specific site or country requirements involving the pharmacogenomic analyses which the sponsor is unable to comply with, samples will not be collected at those sites.

The purpose of the pharmacogenomic analyses is to identify genomic associations with clinical or biomarker response to linvoseltamab or to the combination of elotuzumab, pomalidomide, and dexamethasone in MM clinical outcome measures and possible AEs. In addition, associations between genomic variants and prognosis or progression of MM as well as related plasma cell diseases may also be studied. These data may be used or combined with data collected from other studies to identify and validate genomic markers related to the study drug, target pathway, or MM and related diseases.

Analyses may include sequence determination or single nucleotide polymorphism studies of candidate genes and surrounding genomic regions. Other methods, including whole-exome sequencing, whole-genome sequencing, T-cell receptor sequencing, DNA copy number variation, and transcriptome sequencing (or other methods for quantitating RNA expression) may also be performed. The list of methods may be expanded to include novel methodology that may be developed during this study or sample storage period. Results from the genomic analyses will not be reported in the CSR.

9.2.9. PRO Assessment Procedures

PRO measurements will include validated instruments BPI-SF (Cleeland, 1994), EORTC QLQ-C30 (Aaronson, 1993), EORTC QLQ-MY20 (Cocks, 2007) (Stead, 1999), and EQ-5D-5L (EuroQol., 2017). Two global anchors, the Patient Global Impression of Change (PGIC) and Patient Global Impression of Severity (PGIS) will be used to aid in the interpretation of EORTC QLQ-C30 and EORTC QLQ-MY20 results (Gary, 2020) (Guy, 1976). In addition, PRO-CTCAE (5 symptomatic toxicities including fatigue, dyspnea, nausea, sensory neuropathy, diarrhea) and FACIT GP5 will be used to assess symptomatic AEs and overall treatment side effect.

PRO measurements will be assessed according to the Schedule of Events (Table 13 and Table 14). The sequence of administration for PROs administered during the site visit will be in the following order: BPI-SF (full instrument), EORTC QLQ-C30, EORTC QLQ-MY20, EQ-5D-5L, PGIS, PGIC, PRO-CTCAE, FACIT GP5.

- BPI-SF has 4 pain intensity items and seven pain interference items rated on 0-10 scales, the location of pain in a visual diagram (Cleeland, 1994) and an item for pain medication (analgesic use). Pain severity measures the “worst pain,” “least pain,” “average pain,” and “pain now”. The questionnaire employs a 24-hour recall period. Atkinson (Atkinson, 2010) conducted a systematic evaluation of the psychometric aspects of BPI-SF in patients with cancer and concluded that BPI-SF and its Item 3 “pain at its worst in the last 24 hours” generically satisfy most key recommendations outlined in the (Food and Drug Administration (FDA), 2009) for assessing a pain-reduction treatment effect. Pain interference measures pain impacts on general activity, mood, walking activity, normal work, relations with other people, sleep, and enjoyment of life.

VV-RIM-00312509-1.0 Approved - 18 Aug 2023 GMT-5:00

- The EORTC QLQ-C30 is a 30-item, generic questionnaire used to assess HRQoL in patients with cancer (Cocks, 2007) (Stead, 1999). It is one of the most frequently used generic measures of HRQoL in cancer clinical trials. The EORTC QLQ-C30 assesses HRQoL across multiple domains, including global health status, global quality of life, functioning (physical, role, emotional, cognitive, and social functioning), symptom scales (fatigue, nausea and vomiting, pain,), and single items (dyspnea, insomnia, constipation, diarrhea, financial impact, and appetite loss).
- The EORTC QLQ-MY20 is a 20-item, disease-specific module which was developed to be used in conjunction with the EORTC QLQ-C30 to further assess HRQoL in patients with MM (Cocks, 2007) (Stead, 1999). The EORTC QLQ-MY20 assesses quality of life across multiple domains, including future perspectives, body image, MM-specific symptoms, and treatment side effects.
- The EQ-5D-5L is a self-administered generic standardized health status measure, consisting of an EQ-5D descriptive system and an EQ-VAS (visual analog scale) (EuroQol., 2017). The EQ-5D-5L descriptive system assesses 5 dimensions of health: mobility, self-care, usual activities, pain/discomfort, and anxiety/depression. Each dimension is rated on a 5-level scale: no problems, slight problems, moderate problems, severe problems and extreme problems. The EQ-VAS component is a vertical visual analog scale used by patients to rate their health.
- The PGIS is a single item used to evaluate patients' perception of disease severity. It can be adapted to assess the Patient's perception of the severity of a specific symptom (eg, pain) or category of symptoms (eg, disease-related symptoms, abdominal symptoms, etc) (Guy, 1976). The severity of the symptoms will be assessed on a 5-point scale (1 = no symptoms, 2 = mild symptoms, 3 = moderate symptoms, 4 = severe symptoms, 5 = very severe symptoms).
- The PGIC is a single item used to evaluate all aspects of patients' health and assesses if there has been an improvement or decline in clinical status. It can be adapted to assess the patient's impression of the change in a specific symptom (eg, pain) or category of symptoms (eg, disease related symptoms, abdominal symptoms, etc) (Hurst, 2004) (Guy, 1976). The change in symptoms is assessed on a 7-point scale (3 = much worse, 2 = moderately worse, 1 = a little worse, 0 = about the same, 1 = a little better, 2 = moderately better, 3 = much better).
- PRO-CTCAE, developed by National Cancer Institute (NCI), comprises 124 items capturing 78 common symptomatic AEs reported by cancer patients using a 7-day recall period. It evaluates the symptom attributes of frequency, severity, interference, amount, and presence/absence. To reduce patient burden, this study will assess 5 symptomatic toxicities including fatigue, dyspnea, nausea, sensory neuropathy, diarrhea identified with clinical experts from the 12 core symptoms recommended by NCI's Symptom Management and Health-Related Quality of Life Steering Committee to be used in oncology clinical trials (Trask, 2018). PRO-CTCAE is recommended by FDA in its recent draft guidance for cancer trials to assess the symptomatic AEs as a core PRO (FDA, 2021).

VV-RIM-00312509-1.0 Approved - 18 Aug 2023 GMT-5:00

- FACIT GP5 is a recommended item by FDA in its recent draft guidance for cancer trials to assess the overall treatment side effect as a core PRO (FDA, 2021). It uses a single item "I am bothered by side effects of treatment" on a 5-point scale (0 = not at all, 1 = a little bit, 2 = somewhat, 3 = quite a bit, 4 = very much).

Non-English-speaking participants will complete the questionnaire using validated language translations developed and recommended for each instrument.

VV-RIM-00312509-1.0 Approved - 18 Aug 2023 GMT-5:00

10. SAFETY EVALUATION AND REPORTING

10.1. Recording and Reporting Adverse Events

10.1.1. General Guidelines

The investigator must promptly record all clinical events occurring during the study data collection, from the time of signing the ICF to the end of on-treatment period (see Section 11.4.5.1). Medical conditions that existed or were diagnosed prior to the signing of the Informed Consent will be recorded as part of medical history. After signing the ICF but prior to first dose of study drug, only SAEs and AEs assessed as related to protocol procedure should be recorded as AEs in the EDC. Other AEs that occur prior to start of study drug should be recorded in the medical history page. Other AEs that occur prior to first treatment should be reported on the medical history case report form (CRF). Abnormal laboratory values and vital signs observed at the time of Informed Consent should also be recorded as medical history. Any subsequent worsening (ie, any clinically significant change in frequency and/or intensity) of a pre-existing condition that is temporally associated with the use of the study drug should also be recorded as an AE.

At each visit, the investigator will determine whether any AEs have occurred by evaluating the participant. Adverse events may be directly observed, reported spontaneously by the participant, or by questioning the participant at each study visit. Participants should be questioned in a general way, without asking about the occurrence of any specific symptoms. The Investigator must assess all AEs to determine seriousness, severity, and causality, in accordance with the definitions in Section 10.2. The Investigator's assessment must be clearly documented in the site's source documentation with the Investigator's signature. The Investigator should follow up on SAEs (and AESIs) until they have resolved or are considered clinically stable; AEs should be followed until they are resolved or last study visit, whichever comes first.

Always report the diagnosis as the AE or SAE term. When a diagnosis is unavailable, report the primary sign or symptom as the AE or SAE term with additional details included in the narrative until the diagnosis becomes available. If the signs and symptoms are distinct and do not suggest a common diagnosis, report them as individual entries of AE or SAE.

Laboratory results, vital signs, and other diagnostic results or findings should be appraised by the Investigator to determine their clinical significance. Isolated abnormal laboratory results, vital sign findings, or other diagnostic findings (ie, not part of a reported diagnosis) should be reported as AEs if they are symptomatic, lead to study drug discontinuation, dose reduction, require corrective treatment, or constitute an AE in the investigator's clinical judgment.

For events that are serious due to hospitalization, the reason for hospitalization must be reported as the SAE (diagnosis or symptom requiring hospitalization). A procedure is not an AE or SAE, but the reason for the procedure may be an AE or SAE. Pre-planned (prior to signing the Informed Consent Form) procedures, treatments requiring hospitalization for pre-existing conditions that do not worsen in severity, and admission for palliative or social care should not be reported as SAEs (see Section 10.2 for Definitions).

For deaths, the underlying or immediate cause of death should always be reported as an SAE.

VV-RIM-00312509-1.0 Approved - 18 Aug 2023 GMT-5:00

Progression of underlying malignancy will not be considered an AE or SAE if it is clearly consistent with the typical progression pattern of the underlying cancer (including time course, affected organs, etc.). Clinical symptoms of progression may be reported as AEs if the symptom cannot be determined as exclusively due to the progression of the underlying malignancy, or does not fit the expected pattern of progression for the disease under study. If there is any uncertainty about an AE being due only to progression of the underlying malignancy, it should be reported as an AE or SAE.

Any SAE that may occur subsequent to the reporting period (end of the on-treatment period) that the Investigator assesses as related to study drug should also be reported.

All AEs, SAEs, AESIs, and pregnancy reports are to be reported according to the procedures in Section 10.1.3.

10.1.2. Reporting Procedure

10.1.2.1. Individual Case Safety Reporting (ICSR)

All events (serious and non-serious) must be reported with investigator's assessment of the event's seriousness, severity, and causality to the (when applicable: blinded) study drug. All SAEs and AESIs must be reported to the sponsor (or designee) by completing the AE eCRF immediately, but no later than 24 hours of learning of the event. For SAEs and AESIs, a detailed narrative summarizing the course of the event, including its evaluation, treatment, and outcome should be provided on the AE CRF. IRR/CRS and ICANS events also need to be reported on their respective eCRF pages in a timely manner as defined in Section 10.1.3. Specific or estimated dates of event onset, treatment, and resolution should be included, when available. Medical history, concomitant medications, and laboratory data that are relevant to the event should also be summarized in the narrative. For fatal events, the narrative should state whether an autopsy was or will be performed, and include the results if available. Information not available at the time of the initial report must be documented in a follow-up report. Source documents (including hospital or medical records, diagnostic reports, etc.) will be summarized in the narrative on the AE CRF, and retained at the study center and available upon request.

Urgent safety queries must be followed up and addressed promptly. Follow-up information and response to non-urgent safety queries should be combined for reporting to provide the most complete data possible within each follow-up.

10.1.3. Events that Require Expedited Reporting to Sponsor

The following events also require reporting to the sponsor (or designee) within 24 hours of learning of the event:

- SAEs
- Selected AESIs (serious and nonserious): Adverse events of special interest for this study include the following:
  - Grade 3 or greater IRR events
  - Grade 2 or greater CRS (Lee, 2019)
  - Grade 3 or greater allergic reactions

VV-RIM-00312509-1.0 Approved - 18 Aug 2023 GMT-5:00

  - Grade 3 or greater infections
  - Grade 2 or greater ICANS events (graded according to (Lee, 2019))
  - Grade 3 or higher TLS
  - HBV re-activation

- **Pregnancy:** Although pregnancy is not considered an AE, it is the responsibility of the investigator to report to the sponsor (or designee), within 24 hours of identification, any pregnancy occurring in a female or female partner of a male, during the study or within 6 months of the last dose of study drug. Any complication of pregnancy affecting a female study participant or female partner of a male study participant, and/or fetus and/or newborn that meets the SAE criteria must be reported as an SAE. Outcome for all pregnancies should be reported to the sponsor.
- **Symptomatic overdose of study drug:** Accidental or intentional overdose of at least 2 times the intended dose of linvoseltamab should be reported as an AE, even if not associated with signs or symptoms. If the overdose is associated with signs or symptoms, the signs or symptoms should be reported separately according to AE or SAE requirements.

10.1.4. Other Adverse Events of Special Interest that do not Require Expedited Reporting to Sponsor

Although these AESI do not require expedited reporting to Sponsor, the following events are of interest and will involve specific data collection to characterize better:

- Grade 1 CRS
- Grade 1 ICANS
- Grade 1 or 2 IRR

10.1.5. Abnormal Laboratory, Vital Signs, or Electrocardiogram Results

The criteria for determining whether an abnormal objective test finding should be reported as an AE include:

- The test result is associated with accompanying symptoms, and/or
- The test result requires additional diagnostic testing or medical/surgical intervention, and/or
- The test result leads to a change in dosing (outside of protocol-stipulated dose adjustments), discontinuation of study drug, significant additional concomitant drug treatment, or other therapy.

Contact the Medical/Study Director in the event the investigator feels that an abnormal test finding should be reported as an AE, although it does not meet any of the above criteria.

Repeating an abnormal test, in the absence of any of the above conditions, does not constitute an AE. Any abnormal test result that is determined to be an error does not require reporting as an AE.

VV-RIM-00312509-1.0 Approved - 18 Aug 2023 GMT-5:00

Evaluation of severity of laboratory abnormalities will be assessed according to the scale outlined in Section 10.2.5.

Follow-up

Information for any non-SAE that starts during study treatment or within 90 days after last dose of study treatment will be collected from the time of the event until resolution of the event, or until the participant's last study visit, whichever comes first.

SAE information will be collected from the time of the event until the event is considered chronic and/or stable, or when the participant initiates a new anti-cancer treatment regimen, whichever comes first. Serious AEs thought to be related to study treatment may be followed longer.

10.2. Definitions

10.2.1. Adverse Event

An AE is any untoward medical occurrence in a participant administered a study drug which may or may not have a causal relationship with the study drug. Therefore, an AE is any unfavorable and unintended sign (including abnormal laboratory finding), symptom, or disease which is temporally associated with the use of a study drug, whether or not considered related to the study drug (ICH E2A Guideline. Clinical Safety Data Management: Definitions and Standards for Expedited Reporting, Oct 1994).

For studies with PRO, the PRO data are generally not reportable as individual AEs and thus will not be reported or reconciled as such.

10.2.2. Serious Adverse Event

An SAE is any untoward medical occurrence that at any dose:

- Results in **death** – includes all deaths, even those that appear to be completely unrelated to study drug (eg, a car accident in which a participant is a passenger).
- Is **life-threatening** – in the view of the investigator, the participant is at immediate risk of death at the time of the event. This does not include an AE that had it occurred in a more severe form, might have caused death.
- Requires in-patient **hospitalization** or **prolongation of existing hospitalization**. Inpatient hospitalization is defined as a hospital admission (any duration) or an emergency room visit for longer than 24 hours. Prolongation of existing hospitalization is defined as a hospital stay that is longer than was originally anticipated for the event, or is prolonged due to the development of a new AE as determined by the investigator or treating physician.
- Results in persistent or significant **disability/incapacity** (substantial disruption of one's ability to conduct normal life functions).
- Is a **congenital anomaly/birth defect**
- Is an **important medical event -** Important medical events may not be immediately life-threatening or result in death or hospitalization, but may jeopardize the participant or may require intervention to prevent one of the other serious outcomes listed above

VV-RIM-00312509-1.0 Approved - 18 Aug 2023 GMT-5:00

(eg, intensive treatment in an emergency room or at home for allergic bronchospasm; blood dyscrasias or convulsions that do not result in hospitalization; or development of drug dependency or drug abuse).

Hospitalization or death due solely to manifestations consistent with typical progression of underlying malignancy will not be considered an SAE.

Criteria for reporting SAEs must be followed for these events.

10.2.3. Adverse Events of Special Interest

An AESI (serious or non-serious) is one of scientific and medical interest specific to the sponsor's product or program, for which ongoing monitoring and rapid communication by the investigator to the sponsor can be appropriate. Such an event might warrant further investigation in order to characterize and understand it.

10.2.4. Infusion Reactions

Infusion reactions are defined in Section 8.3. All infusion reactions must be reported as AEs as described in Section 10.1. Depending on the nature of the event, rapid communication by the trial sponsor to other parties (eg, regulators) might also be warranted (Section 10.1.3).

10.2.5. Severity

The severity of AEs, infusion reactions, and test findings classified as AEs will be graded using the NCI-CTCAE v5.0 grading system.

Cytokine release syndrome will be graded according to Table 9 (Lee, 2019).

Neurotoxicity will be graded using the ICE score (Appendix 3).

Adverse events not listed in the NCI-CTCAE v5.0 will be graded according to the scale provided in Table 17.

Table 17: Grading System for Adverse Events

Grade	Severity	Description
1	Mild	Asymptomatic or mild symptoms; clinical or diagnostic observations only; intervention not indicated
2	Moderate	Minimal, local or noninvasive intervention indicated, limiting age-appropriate instrumental activities of daily living (ADL)*
3	Severe	Severe or medically significant but not immediately life-threatening; hospitalization or prolongation of hospitalization indicated; disabling; limiting self-care ADL†
4	Life-Threatening	Life-threatening consequences: urgent intervention indicated
5	Death	Death related to AE

ADL=Activities of daily living; AE=Adverse event

* Instrumental activities of daily living refer to preparing meals, shopping for groceries or clothes, using the telephone, managing money, etc

† Self-care activities of daily living refer to bathing, dressing and undressing, feeding self, using the toilet, taking medications, and not bedridden.

VV-RIM-00312509-1.0 Approved - 18 Aug 2023 GMT-5:00

10.2.6. Causality

The investigator must provide causality assessment as whether or not there is a reasonable possibility that the drug caused the AE, based on evidence or facts, his/her clinical judgment, and the following definitions. The causality assessment must be made based on the available information and can be updated as new information becomes available.

The following factors should be considered when assessing causality:

- Temporal relationship: time to onset vs time drug was administered
- Nature of the reactions: immediate vs long term
- Clinical and pathological features of the events
- Existing information about the drug & same class of drugs
- Concomitant medications
- Underlying and concurrent illnesses
- Response to dechallenge (drug discontinuation) or dose reduction
- Response to rechallenge (re-introduction of the drug) or dose increase, when applicable
- Participant's medical and social history

Causality to the study drug (including study drug administration):

- Related:
  - The AE follows a reasonable temporal sequence from study drug administration, and cannot be reasonably explained by the nature of the reaction, participant's clinical (eg, disease under study, concurrent diseases, concomitant medications), or other external factors.

or

  - The AE follows a reasonable temporal sequence from study drug administration, and is a known reaction to the drug under study or its class of drugs, or is predicted by known pharmacology.
- Not Related:
  - The AE does not follow a reasonable sequence from study drug administration, or can be reasonably explained by the nature of the reaction, participant's clinical state (eg, disease under study, concurrent diseases, and concomitant medications) or other external factors.

Causality to the study conduct (protocol specified procedure):

- Related:
  - The AE follows a reasonable temporal sequence from a protocol specified procedure, and cannot be reasonably explained by the nature of the reaction, participant's clinical (eg, disease under study, concurrent diseases, concomitant medications), or other external factors.

VV-RIM-00312509-1.0 Approved - 18 Aug 2023 GMT-5:00

- Not Related:
  - The AE does not follow a reasonable sequence from a protocol specified procedure, or can be reasonably explained by the nature of the reaction, participant's clinical state (eg, disease under study, concurrent diseases, and concomitant medications) or other external factors.

10.3. Safety Monitoring

The investigator will monitor the safety of study participant at his/her site(s) as per the requirements of this protocol and consistent with current Good Clinical Practice (GCP). Any questions or concerns should be discussed with the sponsor in a timely fashion. The sponsor will monitor the safety data from across all study sites. The Medical/Study Director will have primary responsibility for the emerging safety profile of the compound, but will be supported by other departments (eg, GPS; Biostatistics and Data Management). Safety monitoring will be performed on an ongoing basis (eg, individual review of SAEs) and on a periodic cumulative aggregate basis.

10.4. Notifying Health Authorities, Institutional Review Board /Ethics Committee, and Investigators

During the study, the sponsor and/or the contract research organization (CRO) will inform health authorities, IECs/IRBs, and the participating investigators of any SUSARs (Suspected Unexpected Serious Adverse Reactions) occurring in other study centers or other studies of the active study drug (linvoseltamab), as appropriate per local reporting requirements. In addition, the sponsor and/or CRO will comply with any additional local safety reporting requirements.

Upon receipt of the sponsor's notification of a SUSAR that occurred with the study drug, the investigator will inform the Institutional Review Board (IRB)/Ethics Committee (EC) unless delegated to the sponsor.

Event expectedness for study drug (linvoseltamab) is assessed against the Reference Safety Information section of the Investigator's Brochure that is effective for expedited safety reporting. Include the following sentence for studies with active comparators: Event expectedness for comparators (elotuzumab and pomalidomide) is assessed against the approved label.

At the completion of the study, the sponsor will report all safety observations made during the conduct of the trial in the Clinical Study Report to health authorities and IECs/IRB as appropriate.

VV-RIM-00312509-1.0 Approved - 18 Aug 2023 GMT-5:00

11. STATISTICAL PLAN

The statistical plan may be revised during the study to accommodate amendments to the clinical study protocol if necessary.

Endpoints are listed in Section 4. Analysis variables are listed in Section 5.

11.1. Statistical Hypothesis

Treatment with linvoseltamab monotherapy will improve PFS compared to EPd in participants with RRMM who have been previously exposed to CD38 antibodies. Therefore, the primary statistical test of hypotheses is set up as H0: PFS HR = 1 vs H1: PFS HR ≤1 in participants who have been previously exposed to CD38 antibodies, where PFS is measured using the IMWG criteria per IRC.

A key secondary hypothesis is that the treatment with linvoseltamab monotherapy will improve PFS compared to EPd in all participants with relapsed or refractory MM. Therefore, this test of hypotheses is set up as H0: PFS HR =1 vs H1: PFS HR ≤1 in all participants, where PFS is measured using the IMWG criteria per IRC.

11.2. Justification of Sample Size

The mPFS for EPd in participants who have been previously exposed to CD38 antibodies is expected to be approximately 6 months based on the experience with EPd in the Eloquent-3 study combined with the effect of prior CD38 antibodies on elotuzumab efficacy. Although in the Eloquent-3 study the mPFS for EPd was 10.3 months, as described in Section 3.2.1.5, mPFS is likely lower in patients previously exposed to CD38 antibodies. Elotuzumab mediates the killing of myeloma cells by NK cell mediated ADCC and ADCP, and daratumumab rapidly lowers NK cells in patients. Recovery of NK cells occurs over months, suggesting that EPd efficacy may be lower in patients with prior CD38 antibody-containing therapy. Consistent with these translational findings, small, uncontrolled retrospective studies and one recent prospective phase 2 study have suggested that the efficacy of elotuzumab-based regimens is negatively affected by previous exposure to daratumumab (Becnel, 2018) (Hoylman, 2020) (Ailawadhi, 2022a). Consistent with the findings of the Eloquent-3 study which enrolled mostly subjects who have not previously received CD38 antibodies, the mPFS in CD38-naïve subjects treated with EPd is expected to be approximately 10 months. Due to the expected high percentage of participants who have been previously exposed to CD38 antibodies in the present clinical setting, the mPFS for EPd in all participants in the study is expected to be approximately 7 months.

Linvoseltamab data in patients treated with a full dose of 200 mg in study 1826 are currently immature. Based on interim data presented at the 2022 Annual Meeting of the American Society of Hematology (data cutoff 01 Sep 2022), the ORR is 64% and the Kaplan-Meier estimated 6 month probability of maintaining response is 89%. Inclusion criteria in study 1826 requires that patients be at least triple-class exposed which implies a population exposed to a CD38 antibody. Based on these data, in study 2245 the mPFS for linvoseltamab monotherapy is hypothesized to be approximately 10 months in participants who have previously received CD38 antibodies. The mPFS for linvoseltamab monotherapy in all participants is hypothesized to be approximately 10.5 months based on a hypothesized mPFS of 14 months for the subset of study patients naïve to CD38

VV-RIM-00312509-1.0 Approved - 18 Aug 2023 GMT-5:00

antibodies. Assuming proportional hazards, these correspond to a targeted HR ≤0.6 for the primary PFS comparison and HR ≤0.667 for the key secondary PFS comparison (linvoseltamab vs EPd).

Assuming a true HR ≤0.6, at least 138 total PFS events are needed for 85% power to reject the primary null hypothesis (HR = 1) in favor of the alternative hypothesis (HR <1) at the 2-sided 0.05 level of significance (alpha) using a log-rank test for the primary PFS comparison. The independent statistical group supporting IDMC activities will track the number of events for the primary PFS analysis to determine when efficacy comparisons between arms may be conducted.

Assuming a true HR ≤0.667, at least 196 total PFS events are needed for 80% power to reject the secondary null hypothesis (HR = 1) in favor of the alternative hypothesis (HR <1) at the 2-sided 0.05 level of significance (alpha) using a log-rank test for the secondary PFS comparison. After the primary null hypothesis is rejected, the independent statistical group will continue to track the number of events for all participants for the secondary PFS analysis (including additional events accruing in participants previously exposed to a CD38 antibody).

Approximately 230 participants, who have been previously exposed to CD38 antibodies, with 1:1 randomization ratio is expected to yield the required 138 PFS events for the primary analysis. The primary PFS comparison may also be conducted after 81 PFS events in the control arm have been observed if a combined total of 138 PFS events still has not been reached in the two arms by that point. A total of 300 study participants with 1:1 randomization ratio is expected to yield the required 196 PFS events for the secondary comparison of PFS. The secondary PFS comparison may also be conducted after 115 PFS events in the control arm if a combined total of 196 PFS events still has not been reached in the two arms of all study participants by that point.

The timing of the analyses accounts for the assumption that 20% of the participants are not expected to progress during the timeframe of the study. This is in view of the plateauing of Kaplan–Meier curves of PFS for EPd in the Eloquent-3 study, and the Pd control arm in the Eloquent-3, ICARIA-MM and Apollo studies (Attal, 2019) and in light of data from the phase 1 portion of study R5458-ONC-1826 (28 Jan 2022 data cutoff) where the median DOR has been reached in only 1 cohort among the 6 highest dose levels.

Long-term survival follow-up will continue until at least 153 total deaths have been observed in both arms in participants who have been previously exposed to CD38 antibodies, which will correspond to at least 80% power to detect a 37% reduction in the hazard of death (HR = 0.63) using a log-rank test at a 2-sided alpha of 0.05 assuming a median OS of 38.1 months in the treatment arm and 24 months in the control arm. The final OS analysis may also be conducted after 90 deaths in the control arm if a combined total of 153 deaths still has not been reached in the two arms by that point.

Long-term survival follow-up will continue until at least 176 total deaths have been observed in both arms in all study participants, which will correspond to at least 80% power to detect a 35% reduction in the hazard of death (HR = 0.65) using a long-rank test at a 2-sided alpha of 0.05 assuming a median OS of 46.1 months in the treatment arm and 30 months in the control arm. The final OS analysis may also be conducted after 104 deaths in the control arm if a total of 176 deaths still has not been reached in the two arms by that point.

VV-RIM-00312509-1.0 Approved - 18 Aug 2023 GMT-5:00

11.3. Analysis Sets

11.3.1. Efficacy Analysis Sets

The full analysis set (FAS) will include all randomized participants; participants will be classified according to treatment allocated (as randomized; intention to treat [ITT] principle). The FAS will be used for primary summaries of participant characteristics and disposition, and analyses of efficacy endpoints.

11.3.2. Safety Analysis Set

The safety analysis set (SAF) will include all randomized participants who receive at least one dose of any study drug; participants will be classified according to treatment received (as treated). Treatment compliance/administration and all clinical safety variables will be analyzed using the SAF.

11.3.3. Pharmacokinetic Analysis Sets

The PK analysis population will include all participants who received at least 1 dose of any study drug and who had a at least 1 non-missing PK result following the first dose of study drug.

11.3.4. Immunogenicity Analysis Sets

11.3.4.1. Antidrug Antibody Analysis

The ADA analysis set will include all treated participants who received any amount of any study drug and had at least 1 non-missing ADA result following the first study dose. The ADA analysis set is based on the actual treatment received (as treated) rather than randomized.

11.3.4.2. Neutralizing Antibody Analysis

The NAb analysis sets are defined for each study drug separately and include all treated participants that are included in the ADA analysis set and that tested negative at all ADA sampling times or tested positive at one or more post-dose ADA sampling times and had at least one non-missing post-dose NAb result (either imputed or analysis result). Samples that tested negative for ADA are not assayed in the NAb assay and the corresponding NAb results are imputed as negative and included as such in the NAb analysis set. Participants in the NAb analysis set with multiple post-dose ADA results which consist of both imputed NAb-negative result(s) for ADA negative samples and only missing NAb results for all ADA-positive result(s), are set to NAb negative. Participants in the NAb analysis set that have at least one post-dose positive NAb analysis result are set to NAb positive even if other NAb results are missing.

11.3.5. Patient-Reported Outcome Analysis Sets

Patient reported outcomes will be analyzed using the FAS.

11.3.6. Biomarker Analysis Set

The biomarker analysis set will include all treated participants who have an available baseline biomarker result. For biomarkers that will be analyzed over time this population will include all participants who have an available baseline and at least 1 available post-dose sample.

VV-RIM-00312509-1.0 Approved - 18 Aug 2023 GMT-5:00

11.4. Statistical Methods

For continuous variables, descriptive statistics will include the following information: the number of participants reflected in the calculation (n), mean, standard deviation, Q1, median, Q3, minimum, and maximum. In addition, 25th percentile and 75th percentile may be provided if needed.

For categorical or ordinal data, frequencies and percentages will be displayed for each category.

11.4.1. Participant Disposition

The number and percentage of participants screened, randomized, and the primary reasons for screening failure and discontinuation will be summarized.

11.4.2. Demography and Baseline Characteristics

Demographic variables (eg, age, race, and gender), baseline characteristics, medical history, and prior and concomitant mediations and therapies will be summarized by treatment group. See Section 5.1 for a full list of demographic and baseline variables. No statistical hypothesis tests will be performed on these characteristics.

11.4.3. Efficacy Analyses

11.4.3.1. Primary Efficacy Analysis

Progression-free survival (PFS) is defined as the time from randomization until the first date of PD, or death due to any cause, whichever occurs first. The censoring rules for PFS are detailed in Table 18.

Table 18: Censoring Rules for PFS - Primary Efficacy Analysis

Situation	Date of Event/Censoring	Outcome
No baseline assessment	Date of randomization	Censored
No post-baseline assessment and no death within the first 30 days	Date of randomization	Censored
No post-baseline assessment and death reported within the first 30 days	Date of death	Event
No disease progression (per IMWG) and no death reported within 30 days from the last assessment	Date of last disease assessment	Censored
No disease progression (per IMWG) and death reported within 30 days from the last assessment	Date of death	Event
Disease progression per IMWG	Date of disease progression	Event
No disease-progression and new anti-cancer therapy started	Date of last disease assessment prior to start of new therapy	Censored
No disease progression and patient lost to follow-up or withdrawal of consent	Date of last disease assessment	Censored

VV-RIM-00312509-1.0 Approved - 18 Aug 2023 GMT-5:00

The PFS endpoint will be determined through blinded independent central review (BICR) by an IRC per IMWG criteria (Kumar, 2016). PFS comparison will be conducted using a 2-sided log-rank test stratified by variables defined in Table 3. A point estimate of the HR along with its corresponding two-sided 95% CI will be produced based on a Cox proportional hazards model with Efron's method for tie handling using the treatment and stratifications defined in Table 3 as covariates. PFS curves, PFS medians with 95% CIs, and PFS rates at 3, 6, 9, and 12 months with 95% CIs will be estimated using the Kaplan-Meier method.

The primary analysis of PFS data in participants who have been previously exposed to CD38 antibodies is planned when the earlier of the following two conditions are met:

- There are at least 138 total PFS events observed in both arms combined; or
- There are at least 81 PFS events observed in the control arm alone.

11.4.3.2. Secondary Efficacy Analysis

11.4.3.2.1. Key Secondary Analyses

11.4.3.2.1.1. Progression-free Survival

The secondary analysis of PFS data, in all study participants, is planned when the earlier of the following two conditions are met:

- There are at least 196 total PFS events observed in both arms; or
- There are at least 115 PFS events observed in the control arm alone.

One interim analysis of PFS in all study participants will be performed when the primary efficacy analysis of PFS in prior CD38 exposed participants is conducted (See Section 11.4.4). The secondary PFS comparison will be conducted using a 2-sided log-rank test stratified by variables defined in Table 3.

The point estimate of the HR along with its corresponding two-sided 95% CI will be produced based on a Cox proportional hazards model with Efron's method for tie handling using the treatment and stratifications defined in Table 3 as covariates. PFS curves, PFS medians with 95% CIs, and PFS rates at 3, 6, 9, and 12 months with 95% CIs will be estimated using the Kaplan-Meier method.

11.4.3.2.1.2. Overall Response Rate

ORR is defined as the proportion of participants who achieve a best overall response of PR or better in the FAS population. Among patients eligible solely based on serum M-protein ≥0.5 g/dL and <1 g/dL, responders are defined as those achieving a best overall response of VGPR or better. For all other patients, responders are defined as those achieving a best overall response of PR or better. To minimize the impact on overall response assessment, patients eligible solely based on serum M-protein ≥0.5 g/dL and <1 g/dL will be capped to ≤5% of the total study population. Since disease measurements also include urine M-protein and serum free light chain, it is hoped that only a small percentage of patients will need to be excluded due to not meeting measurability criteria, and few patients will be forced to wait for an increase in tumor burden to become eligible for study

VV-RIM-00312509-1.0 Approved - 18 Aug 2023 GMT-5:00

therapy. ORR analysis will be conducted in participants who have been previously exposed to CD38 antibodies and in all study participants separately.

ORR will be compared between the 2 arms using the Cochran-Mantel-Haenszel test stratified by the aforementioned stratification factors (Table 3). Associated odds ratios (OR) and 95% CIs will be provided. In addition, the ORR and the corresponding 95% CIs for each arm will be calculated using the Clopper-Pearson method.

The VGPR-or-better rate is defined as the proportion of participants who achieve a best overall response of VGPR or better based on ITT population. The VGPR-or-better rate will be analyzed in participants who have been previously exposed to CD38 antibodies and in all study participants using the same method as that of ORR.

11.4.3.2.1.3. Minimal Residual Disease

Rate of achieving MRD negative disease status (MRD-negativity) is defined as the proportion of participants in the ITT population who achieve post-baseline MRD negativity at the 10^{-5} threshold of CR or sCR per IMWG criteria. Additionally, analyses will include the rate of MRD negativity among participants who achieved prolonged VGPR for ≥3 months with disappearance of any soft tissue plasmacytomas. The rates will be summarized for participants who have been previously exposed to CD38 antibodies and in all study participants separately. The MRD negativity rate will be analyzed using the same method as ORR.

11.4.3.2.1.4. Overall Survival

OS is measured from randomization until death due to any cause. All deaths prior to the data cutoff date, regardless of the cause of death, will be included. All subjects who are lost to follow-up prior to the data cutoff date will be censored at the last known alive date. Subjects who are not lost-to-follow-up and are still active on the study, whether on treatment or in follow-up, as of the data cutoff date, will be censored at the cutoff date. Subjects who have discontinued participation in the study will be censored at the study discontinuation date. The OS comparing the two arms will be analyzed using the same method for the primary PFS per IRC. OS curves, OS medians with 95% CIs, and OS rates at 6, 12, 18, and 24 months with 95% CIs will be estimated using Kaplan-Meier method. OS will be analyzed in participants who have been previously exposed to CD38 antibodies after a total of 153 deaths have been observed. OS will be analyzed in all study participants separately after a total of 176 deaths have been observed.

11.4.3.2.1.5. Pain PRO Key Secondary Endpoint

Treatment discontinuation, analgesic use and death are identified as intercurrent events of interest for this endpoint. A treatment policy strategy will be used for treatment discontinuation. As such, efforts will be made to continue data collection of PRO pain data for those who discontinue the treatment before week 12 through to week 12. Increase in analgesic use is defined as an increase in the modified AQA score (see Appendix 5) from baseline. A composite strategy will be employed to account for increases in analgesic use with Item 3 of BPI-SF occurring before week 12. A hypothetical strategy will be used to address death as few deaths are expected up to week 12 for both linvoseltamab and EPd.

Details of the analysis including analyses for missing data, subgroup analyses (eg, patients without pain at baseline, comorbidities) and other supportive analyses addressing potential confounders

VV-RIM-00312509-1.0 Approved - 18 Aug 2023 GMT-5:00

(eg, adjustment for baseline peripheral neuropathy), where appropriate, will be further specified in the Statistical Analysis Plan. Additional supplemental analyses on the pain key secondary endpoint using missing not at random (MNAR) assumptions will be outlined within a separate supplemental PRO Statistical Analysis Plan.

A 2-point change in BPI-SF Item 3 (on an 11-point scale) has been established in breast cancer (Mathias, 2011) and prostate cancer (Fizazi, 2019), and recently suggested in RRMM (Cella, 2018), as a clinically meaningful threshold for pain within individual patients.

Analgesic use will be assessed based on an 8-point scale modified from the analgesic quantification algorithm (Chung, 2014). See Appendix 5 for the pain medication algorithm. An increase in analgesic use is defined as a 2-point increase from the baseline in the modified AQA score.

As previously described, a composite strategy will be employed to account for increases in analgesic use with BPI-SF Item 3. For participants who report an increase in analgesic use at an assessment timepoint, a penalty will be applied to their observed BPI-SF Item 3 score. Patients with an increase in analgesic use at timepoint X will have their observed BPI-SF Item 3 score for that timepoint replaced with either: (a) (their baseline pain score), if that baseline value is ≥2 points worse (representing more pain) than their observed pain score at timepoint X, or (b) (their observed pain score at timepoint X + 2 points), if their observed pain score at time X is worse than or the same as their baseline. The 2-point penalty was selected as this represents a clinically meaningful threshold for pain as explained above. Sensitivity analyses using other thresholds, eg, 1-point, derived meaningful thresholds for BPI-SF Item 3 based on patient interview study or anchor-based approach, will be performed.

Finally, change from baseline to week 12 in worst pain score per BPI-SF Item 3 will be analyzed using analysis of covariance (ANCOVA) to evaluate differences in changes from baseline between treatment arms. Pain PRO will be analyzed in participants who have been previously exposed to CD38 antibodies and in all study participants separately.

11.4.3.2.2. Other Secondary Analyses

11.4.3.2.2.1. Duration of Response

Duration of response (DOR) (per IRC or per investigator) is defined for responders (participants with a best overall response of PR or above) only. It is the time from the date of the first documented response (PR or above) until the date of first documented disease progression, or death due to any cause, whichever occurs first. For participants who neither progress nor die, the DOR will be censored at the same time as they were censored for the primary PFS.

DOR for each treatment arm will be estimated using the Kaplan-Meier Method, if applicable. Median DOR and its corresponding 95% CI will be reported. DOR will be assessed in the subset of subjects of the FAS who achieve objective response by the IMWG criteria (per IRC or per investigator) and will not be formally statistically compared between treatment arms.

DOR will be summarized by treatment arm in participants who have been previously exposed to CD38 antibodies and in all study participants separately.

VV-RIM-00312509-1.0 Approved - 18 Aug 2023 GMT-5:00

11.4.4. Control of Multiplicity

A hierarchical testing plan will be used to strictly control the family wise Type I error rate at the 2-sided 5% level. PFS in study participants who have been previously exposed to CD38 antibodies will be tested first at a 2-sided Type I error of 0.05. If it is significant, the key secondary endpoints as listed below will be tested sequentially in the following prespecified order with overall 2-sided Type I error of 0.05. In other words, a key secondary endpoint may be formally tested once all endpoints listed above it achieve statistical significance with the pain PRO endpoint in all study participants to be tested at the end of the sequence.

In participants who have previously received CD38 antibodies:

- ORR per IMWG criteria determined by an IRC
- Rate of VGPR or better response per IMWG criteria determined by an IRC
- Rate of CR or better response per IMWG criteria determined by an IRC
- Rate of MRD negativity

In all study participants:

- PFS
- ORR per IMWG criteria determined by an IRC
- Rate of VGPR or better response per IMWG criteria determined by an IRC
- Rate of CR or better response per IMWG criteria determined by an IRC
- Rate of MRD negativity

In participants who have previously received CD38 antibodies and in all study participants sequentially:

- OS in participants who have previously received CD38 antibodies
- OS in all study participants
- Pain PRO in participants who have previously received CD38 antibodies
- Pain PRO in all study participants

The primary PFS analysis, in participants who have been previously exposed to CD38 antibodies, has no planned interim look. For the secondary analyses, to control for multiplicity due to interim analyses of PFS and OS and strictly control the overall Type I error at the 2-sided 5% level, appropriate alpha-spending function based on the estimated information fraction at the time of each interim analysis (= observed number of events at the interim analysis / total number of events planned for the primary analysis of the endpoint) will be used. For interim analyses of PFS in all study participants, Lan-DeMets approximation to O'Brien Fleming spending function will be used. The boundaries at possible timepoints for analyses of PFS along with the minimum detectable difference in median PFS and maximum detectable HR for PFS are shown in Table 19.

VV-RIM-00312509-1.0 Approved - 18 Aug 2023 GMT-5:00

Table 19: Details of the Interim and Final PFS Analyses in All Study Participants

Analysis Name	Expected Number of Events	Expected Information Fraction	Expected Minimum Detectable Difference in Median PFS	Expected Maximum Detectable HR	Expected Alpha Allocation
Interim Analysis*	171	87%	2.7 months	0.721	0.033
Final Analysis	196	100%	2.4 months	0.747	0.041

*IA will be conducted at the same time as the PFS analysis for participants previously exposed to CD38 antibodies and the final analysis will be conducted after approximately 196 events. The alpha allocation will be determined using the Lan-DeMets approximation of the O'Brien Fleming boundary, based on the observed number of events.

For interim analyses of OS in participants previously exposed to CD38 antibodies and in all study participants, separate alpha-spending functions of the Gamma family with $\gamma = -2$ along with the minimum detectable differences for OS are detailed in Table 20 and Table 21. See Section 11.5 for details on the timing of interim analyses for OS.

Table 20: Details of the Interim and Final OS Analyses in Participants Previously Exposed to CD38 Antibodies

Analysis Name	Expected Number of Events	Expected Information Fraction	Expected Minimum Detectable Difference in Median OS	Expected Maximum Detectable HR	Expected Alpha Allocation
Interim Analysis 1*	67	44%	20.7 months	0.537	0.011
Interim Analysis 2*	88	57%	17.5 months	0.578	0.011
Final Analysis	153	100%	9.4 months	0.719	0.041

*IA1 will be conducted at the same time as the PFS analysis for participants previously exposed to CD38 antibodies, IA2 will be conducted at the same time as the PFS FA for all study participants and the final OS analysis will be conducted after approximately153 events. The alpha allocation will be determined using an alpha-spending function of the Gamma family with $\gamma = -2$, based on the observed number of events

Table 21: Details of the Interim and Final OS Analyses in All Study Participants

Analysis Name	Expected Number of Events	Expected Information Fraction	Expected Minimum Detectable Difference in Median OS	Expected Maximum Detectable HR	Expected Alpha Allocation
Interim Analysis 1*	70	40%	20.6 months	0.538	0.01
Interim Analysis 2*	95	54%	16.7 months	0.589	0.01
Final Analysis	176	100%	8.7 months	0.735	0.042

*IA1 will be conducted at the same time as the PFS analysis for participants previously exposed to CD38 antibodies, IA2 will be conducted at the same time as the PFS FA for all study participants and the final OS analysis will be conducted after approximately 176 events. The alpha allocation will be determined using an alpha-spending function of the Gamma family with $\gamma = -2$, based on the observed number of events.

For all other endpoints in the hierarchy (ie, ORR, >=VGPR, >=CR, MRD and PRO Pain), no interim analysis is planned. Only one test of statistical significance will be performed at the

VV-RIM-00312509-1.0 Approved - 18 Aug 2023 GMT-5:00

2-sided 5% level of significance whenever the PFS comparison in the corresponding population is significant.

11.4.5. Safety Analysis

11.4.5.1. Adverse Events

Definitions

For safety variables, the following observation periods are defined:

- The pretreatment period is defined as the time from signing the ICF to before the first dose of study drug.
- The on-treatment period is defined as the day from first dose of study drug to the last dose of study drug plus 90 days, or on the day prior to the start of a new treatment for MM, whichever is earlier.
- The posttreatment period begins after the on-treatment period.

Treatment-emergent adverse events are defined as those that are not present at baseline or represent the exacerbation of a pre-existing condition during the on-treatment period. Adverse event analysis will be based on TEAEs.

Analysis

Summaries of all TEAEs by treatment group will include:

- The number (n) and percentage (%) of participants with at least 1 TEAE by SOC and PT
- TEAEs by severity (according to the grading scale outlined in Section 10.2.5), presented by System Organ Class (SOC) and Preferred term (PT)
- TEAEs, presented by SOC and PT
- Treatment-emergent AESIs
- Treatment-emergent adverse events leading to permanent treatment discontinuation will be listed and summarized by treatment group.

11.4.5.2. Other Safety

Vital Signs

Vital signs (temperature, pulse, blood pressure, pulse oximetry [on dosing days] and respiration rate) will be summarized by baseline and change from baseline to each scheduled assessment time with descriptive statistics.

Laboratory Tests

Laboratory test results will be summarized. Shift tables, based on baseline normal/abnormal and other tabular and graphical methods, may be used to present the results for laboratory tests of interest.

VV-RIM-00312509-1.0 Approved - 18 Aug 2023 GMT-5:00

11.4.5.3. Treatment Exposure

Treatment duration and dose intensity will be summarized.

11.4.5.4. Treatment Compliance

Participants in the EPd arm will be asked to complete a pomalidomide and dexamethasone dosing log to determine treatment compliance.

11.4.6. Pharmacokinetics

11.4.6.1. Analysis of Drug Concentration Data

The PK parameters may include, but are not limited to:

- Maximum (peak) concentration (C_{max})
- Concentration at the EOI (C_{eoi})
- Lowest concentration in a dosing interval (C_{trough})

The concentrations of linvoseltamab over time and selected pharmacokinetic parameters will be summarized by descriptive statistics for each cohort for the purpose of estimating exposures in these groups. This descriptive statistical assessment will include the geometric means and ratios of the geometric means for selected PK parameters, as deemed appropriate.

No formal statistical hypothesis testing will be performed.

11.4.7. Analysis of Immunogenicity Data

Immunogenicity will be characterized by the linvoseltamab ADA status, ADA category, maximum titer, and NAb response observed in participants in the ADA analysis set.

11.4.7.1. Analysis of Antidrug Antibody Status

For samples confirmed as drug specific ADA-positive, but found negative at the lowest titer dilution, the lowest dilution in the titer assay is imputed.

The ADA status of each participant may be classified as one of the following:

- Negative: if all samples are found to be negative in the ADA assay
- Pre-existing immunoreactivity, defined as a positive ADA assay response at baseline, with all post-dose ADA results negative, or a positive assay response at baseline, with all post-dose ADA assay responses less than 9-fold over baseline titer levels
- Treatment-emergent ADA response, defined as any post-dose positive ADA assay response when the baseline results are negative
- Treatment-emergent ADA response may be further characterized as persistent, transient, or indeterminate
- Treatment boosted ADA response, defined as any post-dose positive ADA assay response that is 9-fold over baseline titer levels when baseline is positive in the ADA assay

VV-RIM-00312509-1.0 Approved - 18 Aug 2023 GMT-5:00

- Maximum ADA titer values are classified as follows:
  - Low (titer <1,000)
  - Moderate (1,000 ≤ titer ≤10,000)
  - High (titer >10,000)

11.4.7.2. Analysis of Neutralizing Antibody Data

NAb status is categorized as follows:

- Negative: samples tested negative in the ADA assay, or samples positive in the ADA assay but tested negative in the NAb assay.
- Positive: samples tested positive in the NAb assay

Listings of pre-existing, treatment-boosted, and treatment-emergent ADA responses, ADA titers and NAb positivity presented by participant, time point, and dose cohort/group will be provided. Incidence of treatment-emergent ADA and NAb will be assessed as absolute occurrence (N) and percent of participants (%), grouped by study cohorts and ADA titer level.

Plots of drug concentrations will be examined and the influence of ADAs and NAbs on individual PK profiles evaluated. Assessment of impact of ADA and NAbs on safety and efficacy may be provided.

11.4.8. Analysis of Pharmacodynamic and Exploratory Biomarker Data

The following variables will be explored:

Analysis of sBCMA at baseline (by medians, quantiles such as tertiles) will be analyzed descriptively as subgroups relating to IMWG response.

Bone marrow T-cell and NK percentages and activation markers (CD69 and CD25) will be described at baseline and at suspected PR or CR.

Additional exploratory biomarkers such as BCMA expression in bone marrow by IHC, changes in circulating B cells, monocytes and other phenotypic may be described in a separate report.

11.4.9. Analysis of Quality of Life Data

PRO instruments will be scored according to their respective scoring manuals and user's guides.

Patient disposition and PRO completion rates will be summarized by visit.

Summary statistics of absolute scores and change from baseline by visit will be reported for each scale/subscale of all PRO instruments. Line charts depicting the mean and mean change from baseline will be provided.

Change from baseline in worst pain per BPI-SF Item 3 and other PRO scales will be analyzed using Mixed-Effects Model for Repeated Measures (MMRM).

Proportion of participants reported having PRO-CTCAE (5 symptomatic toxicities including fatigue, dyspnea, nausea, sensory neuropathy, diarrhea) by treatment arm will be calculated.

VV-RIM-00312509-1.0 Approved - 18 Aug 2023 GMT-5:00

Overall treatment side effect per FACIT GP5 by treatment arm will be summarized.

11.5. Interim Analysis

For the PFS analysis in all study participants, one interim analysis of PFS data is planned at the time when primary PFS analysis is conducted.

It is expected to occur after 171 PFS events have been observed on study in both arms among all study participants, representing approximately 87% of the events needed for the final analysis of PFS in this population, or 100 PFS events have been observed in control arm alone.

Two interim analyses of OS will be performed separately in study participants who have previously been exposed to CD38 antibodies and in all study participants:

- The first interim analysis of OS will be performed at the time of the primary analysis of PFS in participants previously exposed to CD38 antibodies. It is estimated that 67 deaths (representing approximately 44% information fraction) will be observed among prior CD38 antibody exposed participants, and 70 deaths (representing approximately 40% information fraction) will be observed in all participants at the time of this analysis.
- The second interim analysis of OS will be performed at the time of the primary analysis of PFS in all study participants. It is estimated that 88 deaths (representing approximately 57% information fraction) will be observed in prior CD38 antibody-exposed participants, and 95 deaths (representing approximately 54% information fraction) will be observed in all participants at the time of this analysis.

If OS is formally tested, an alpha-spending function of the Gamma family with $\gamma = -2$, based on the observed number of events at the interim analyses, will be used to strictly control the overall Type I error at the 2-sided 5% level.

If PFS in the study participants exposed to CD38 antibodies matures at the same time as the overall PFS in all study participants, then only one PFS analysis will be conducted. In this case, the interim PFS analysis in all study participants will not be performed. Additionally, only one OS interim analysis will be performed at the same time as the PFS analysis.

If the study is terminated prematurely, only those parameters required for the development program and/or reporting to regulatory authorities will be summarized. Investigator and sponsor responsibilities surrounding the premature termination of a study are presented in Section 15.1.

VV-RIM-00312509-1.0 Approved - 18 Aug 2023 GMT-5:00

12. QUALITY CONTROL AND QUALITY ASSURANCE

In accordance with ICH E6, the sponsor is responsible for quality assurance to ensure that the study is conducted and the data generated, recorded, and reported in compliance with the protocol, GCP, and any applicable regulatory requirement(s). The planned quality assurance and quality control procedures for the study are described in this section.

12.1. Data Management and Electronic Systems

12.1.1. Data Management

A data management plan specifying all relevant aspects of data processing for the study (including data validation [quality-checking], cleaning, correcting, releasing) will be maintained and stored at Regeneron (Sponsor).

Adverse events and medical history will be coded using MedDRA. A medical coding plan will specify the processes and the dictionary used for coding. All data coding (eg, AEs, baseline findings, medication, medical history/surgical history/oncologic history) will be done using internationally recognized and accepted dictionaries.

The CRF data for this study will be collected with an EDC.

12.1.2. Electronic Systems

Electronic systems that may be used to process and/or collect data in this study will include the following:

- IRT system – randomization, study drug supply
- EDC system – data capture – Medidata Rave
- Statistical Analysis System (SAS) – statistical review and analysis
- Central imaging data capture
- eCOA – patient reported outcomes
- Pharmacovigilance safety database

12.2. Study Monitoring

12.2.1. Monitoring of Study Sites

Regeneron uses a study-specific risk-based approach to study monitoring and oversight, aligned with risk-based quality principles, outlined in ICH E6 (R2) Guideline for Good Clinical Practice. Risk-Based Quality Management (RBQM) methodology focuses on employing a fit-for-purpose monitoring strategy, supported either directly by Regeneron as sponsor, or via our CRO partners. RBQM strategies may include: reduced source data verification (SDV), targeted source data review (SDR), the use of onsite and remote monitoring visits (as allowed by local laws), and Centralized Monitoring to identify site level risks and study level trends. The investigator must allow study-related monitoring activities to occur.

VV-RIM-00312509-1.0 Approved - 18 Aug 2023 GMT-5:00

The study monitor and/or designee (eg, contract research organization [CRO] monitor) will visit each site prior to enrollment of the first participant, and periodically during the study. This study will use the principles of risk-based monitoring (ICH). This means that the number of visits for any given site may vary based on site risk indicators. The investigator must allow study-related monitoring.

The study monitors may perform targeted SDR to verify that data recorded in the CRF by authorized site personnel are accurate and verifiable from source documents, that the safety and rights of participants are being protected, and that the study is being conducted in accordance with the current approved protocol version and any other study agreements, ICH GCP, and all applicable regulatory requirements.

12.2.2. Source Document Requirements

Investigators are required to prepare and maintain adequate and accurate patient records (source documents). The site is responsible to ensure quality within their records and systems and are accountable for ensuring that all source data and CRF data are timely, accurate and complete. Please note that eCRF will be the source for ethnic origin collection.

The investigator must keep all source documents on file with the CRF (throughout this protocol, CRF refers to either a paper CRF or an electronic CRF). Case report forms and source documents must be available at all times for inspection by authorized representatives of the sponsor and regulatory authorities.

12.2.3. Case Report Form Requirements

Study data obtained in the course of the clinical study will be recorded on electronic Case Report Forms (CRFs) within the EDC system by trained site personnel. All required CRFs must be completed for each and every participant enrolled in the study. The investigator must ensure the accuracy, completeness, and timeliness of the data reported to the sponsor in the CRFs. After review of the clinical data for each participant, the investigator must provide an electronic signature. A copy of each participant CRF casebook is to be retained by the investigator as part of the study record and must be available at all times for inspection by authorized representatives of the sponsor and regulatory authorities.

Corrections to the CRF will be entered in the CRF by the investigator or an authorized designee. All changes, including date and person performing corrections, will be available via the audit trail, which is part of the EDC system. For corrections made via data queries, a reason for any alteration must be provided.

12.3. Audits and Inspections

This study may be subject to a quality assurance audit or inspection by the sponsor or regulatory authorities. Should this occur, the investigator is responsible for:

- Informing the sponsor of a planned inspection by the authorities as soon as notification is received, and authorizing the sponsor’s participation in the inspection
- Providing access to all necessary facilities, study data, and documents for the inspection or audit

VV-RIM-00312509-1.0 Approved - 18 Aug 2023 GMT-5:00

- Communicating any information arising from inspection by the regulatory authorities to the sponsor immediately
- Taking all appropriate measures requested by the sponsor to resolve the problems found during the audit or inspection

Documents subject to audit or inspection include but are not limited to all source documents, CRFs, medical records, correspondence, ICFs, IRB/EC files, documentation of certification and quality control of supporting laboratories, and records relevant to the study maintained in any supporting pharmacy facilities. Conditions of study material storage are also subject to inspection. In addition, representatives of the sponsor may observe the conduct of any aspect of the clinical study or its supporting activities both within and outside of the investigator's institution.

In all instances, the confidentiality of the data must be respected.

12.4. Study Documentation

12.4.1. Certification of Accuracy of Data

A declaration assuring the accuracy and content of the data recorded on the eCRF must be signed electronically by the investigator. This signed declaration accompanies each set of participant final eCRF that will be provided to the sponsor.

12.4.2. Retention of Records

The investigator must retain all essential study documents, including ICFs, source documents, investigator copies of CRFs, and drug accountability records for at least 15 years following the completion or discontinuation of the study, or longer, if a longer period is required by relevant regulatory authorities. (Note: under EU CTR, the sponsor should archive the content of the Clinical Trial Master File for at least 25 years after the end of the clinical trial, unless other Union law requires archiving for longer). The investigator must obtain written approval from the sponsor before discarding or destroying any essential study documents during the retention period following study completion or discontinuation. Records must be destroyed in a manner that ensures confidentiality.

If the investigator's personal situation is such that archiving can no longer be ensured, the investigator must inform the sponsor (written notification) and the relevant records will be transferred to a mutually agreed-upon destination.

12.4.3. Recruitment Strategy

Potential study participants may be identified by the investigator through a variety of means, such as publicizing the trial or using existing patient lists. Recruitment resources may include, but are not limited to, recruitment flyers, brochures, social media ads, newspaper ads, radio ads, etc. A third party vendor may assist in recruitment efforts, such as the development of recruitment materials. All patient-facing recruitment material, including media advertising and receptionist scripts, will be reviewed and approved by the appropriate IRB/EC/authority prior to use. Resources may be in paper or electronic form. Regeneron will not access any patient identifiable information as part of recruitment efforts.

VV-RIM-00312509-1.0 Approved - 18 Aug 2023 GMT-5:00

12.4.4. Data Protection

- Participants will be assigned a unique identifier by the sponsor. Any participant records or datasets that are transferred to the sponsor will contain the identifier only; participant names or any information which would make the participant identifiable will not be transferred.
- The participant must be informed that their personal study-related data will be used by the sponsor in accordance with local data protection law. The level of disclosure must also be explained to the participant who will be required to give consent for their data to be used as described in the informed consent.
- The participant must be informed that their medical records may be examined by Clinical Quality Assurance auditors or other authorized personnel appointed by the sponsor, [by appropriate IRB/IEC members,] and by inspectors from regulatory authorities.
- The contract between sponsor and study sites specifies responsibilities of the parties related data protection, including handling of data security breaches and respective communication and cooperation of the parties.
- Information technology systems used to collect, process, and store study-related data are secured by technical and organizational security measures designed to protect such data against accidental or unlawful loss, alteration, or unauthorized disclosure or access.

VV-RIM-00312509-1.0 Approved - 18 Aug 2023 GMT-5:00

13. ETHICAL AND REGULATORY CONSIDERATIONS

13.1. Good Clinical Practice Statement

It is the responsibility of both the sponsor and the investigator(s) to ensure that this clinical study will be conducted in accordance with the ethical principles that have their origin in the Declaration of Helsinki, and that are consistent with the ICH guidelines for GCP and applicable regulatory requirements.

13.2. Informed Consent

The principles of informed consent are described in ICH guidelines for GCP.

The ICF used by the investigator must be reviewed and approved by the sponsor prior to submission to the appropriate IRB/EC. A copy of the IRB/EC -approved ICF and documentation of approval must be provided to the sponsor before study drug will be shipped to the study site.

It is the responsibility of the investigator or designee (if acceptable by local regulations) to obtain written informed consent from each participant prior to his/her participation in the study and after the aims, methods, objectives, and potential hazards of the study have been explained to the participant in language that he/she can understand. The ICF should be signed and dated by the participant and by the investigator or authorized designee who reviewed the ICF with the participant.

- Participants who can write but cannot read will have the ICF read to them before signing and dating the ICF.
- Participants who can understand but who can neither write nor read will have the ICF read to them in presence of an impartial witness, who will sign and date the ICF to confirm that informed consent was given.

The original ICF must be retained by the investigator as part of the participant’s study record, and a copy of the signed ICF must be given to the participant.

If new safety information results in significant changes in the risk/benefit assessment, or if there are significant changes to the study procedures, the ICF must be reviewed and updated appropriately. All study participants must be informed of the new information and provide their written consent if they wish to continue in the study. The original signed revised ICF must be maintained in the participant’s study record and a copy must be given to the participant.

13.3. Participants Confidentiality and Data Protection

The investigator must take all appropriate measures to ensure that the anonymity of each study participant will be maintained. Participants should be identified by a participant identification number only, on CRFs or other documents submitted to the sponsor. Documents that will not be submitted to the sponsor (eg, signed ICF) must be kept in strict confidence.

The participant’s and investigator's personal data, which may be included in the sponsor database, will be treated in compliance with all applicable laws and regulations. The sponsor shall take all appropriate measures to safeguard and prevent access to this data by any unauthorized third party.

VV-RIM-00312509-1.0 Approved - 18 Aug 2023 GMT-5:00

13.4. Institutional Review Board/Ethics Committee

An appropriately constituted IRB/EC, as described in ICH guidelines for GCP, must review and approve:

- The protocol, ICF, and any other materials to be provided to the participants (eg, advertising) before any participant may be enrolled in the study
- Any amendment or modification to the study protocol or ICF before implementation, unless the change is necessary to eliminate an immediate hazard to the participant, in which case the IRB/EC should be informed as soon as possible
- Ongoing studies on an annual basis or at intervals appropriate to the degree of risk

In addition, the IRB/EC should be informed of any event likely to affect the safety of participants or the continued conduct of the clinical study.

A copy of the IRB/EC approval letter with a current list of the IRB/EC members and their functions must be received by the sponsor prior to shipment of drug supplies to the investigator. The approval letter should include the study number and title, the documents reviewed, and the date of the review.

Records of the IRB/EC review and approval of all study documents (including approval of ongoing studies) must be kept on file by the investigator.

13.5. Clinical Study Data Transparency

Final study results will be published on a public clinical trial registries according to applicable local guidelines and regulations. For data integrity, scientific, and statistical reasons, published results from all participants will be disclosed following End of Study (Section 6.1.2).

Treatment codes will be disseminated to each investigation site thereafter.

For purposes of data disclosure, interim analyses will be available for disclosure when required by local regulations. If the integrity of the ongoing study cannot be ensured or study blinding cannot be maintained, then only final results will be disclosed.

VV-RIM-00312509-1.0 Approved - 18 Aug 2023 GMT-5:00

14. PROTOCOL AMENDMENTS

The sponsor may not implement a change in the design of the protocol or ICF without an IRB/EC-approved amendment. Where required per local legislation, regulatory authority approval will also be sought.

VV-RIM-00312509-1.0 Approved - 18 Aug 2023 GMT-5:00

15. PREMATURE TERMINATION OF THE STUDY OR CLOSE-OUT OF A SITE

15.1. Premature Termination of the Study

The sponsor has the right to terminate the study prematurely. Reasons may include efficacy, safety, or futility, among others. Should the sponsor decide to terminate the study, the investigator(s) will be notified in writing.

15.2. Close-out of a Site

The sponsor and the investigator have the right to close-out a site prematurely.

Investigator's Decision

The investigator must notify the sponsor of a desire to close-out a site in writing, providing at least 30 days' notice. The final decision should be made through mutual agreement with the sponsor. Both parties will arrange the close-out procedures after review and consultation.

Sponsor's Decision

The sponsor will notify the investigator(s) of a decision to close-out a study site in writing. Reasons may include the following, among others:

- The investigator has received all items and information necessary to perform the study, but has not enrolled any participant within a reasonable period of time
- The investigator has violated any fundamental obligation in the study agreement, including but not limited to, breach of this protocol (and any applicable amendments), breach of the applicable laws and regulations, or breach of any applicable ICH guidelines
- The total number of participants required for the study are enrolled earlier than expected

In all cases, the appropriate IRB/EC and Health Authorities must be informed according to applicable regulatory requirements, and adequate consideration must be given to the protection of the participants' interests.

16. CONFIDENTIALITY

Confidentiality of information is provided as a separate agreement.

17. FINANCING AND INSURANCE

Financing and insurance information is provided as a separate agreement.

18. PUBLICATION POLICY

Publication rights and procedures will be outlined in a separate clinical study agreement.

VV-RIM-00312509-1.0 Approved - 18 Aug 2023 GMT-5:00

19. REFERENCES

Aaronson NK, Ahmedzai S, Bergman B, Bullinger M, Cull A, Duez NJ, et al. The European Organization for Research and Treatment of Cancer QLQ-C30: a quality-of-life instrument for use in international clinical trials in oncology. J Natl Cancer Inst 1993; 85(5):365-376.

Abecma [Package Insert]. Celgene Corporation, a Bristol-Myers Squibb Company, Summit, NJ.

Ailawadhi S, Parrondo R, Laplant B, Alegria V, Elliott5 J, Sher T, et al. 1938 Phase II Trial of Elotuzumab with Pomalidomide and Dexamethasone for Relapsed/Refractory Multiple Myeloma (RRMM) in the Post-Daratumumab Progression Setting. Presented at: American Society of Hematology Annual Meeting; 2021, 2022a;

Ailawadhi S, Parrondo RD, Laplant B, Alegria VR, Elliott JB, Sher T, et al. Phase II Trial of Elotuzumab with Pomalidomide and Dexamethasone for Relapsed/Refractory Multiple Myeloma (RRMM) in the Post-Daratumumab Progression Setting. Blood 2022b; 140(Supplement 1):4450-4451.

American Cancer Society. Key Statistics About Multiple Myeloma. https://www.cancer.org/cancer/multiple-myeloma/about/key-statistics.html. Published 2021. Updated 12 Jan 2021. Accessed 04 Jul 2021.

Atkinson TM, Mendoza TR, Sit L, Passik S, Scher HI, Cleeland C, et al. The Brief Pain Inventory and its "pain at its worst in the last 24 hours" item: clinical trial endpoint considerations. Pain Med 2010; 11(3):337-346.

Attal M, Richardson PG, Rajkumar SV, San-Miguel J, Beksac M, Spicka I, et al. Isatuximab plus pomalidomide and low-dose dexamethasone versus pomalidomide and low-dose dexamethasone in patients with relapsed and refractory multiple myeloma (ICARIA-MM): a randomised, multicentre, open-label, phase 3 study. Lancet 2019; 394(10214):2096-2107.

Bansal R, Rakshit S,Kumar S. Extramedullary disease in multiple myeloma. Blood Cancer Journal 2021; 11(9):161.

Becnel MR, Horowitz SB, Thomas SK, Iyer SP, Patel KK, Manasanch EE, et al. Descriptive Analysis of Isatuximab Use Following Prior Daratumumab in Patients with Relapsed/Refractory Multiple Myeloma. Blood 2020; 136(Supplement 1):20-21.

Becnel MR, Rubin ML, Nair R, Manasanch EE, Lee HC, Patel KK, et al. Effect of Timing of Monoclonal Antibody Therapy on the Time to Next Treatment and Response Rate in Heavily Pre-Treated Patients with Myeloma Who Separately Received Both Daratumumab and Elotuzumab-Based Regimens. Blood 2018; 132(Supplement 1):3258-3258.

Boland E, Eiser C, Ezaydi Y, Greenfield DM, Ahmedzai SH,Snowden JA. Living with advanced but stable multiple myeloma: a study of the symptom burden and cumulative effects of disease and intensive (hematopoietic stem cell transplant-based) treatment on health-related quality of life. J Pain Symptom Manage 2013; 46(5):671-680.

VV-RIM-00312509-1.0 Approved - 18 Aug 2023 GMT-5:00

Brudno JN,Kochenderfer JN. Toxicities of chimeric antigen receptor T cells: recognition and management. Blood 2016; 127(26):3321-3330.

Carvykti [Package Insert]. Janssen Biotech, Inc, Horsham, PA.

Carvykti [Summary of Product Characteristics]. Janssen-Cilag International NV, Beerse, Belgium.

Casneuf T, Xu XS, Adams HC, 3rd, Axel AE, Chiu C, Khan I, et al. Effects of daratumumab on natural killer cells and impact on clinical outcomes in relapsed or refractory multiple myeloma. Blood Adv 2017; 1(23):2105-2114.

Cella D, Beaumont JL, Hudgens S, Marteau F, Feuilly M, Houchard A, et al. Relationship Between Symptoms and Health-related Quality-of-life Benefits in Patients With Carcinoid Syndrome: Post Hoc Analyses From TELESTAR. Clin Ther 2018; 40(12):2006-2020.e2002.

Chari A, Suvannasankha A, Fay JW, Arnulf B, Kaufman JL, Ifthikharuddin JJ, et al. Daratumumab plus pomalidomide and dexamethasone in relapsed and/or refractory multiple myeloma. Blood 2017; 130(8):974-981.

Chung KC, Barlev A, Braun AH, Qian Y,Zagari M. Assessing analgesic use in patients with advanced cancer: development of a new scale--the Analgesic Quantification Algorithm. Pain Med 2014; 15(2):225-232.

Cleeland CS,Ryan KM. Pain assessment: global use of the Brief Pain Inventory. Ann Acad Med Singap 1994; 23(2):129-138.

Cocks K, Cohen D, Wisloff F, Sezer O, Lee S, Hippe E, et al. An international field study of the reliability and validity of a disease-specific questionnaire module (the QLQ-MY20) in assessing the quality of life of patients with multiple myeloma. Eur J Cancer 2007; 43(11):1670-1678.

Courville EL, Yohe S, Shivers P,Linden MA. VS38 Identifies Myeloma Cells With Dim CD38 Expression and Plasma Cells Following Daratumumab Therapy, Which Interferes With CD38 Detection for 4 to 6 Months. Am J Clin Pathol 2020; 153(2):221-228.

Davila ML, Riviere I, Wang X, Bartido S, Park J, Curran K, et al. Efficacy and toxicity management of 19-28z CAR T cell therapy in B cell acute lymphoblastic leukemia. Sci Transl Med 2014; 6(224):224ra225.

Decadron [USP]. 2004; Whitehouse Station, NJ.

Decaux O, Lafore R, Iaquinta D, Tekle C,Leleu X. Isatuximab Plus Pomalidomide and Dexamethasone in Patients with Relapsed and/or Refractory Multiple Myeloma in Real-Life Context in France: IMAGE Subgroup Analysis Based on Prior Lines of Therapy and Refractory Status. Blood 2022; 140(Supplement 1):10969-10970.

VV-RIM-00312509-1.0 Approved - 18 Aug 2023 GMT-5:00

Dimopoulos M, Quach H, Mateos MV, Landgren O, Leleu X, Siegel D, et al. Carfilzomib, dexamethasone, and daratumumab versus carfilzomib and dexamethasone for patients with relapsed or refractory multiple myeloma (CANDOR): results from a randomised, multicentre, open-label, phase 3 study. Lancet 2020; 396(10245):186-197.

Dimopoulos MA, Dytfeld D, Grosicki S, Moreau P, Takezako N, Hori M, et al. Elotuzumab plus Pomalidomide and Dexamethasone for Multiple Myeloma. N Engl J Med 2018; 379(19):1811-1822.

Dimopoulos MA, Moreau P, Terpos E, Mateos MV, Zweegman S, Cook G, et al. Multiple myeloma: EHA-ESMO Clinical Practice Guidelines for diagnosis, treatment and follow-up(†). Ann Oncol 2021; 32(3):309-322.

Dimopoulos MA, Oriol A, Nahi H, San-Miguel J, Bahlis NJ, Usmani SZ, et al. Daratumumab, Lenalidomide, and Dexamethasone for Multiple Myeloma. N Engl J Med 2016a; 375(14):1319-1331.

Dimopoulos MA, Palumbo A, Corradini P, Cavo M, Delforge M, Di Raimondo F, et al. Safety and efficacy of pomalidomide plus low-dose dexamethasone in STRATUS (MM-010): a phase 3b study in refractory multiple myeloma. Blood 2016b; 128(4):497-503.

Doessegger L,Banholzer ML. Clinical development methodology for infusion-related reactions with monoclonal antibodies. Clin Transl Immunology 2015; 4(7):e39.

Empliciti (elotuzumab) [Package Insert]. Bristol-Myers Squibb Company, Princeton, NJ.

Empliciti [Summary of Product Characteristics]. Bristol Myers Squibb Pharmaceuticals Ltd, Buckinghamshire, United Kingdom.

EuroQol. EQ-5D-5L. EuroQol Group. https://euroqol.org/eq-5d-instruments/eq-5d-5l-about/. Published 2017. Updated 18 Apr 2017.

Fayers P, Aaronson N, Bjordal K, Groenvold M, Curran D,Bottomley A. *EORTC QLQ-C30 Scoring Manual. (3rd ed.) European Organisation for Research and Treatment of Cancer.* 3rd ed. Brussels: European Organisation for Research and Treatment of Cancer; 2001.

FDA. Core Patient-Reported Outcomes in Cancer Clinical Trials, Draft Guidance for Industry, June 2021. 2021; Oncology Center of Excellence CfBEaR, Center for Drug Evaluation and Research, editor.

FDA. Guidance for Industry Drug-Induced Liver Injury: Premarketing Clinical Evaluation, Final. https://www.fda.gov/downloads/Drugs/GuidanceComplianceRegulatoryInformation/Guidances/UCM174090.pdf. Published 2009. Accessed 10 Sept 2018.

VV-RIM-00312509-1.0 Approved - 18 Aug 2023 GMT-5:00

Fizazi K, Shore N, Tammela TL, Ulys A, Vjaters E, Polyakov S, et al. Darolutamide in Nonmetastatic, Castration-Resistant Prostate Cancer. N Engl J Med 2019; 380(13):1235-1246.

Food and Drug Administration (FDA). Guidance for Industry Patient-Reported Outcome Measures: Use in Medical Product Development to Support Labeling Claims. https://www.fda.gov/media/77832/download. Published 2009. Accessed 12 Oct 2020.

Gandhi UH, Cornell RF, Lakshman A, Gahvari ZJ, McGehee E, Jagosky MH, et al. Outcomes of patients with multiple myeloma refractory to CD38-targeted monoclonal antibody therapy. Leukemia 2019; 33(9):2266-2275.

Gary S, Dias N,Faulkner K. FDA Patient-Focused Drug Development Guidance Update: Incorporating Patient Experience Data in Clinical Trials. Applied Clinical Trials 2020.

Greipp PR, San Miguel J, Durie BG, Crowley JJ, Barlogie B, Bladé J, et al. International staging system for multiple myeloma. J Clin Oncol 2005; 23(15):3412-3420.

Grupp SA, Kalos M, Barrett D, Aplenc R, Porter DL, Rheingold SR, et al. Chimeric antigen receptor-modified T cells for acute lymphoid leukemia. N Engl J Med 2013; 368(16):1509-1518.

Guy W. *ECDEU Assessment Manual for Psychopharmacology*. Rockville, Md: National Institute of Mental Health 1976: 217-222. 313–331.s.

Harousseau JL, Dimopoulos MA, Wang M, Corso A, Chen C, Attal M, et al. Better quality of response to lenalidomide plus dexamethasone is associated with improved clinical outcomes in patients with relapsed or refractory multiple myeloma. Haematologica 2010; 95(10):1738-1744.

Harousseau JL,Moreau P. Autologous hematopoietic stem-cell transplantation for multiple myeloma. N Engl J Med 2009; 360(25):2645-2654.

Hemminki K, Försti A, Houlston R,Sud A. Epidemiology, genetics and treatment of multiple myeloma and precursor diseases. Int J Cancer 2021; 149(12):1980-1996.

Hoylman E, Brown A, Perissinotti AJ, Marini BL, Pianko M, Ye JC, et al. Optimal sequence of daratumumab and elotuzumab in relapsed and refractory multiple myeloma. Leukemia & Lymphoma 2020; 61(3):691-698.

Hulin C, Perrot A, Macro M, Vekhoff A, Leleu X, Karlin L, et al. Retreatment of Patients with Anti CD38-Based Combinations in Multiple Myeloma in Real-Life: Results from the Emmy Cohort Study. Blood 2022; 140(Supplement 1):7133-7135.

Hurst H,Bolton J. Assessing the clinical significance of change scores recorded on subjective outcome measures. J Manipulative Physiol Ther 2004; 27(1):26-35.

Kumar S, Paiva B, Anderson KC, Durie B, Landgren O, Moreau P, et al. International Myeloma Working Group consensus criteria for response and minimal residual disease assessment in multiple myeloma. Lancet Oncol 2016; 17(8):e328-e346.

Kumar SK, D'Souza A, Shah N, Rodriguez C, Voorhees PM, Bueno OF, et al. 900 A Phase 1 First-in-Human Study of Tnb-383B, a BCMA x CD3 Bispecific T-Cell Redirecting Antibody, in Patients with Relapsed/Refractory Multiple Myeloma. 2021; ASH Annual Meeting and Exposition December 13, 2021.

Kvam AK, Wisløff F,Fayers PM. Minimal important differences and response shift in health-related quality of life; a longitudinal study in patients with multiple myeloma. Health Qual Life Outcomes 2010; 8:79.

Lacy MQ, Allred JB, Gertz MA, Hayman SR, Short KD, Buadi F, et al. Pomalidomide plus low-dose dexamethasone in myeloma refractory to both bortezomib and lenalidomide: comparison of 2 dosing strategies in dual-refractory disease. Blood 2011; 118(11):2970-2975.

Lahuerta JJ, Paiva B, Vidriales MB, Cordón L, Cedena MT, Puig N, et al. Depth of Response in Multiple Myeloma: A Pooled Analysis of Three PETHEMA/GEM Clinical Trials. J Clin Oncol 2017; 35(25):2900-2910.

Lee DW, Santomasso BD, Locke FL, Ghobadi A, Turtle CJ, Brudno JN, et al. ASTCT Consensus Grading for Cytokine Release Syndrome and Neurologic Toxicity Associated with Immune Effector Cells. Biol Blood Marrow Transplant 2019; 25(4):625-638.

Lonial S, Lee HC, Badros A, Trudel S, Nooka AK, Chari A, et al. Belantamab mafodotin for relapsed or refractory multiple myeloma (DREAMM-2): a two-arm, randomised, open-label, phase 2 study. Lancet Oncol 2020; 21(2):207-221.

Martinez-Lopez J, Lahuerta JJ, Pepin F, Gonzalez M, Barrio S, Ayala R, et al. Prognostic value of deep sequencing method for minimal residual disease detection in multiple myeloma. Blood 2014; 123(20):3073-3079.

Mathias SD, Crosby RD, Qian Y, Jiang Q, Dansey R,Chung K. Estimating minimally important differences for the worst pain rating of the Brief Pain Inventory-Short Form. J Support Oncol 2011; 9(2):72-78.

Miguel JS, Weisel K, Moreau P, Lacy M, Song K, Delforge M, et al. Pomalidomide plus low-dose dexamethasone versus high-dose dexamethasone alone for patients with relapsed and refractory multiple myeloma (MM-003): a randomised, open-label, phase 3 trial. Lancet Oncol 2013; 14(11):1055-1066.

Mikhael J, Belhadj-Merzoug K, Hulin C, Vincent L, Moreau P, Gasparetto C, et al. A phase 2 study of isatuximab monotherapy in patients with multiple myeloma who are refractory to daratumumab. Blood Cancer J 2021; 11(5):89.

VV-RIM-00312509-1.0 Approved - 18 Aug 2023 GMT-5:00

Mohan M, Becnel MR, Shah UA, Dong H, Gundarlapalli S, Peterson T, et al. Clinical efficacy of sequencing CD38 targeting monoclonal antibodies in relapsed refractory multiple myeloma: A multi-institutional experience. Am J Hematol 2022; 97(7):E276-e280.

Moreau P, Dimopoulos MA, Mikhael J, Yong K, Capra M, Facon T, et al. Isatuximab, carfilzomib, and dexamethasone in relapsed multiple myeloma (IKEMA): a multicentre, open-label, randomised phase 3 trial. Lancet 2021; 397(10292):2361-2371.

Morgan ET. Regulation of cytochrome p450 by inflammatory mediators: why and how? Drug Metab Dispos 2001; 29(3):207-212.

NCCN. NCCN Clinical Practice Guidelines in Oncology: Multiple Myeloma v3.2023. 2023.

Nooka AK, Joseph NS, Kaufman JL, Heffner LT, Gupta VA, Gleason C, et al. Clinical efficacy of daratumumab, pomalidomide, and dexamethasone in patients with relapsed or refractory myeloma: Utility of re-treatment with daratumumab among refractory patients. Cancer 2019; 125(17):2991-3000.

Osoba D, Rodrigues G, Myles J, Zee B,Pater J. Interpreting the significance of changes in health-related quality-of-life scores. J Clin Oncol 1998; 16(1):139-144.

Palumbo A, Chanan-Khan A, Weisel K, Nooka AK, Masszi T, Beksac M, et al. Daratumumab, Bortezomib, and Dexamethasone for Multiple Myeloma. N Engl J Med 2016; 375(8):754-766.

Pomalyst (pomalidomide) [Package Insert]. Celgene Corporation, Summit, NJ.

Raje NS, Anaissie E, Kumar SK, Lonial S, Martin T, Gertz MA, et al. Consensus guidelines and recommendations for infection prevention in multiple myeloma: a report from the International Myeloma Working Group. Lancet Haematol 2022; 9(2):e143-e161.

Rajkumar SV. Treatment of multiple myeloma. Nat Rev Clin Oncol 2011; 8(8):479-491.

Rajkumar SV, Dimopoulos MA, Palumbo A, Blade J, Merlini G, Mateos MV, et al. International Myeloma Working Group updated criteria for the diagnosis of multiple myeloma. Lancet Oncol 2014; 15(12):e538-548.

Ramsenthaler C, Osborne TR, Gao W, Siegert RJ, Edmonds PM, Schey SA, et al. The impact of disease-related symptoms and palliative care concerns on health-related quality of life in multiple myeloma: a multi-centre study. BMC Cancer 2016; 16:427.

Reagan PM,Neelapu SS. How I Manage: Pathophysiology and Management of Toxicity of Chimeric Antigen Receptor T-Cell Therapies. J Clin Oncol 2021; 39(5):456-466.

Richardson PG, Siegel DS, Vij R, Hofmeister CC, Baz R, Jagannath S, et al. Pomalidomide alone or in combination with low-dose dexamethasone in relapsed and refractory multiple myeloma: a randomized phase 2 study. Blood 2014; 123(12):1826-1832.

VV-RIM-00312509-1.0 Approved - 18 Aug 2023 GMT-5:00

Sebag M, Raje NS, Bahlis NJ, Costello C, Dholaria B, Solh M, et al. 895 Elranatamab (PF-06863135), a B-Cell Maturation Antigen (BCMA) Targeted CD3-Engaging Bispecific Molecule, for Patients with Relapsed or Refractory Multiple Myeloma: Results from Magnetismm-1. 2021; ASH Annual Meeting and Exposition December 13, 2021.

Siegel DS, Schiller GJ, Samaras C, Sebag M, Berdeja J, Ganguly S, et al. Pomalidomide, dexamethasone, and daratumumab in relapsed refractory multiple myeloma after lenalidomide treatment. Leukemia 2020; 34(12):3286-3297.

Stead ML, Brown JM, Velikova G, Kaasa S, Wisloff F, Child JA, et al. Development of an EORTC questionnaire module to be used in health-related quality-of-life assessment for patients with multiple myeloma. European Organization for Research and Treatment of Cancer Study Group on Quality of Life. Br J Haematol 1999; 104(3):605-611.

Sully K, Trigg A, Bonner N, Moreno-Koehler A, Trennery C, Shah N, et al. Estimation of minimally important differences and responder definitions for EORTC QLQ-MY20 scores in multiple myeloma patients. Eur J Haematol 2019; 103(5):500-509.

Trask PC, Dueck AC, Piault E,Campbell A. Patient-Reported Outcomes version of the Common Terminology Criteria for Adverse Events: Methods for item selection in industry-sponsored oncology clinical trials. Clin Trials 2018; 15(6):616-623.

Usmani SZ, Garfall AL, van de Donk N, Nahi H, San-Miguel JF, Oriol A, et al. Teclistamab, a B-cell maturation antigen × CD3 bispecific antibody, in patients with relapsed or refractory multiple myeloma (MajesTEC-1): a multicentre, open-label, single-arm, phase 1 study. Lancet 2021; 398(10301):665-674.

van de Donk N, Pawlyn C,Yong KL. Multiple myeloma. Lancet 2021; 397(10272):410-427.

Visram A, Vaxman I, A SAS, Parmar H, Dispenzieri A, Kapoor P, et al. Disease monitoring with quantitative serum IgA levels provides a more reliable response assessment in multiple myeloma patients. Leukemia 2021; 35(5):1428-1437.

Voorhees PM, Kaufman JL, Laubach J, Sborov DW, Reeves B, Rodriguez C, et al. Daratumumab, lenalidomide, bortezomib, and dexamethasone for transplant-eligible newly diagnosed multiple myeloma: the GRIFFIN trial. Blood 2020; 136(8):936-945.

Wilson FP,Berns JS. Tumor lysis syndrome: new challenges and recent advances. Adv Chronic Kidney Dis 2014; 21(1):18-26.

World Health Organziation Web Site. World Health Organization. http://www.who.int/en.

Zonder J, Richter J, Bumma N, Brayer J, Hoffman J, Bensigner W, et al. Early, deep, and durable responses, and low rates of cytokine release syndrome with REGN5458, a BCMAxCD3 bispecific monoclonal antibody, in a phase 1/2 first-in-human study in patients with relapsed/refractory

multiple myeloma (RRMM). Paper/Poster presented at: American Society of Hematology Annual Meeting and Exposition. December 11-14, 2021. https://ash.confex.com/ash/2021/webprogram/Paper144921.html. Published 2021. Accessed 10 Feb 2022.

VV-RIM-00312509-1.0 Approved - 18 Aug 2023 GMT-5:00

20. INVESTIGATOR'S AGREEMENT

I have read the attached protocol: An Open-label, Randomized, Phase 3 Study of Linvoseltamab (REGN5458; anti-BCMA x anti-CD3 Bispecific Antibody) Versus the Combination of Elotuzumab, Pomalidomide, and Dexamethasone (EPd), in Patients with Relapsed/Refractory Multiple Myeloma (LINKER-MM3) and agree to abide by all provisions set forth therein.

I agree to comply with the current International Council for Harmonisation Guideline for Good Clinical Practice and the laws, rules, regulations, and guidelines of the community, country, state, or locality relating to the conduct of the clinical study.

I also agree that persons debarred from conducting or working on clinical studies by any court or regulatory agency will not be allowed to conduct or work on studies for the sponsor or a partnership in which the sponsor is involved. I will immediately disclose it in writing to the sponsor if any person who is involved in the study is debarred, or if any proceeding for debarment is pending, or, to the best of my knowledge, threatened.

This document contains confidential information of the sponsor, which must not be disclosed to anyone other than the recipient study staff and members of the IRB/EC. I agree to ensure that this information will not be used for any purpose other than the evaluation or conduct of the clinical investigation without the prior written consent of the sponsor.

_____ _____

(Signature of Investigator) (Date)

_____

(Printed Name)

VV-RIM-00312509-1.0 Approved - 18 Aug 2023 GMT-5:00

APPENDIX 1. INTERNATIONAL MYELOMA WORKING GROUP RESPONSE CRITERIA

Category	Criteria
sCR	• CR as defined below, **plus** • Normal FLC ratio, **and** • Absence of clonal plasma cells in bone marrow by immunohistochemistry or 2- to 4-color flow cytometry[a]
CR[b]	• Negative immunofixation of the serum and urine[c], **and** • Disappearance of any soft tissue plasmacytomas, **and** • <5% plasma cells in bone marrow
VGPR	• Serum and urine M-protein detectable by immunofixation but not on electrophoresis, **or** • ≥90% reduction in serum M-protein plus urine M-protein level <100 mg/24 hours • In addition to the above criteria, if present at baseline, a ≥90% reduction in size of soft tissue plasmacytomas compared with baseline
PR	• ≥50% reduction of serum M-protein plus reduction in urine M-protein by ≥90% or to <200 mg/24 hours • If serum and urine M-protein are not measurable, a ≥50% decrease in the difference between involved and uninvolved FLC levels is required in place of the M-protein criteria • If serum and urine M-protein are not measurable, and serum free light assay is also not measurable, ≥50% reduction in plasma cells is required in place of M-protein, provided baseline bone marrow plasma cell percentage was ≥30% • In addition to the above criteria, if present at baseline, a ≥50% reduction in the size of soft tissue plasmacytomas is also required
MR	• ≥25% to ≤49% reduction of serum M-protein **and** reduction in 24-hour urine M-protein by 50 to 89% • In addition to the above criteria, if present at baseline, a 25% to 49% reduction in the size of soft tissue plasmacytomas is also required
SD	• Not meeting criteria for CR, VGPR, PR, or PD
PD	• Increase of 25% from lowest confirmed response value in one or more of the following:

VV-RIM-00312509-1.0 Approved - 18 Aug 2023 GMT-5:00

Category	Criteria
	– Serum M-protein (absolute increase must be ≥0.5 g/dL)[d] – Urine M-protein (absolute increase must be ≥200 mg/24 hours) – Only in patients without measurable serum and urine M-protein levels, the difference between involved and uninvolved FLC levels (absolute increase must be >10 mg/dL) – Only in patients without measurable serum and urine M-protein levels and without measurable involved FLC levels, bone marrow plasma cell percentage (absolute increase must be ≥10%) • Appearance of new osteolytic bone lesions or soft tissue plasmacytomas or definite increase in size of existing bone lesions or soft tissue plasmacytomas (≥50% increase from nadir in SPD of >1 lesion, or ≥50% increase in the longest diameter of a previous lesion >1 cm in short axis)

sCR=stringent complete response; CR=complete response; VGPR=very good partial response; PR=partial response; MR=minimal response; SD=stable disease; PD=progressive disease; FLC=free light chain; SPD=sum of the products of the maximal perpendicular diameters of measured lesions

[a] Presence or absence of clonal plasma cells is based upon the kappa/lambda ratio. An abnormal kappa/lambda ratio by immunohistochemistry or flow cytometry requires a minimum of 100 plasma cells for analysis. An abnormal ratio reflecting the presence of an aberrant clone is a kappa/lambda ratio of >4:1 or <1:2.

[b] Clarifications to IMWG criteria for coding CR and VGPR in subjects in whom the only measurable disease is by serum FLC levels: CR in such subjects indicates a normal FLC ratio of 0.26 to 1.65 in addition to CR criteria listed above. VGPR in such subjects requires a >90% decrease in the difference between involved and uninvolved FLC levels.

[c] No evidence of residual myeloma-associated monoclonal protein isotype(s) on immunofixation of the serum and urine. New positive immunofixation results after achieving CR, when the isotype is different, can be secondary to therapeutic monoclonal antibodies or monoclonal/oligoclonal immune reconstitution and should be carefully reviewed to prevent confusion with relapse.

[d] M-protein increase of≥1 g/dL is sufficient to define progression if baseline M-protein is ≥5 g/dL.

Notes:

- All response categories require two consecutive assessments of the applicable disease parameter (serum M-protein, urine M-protein, or serum FLC), performed at any time (no minimum interval is required, it can be done the same day); however, to confirm response or progressive disease, two discrete samples are required; testing cannot be based upon the splitting of a single sample. Radiographic and bone marrow assessments need not be confirmed.
- VGPR and CR categories require serum and urine studies regardless of whether disease at baseline was measurable on serum, urine, both, or neither.
- Patients will be considered to have progressive disease if they meet the criteria for progression by a variable that was not considered measurable at baseline; however, for patients who had a measurable serum or urine M-spike at baseline, progression cannot be defined by increases in serum FLC alone.
- Serum FLC levels should only be used for response assessment when both the serum and urine M-component levels are deemed not measurable at baseline.
- For IgA myeloma, quantitative immunoglobulin measurements are preferred for disease assessments; the same percentage changes apply as for serum M-spike.

VV-RIM-00312509-1.0 Approved - 18 Aug 2023 GMT-5:00

- The lowest confirmed value before suspected progression will be used as baseline for calculation of progression; if a serum and/or urine spike is considered too low to quantitate, this value can be assigned as zero as a baseline for documentation of subsequent progressive disease.
- Any soft tissue plasmacytoma documented at baseline must undergo serial monitoring; otherwise, the patient is classified as inevaluable.

Source: Adapted from (Rajkumar, 2011) and (Kumar, 2016)

VV-RIM-00312509-1.0 Approved - 18 Aug 2023 GMT-5:00

APPENDIX 2. INTERNATIONAL STAGING SYSTEM (ISS) FOR MM

Prognostic Factor	Criteria
ISS stage	
I	Serum β2-microglobulin <3.5 mg/L, serum albumin ≥3.5 g/dL
II	Serum β2-microglobulin <3.5 mg/L; serum albumin <3.5 g/dL; or Serum β2-microglobulin 3.5 to 5.5 mg/L, irrespective of serum albumin
III	Serum β2-microglobulin >5.5 mg/L

Abbreviations: ISS=International Staging System; LDH=lactate dehydrogenase; MM=multiple myeloma

VV-RIM-00312509-1.0 Approved - 18 Aug 2023 GMT-5:00

APPENDIX 3. STANDARD RISK FACTORS FOR MM AND THE R-ISS

Prognostic Factor	Criteria
ISS stage	
I	Serum β2-microglobulin <3.5 mg/L, serum albumin ≥3.5 g/dL
II	Not ISS stage I or III
III	Serum β2-microglobulin ≥5.5 mg/L
CA by iFISH	
High risk	Presence of del(17p) and/or translocation t(4;14) and/or translocation t(14;16)
Standard risk	No high-risk CA
LDH	
Normal	Serum LDH < the upper limit of normal
High	Serum LDH > the upper limit of normal
Updated model for risk stratification of MM	
R-ISS stage	
I	ISS stage I and standard-risk CA by iFISH and normal LDH
II	Not R-ISS stage I or III
III	ISS stage III and either high-risk CA by iFISH or high LDH

Abbreviations: CA=chromosomal abnormalities; iFISH=interphase fluorescent in situ hybridization; ISS=International Staging System; LDH=lactate dehydrogenase; MM=multiple myeloma; R-ISS=revised International Staging System.
Source: Palumbo, 2015

VV-RIM-00312509-1.0 Approved - 18 Aug 2023 GMT-5:00

APPENDIX 4. Immune Effector Cell-Associated Encephalopathy Score To Screen For Immune Effector Cell-Associated Neurotoxicity Syndrome

This CARTOX-10-based screening tool, termed the immune effector cell-associated encephalopathy (ICE) score, grades neurotoxicity by assessing alterations in speech, orientation, handwriting, and concentration that are highly suggestive of the encephalopathy observed in patients with ICANS (Lee, 2019). The ICE score is derived as follows:

- Orientation: orientation to year, month, city, hospital: 4 points
- Naming: ability to name 3 objects (eg, point to clock, pen, button): 3 points
- Following commands: ability to follow simple commands (eg, “Show me 2 fingers” or “Close your eyes and stick out your tongue”): 1 point
- Writing: ability to write a standard sentence (eg, “Our national bird is the bald eagle”): 1 point
- Attention: ability to count backwards from 100 by 10: 1 point.

Total ICE score corresponds to the following ICANS grading:

- 10, no impairment
- 7-9, grade 1 ICANS
- 3-6, grade 2 ICANS
- 0-2, grade 3 ICANS
- 0 due to patient unarousable and unable to perform ICE assessment, grade 4 ICANS

See Section 8.3.3 for management of CNS toxicity/potential ICANS events.

VV-RIM-00312509-1.0 Approved - 18 Aug 2023 GMT-5:00

APPENDIX 5. PAIN MEDICATION ALGORITHM (MODIFIED AQA)

Pain Mediation Intensity Scale	Pain Medication Intensity Category
1	No analgesic use (+/- adjuvant)
2	Non-opioid analgesics (+/- adjuvant)
3	≤30 mg OME per day (+/- adjuvant)
4	>30-75 mg OME per day (+/- adjuvant)
5	>75-150 mg OME per day (+/- adjuvant)
6	>150-300 mg OME per day (+/- adjuvant)
7	>300-600 mg OME per day (+/- adjuvant)
8	>600 mg OME per day (+/- adjuvant)

OME=oral morphine equivalent

VV-RIM-00312509-1.0 Approved - 18 Aug 2023 GMT-5:00

SIGNATURE OF SPONSOR'S RESPONSIBLE OFFICERS

(Medical/Study Director, Regulatory Representative, Clinical Study Lead, and Biostatistician)

To the best of my knowledge, this report accurately describes the planned conduct of the study.

Study Title: An Open-label, Randomized, Phase 3 Study of Linvoseltamab (REGN5458; anti-BCMA x anti-CD3 Bispecific Antibody) Versus the Combination of Elotuzumab, Pomalidomide, and Dexamethasone (EPd), in Patients with Relapsed/Refractory Multiple Myeloma (LINKER-MM3)

Protocol Number: Protocol R5458-ONC-2245

Protocol Version: Amendment 2 EU&UK

See appended electronic signature page

Sponsor's Responsible Medical/Study Director

See appended electronic signature page

Sponsor's Responsible Regulatory Liaison

See appended electronic signature page

Sponsor's Responsible Clinical Study Lead

See appended electronic signature page

Sponsor's Responsible Biostatistician

VV-RIM-00312509-1.0 Approved - 18 Aug 2023 GMT-5:00

Signature Page for VV-RIM-00312509 v1.0

Approval/eSignature	Fiona Mortimer fiona.mortimer@regeneron.com Regulatory 18-Aug-2023 13:51:02 GMT+0000

Approval/eSignature	Vygngley Moore vygngley.moore@regeneron.com Clinical 18-Aug-2023 13:53:01 GMT+0000

Approval/eSignature	James Drew james.drew@regeneron.com Clinical 18-Aug-2023 14:37:24 GMT+0000

Approval/eSignature	Cesar Conti rafael.conti@regeneron.com Clinical 18-Aug-2023 14:51:23 GMT+0000

Approval/eSignature	Jyotirmoy Dey jyotirmoy.dey@regeneron.com Biostatistics / Data Management 18-Aug-2023 14:58:13 GMT+0000

Signature Page for VV-RIM-00312509 v1.0 Approved