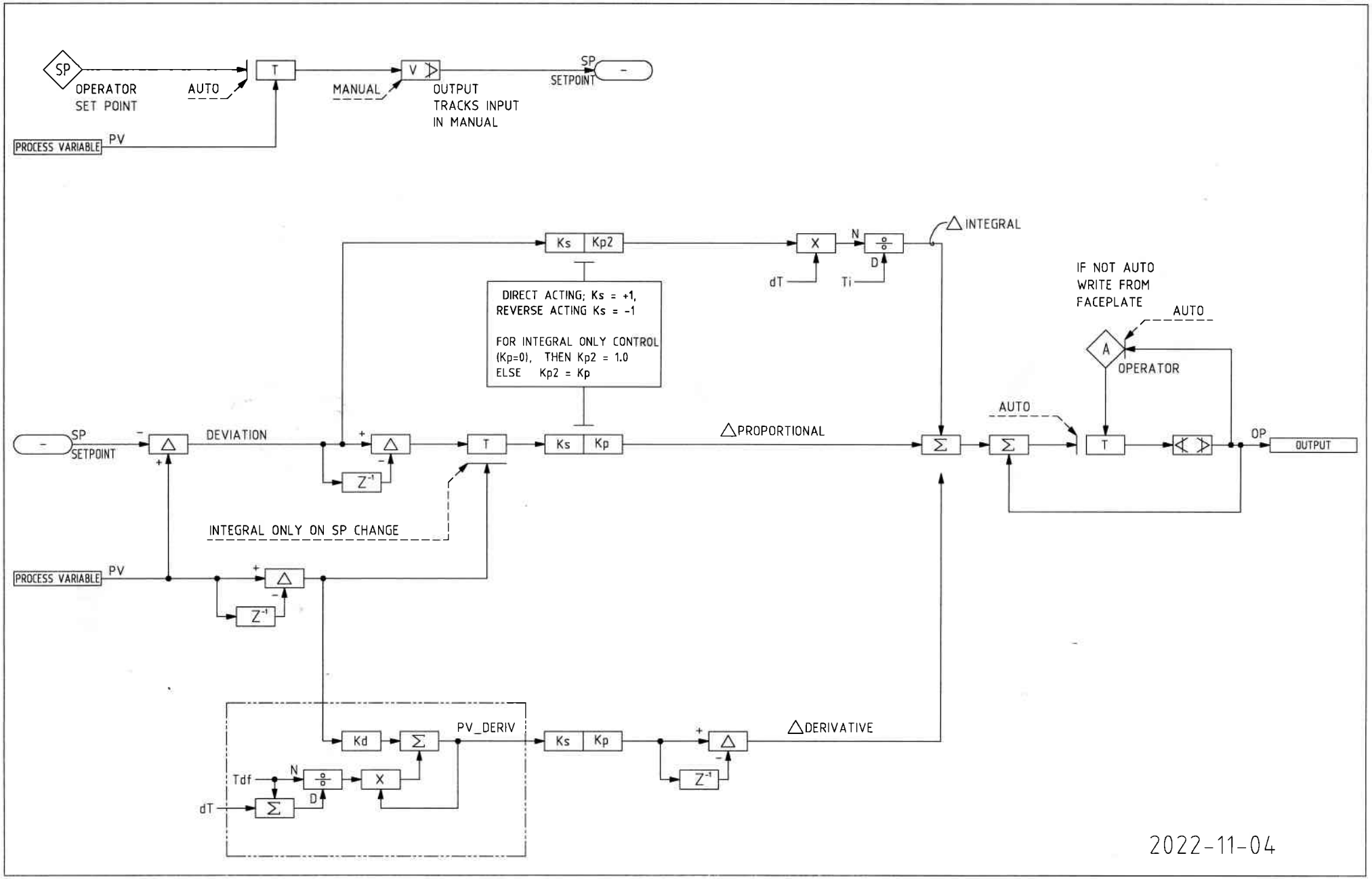
SP
OPERATOR
SET POINT
AUTO
T
MANUAL
V
OUTPUT
TRACKS INPUT
IN MANUAL
SP
SETPOINT
PROCESS VARIABLE
PV
Ks
Kp2
X
N
D
dT
Ti
INTEGRAL
DIRECT ACTING; Ks = +1,
REVERSE ACTING Ks = -1
FOR INTEGRAL ONLY CONTROL
(Kp=0), THEN Kp2 = 1.0
ELSE Kp2 = Kp
IF NOT AUTO
WRITE FROM
FACEPLATE
AUTO
A
OPERATOR
SP
SETPOINT
DEVIATION
T
Ks
Kp
PROPORTIONAL
AUTO
T
OP
OUTPUT
INTEGRAL ONLY ON SP CHANGE
PROCESS VARIABLE
PV
Kd
PV_DERIV
Tdf
N
D
X
dT
Ks
Kp
DERIVATIVE

2022-11-04