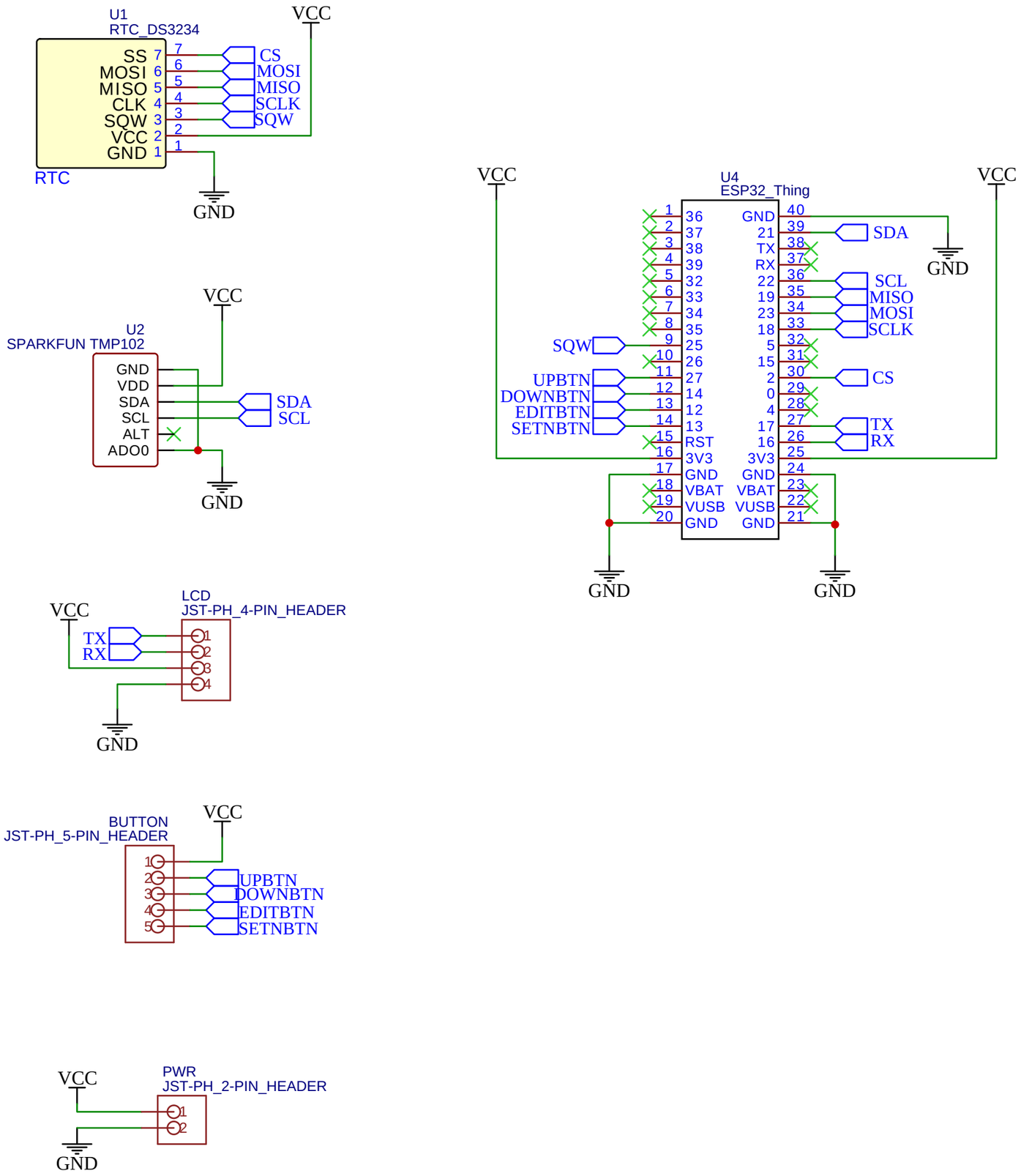

TITLE: Temperature Logger		REV: 1.0
EasyEDA	Company: N/A	Sheet: 1/1
	Date: 2021-07-04 Drawn By: hkdavid74	