2025 Feb

CRAFTSMAN®

INSTRUCTION MANUAL | GUIDE D'UTILISATION | MANUAL DE INSTRUCTIONES

CMST32642RB/BK
CMST32752RB/BK
CMST34062RB/BK
CMST34110RB/BK
CMST34162RB/BK
CMST35282RB/BK
CMST352102RB/BK
CMST98267RB/BK
CMST98268RB/BK BK, black
CMST98269RB/BK
CMST98270RB/BK
CMST98272RB/BK
CMST98273RB/BK
CMST98265RB
CMST98266RB
CMST98271RB/BK
CMST98275RB/BK
CMST98529RB/BB/BK
CMST98062GB/WW

Ball Bearing Chests and Cabinets
Coffres et Armoires à Roulement à Billes
Cofres y Gabinetas de Herramientas con Rodamientos de Bolas

IF YOU HAVE QUESTIONS OR COMMENTS, CONTACT US.
POUR TOUTE QUESTION OU TOUT COMMENTAIRE, NOUS CONTACTER.
SI TIENE DUDAS O COMENTARIOS, CONTÁCTENOS.

1

1-888-331-4569 **WWW.CRAFTSMAN.COM**

English ***(original instructions)*** 5

Français *(traduction de la notice d'instructions originale)* 8

Español *(traducido de las instrucciones originales)* 12

Only English Included in PDF

2

Product you purchased may vary from pictures shown. / Le produit que vous avez acheté peut varier de l'image affichée. / El producto que compraste puede variar de la imagen que se muestra.

Fig. A

CMST Models

My Model: CMST98268BK

3

Fig. B

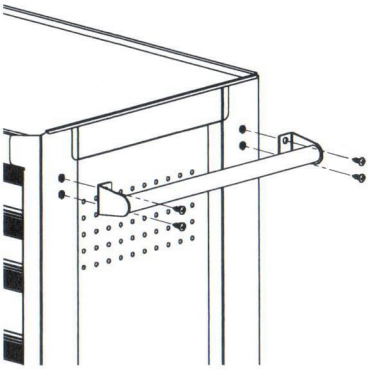

Fig. C

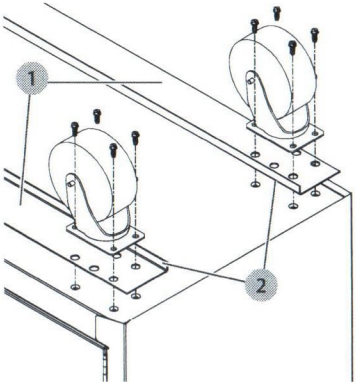

Fig. D

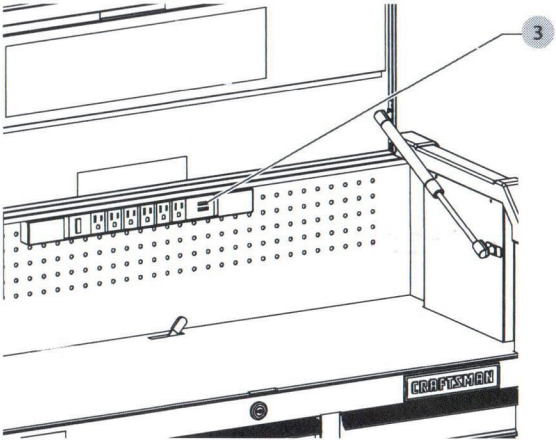

Fig. E

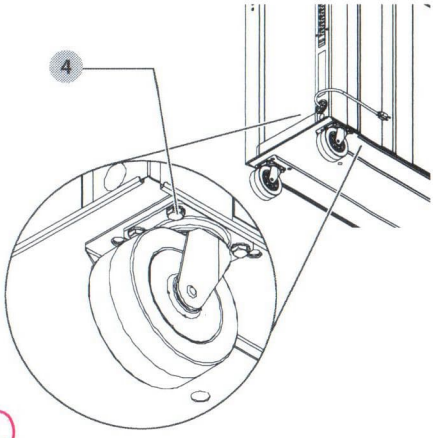

Fig. F

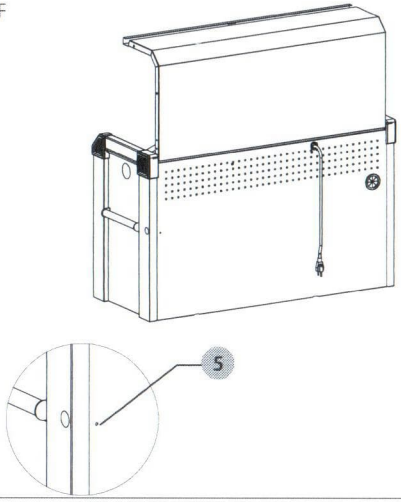

Fig. G

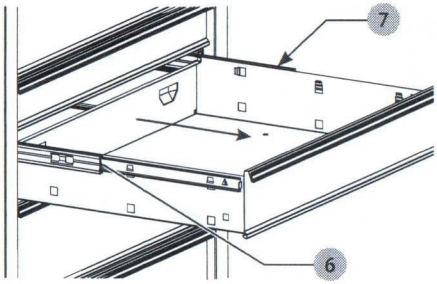

Fig. H

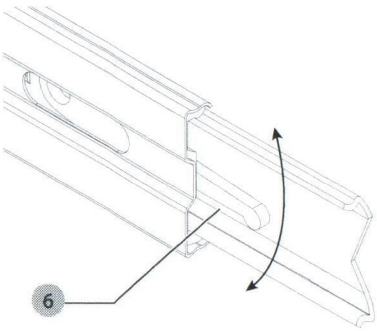

Fig. I

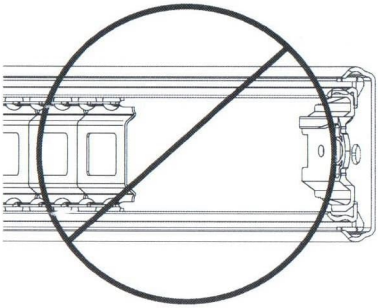

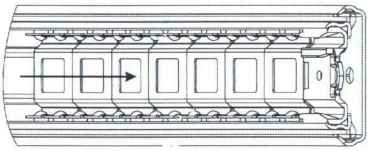

Fig. J

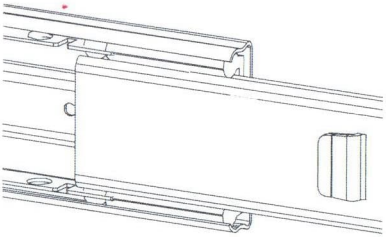

Fig. K

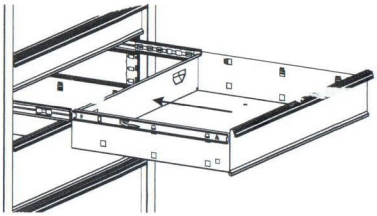

Fig. L

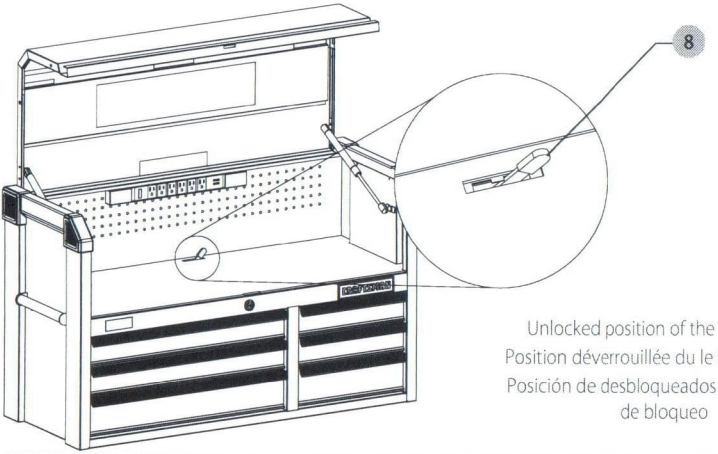

Unlocked position of the lock lever /
Position déverrouillée du le levier d'arrêt /
Posición de desbloqueados de la palanca
de bloqueo

5

Fig. M

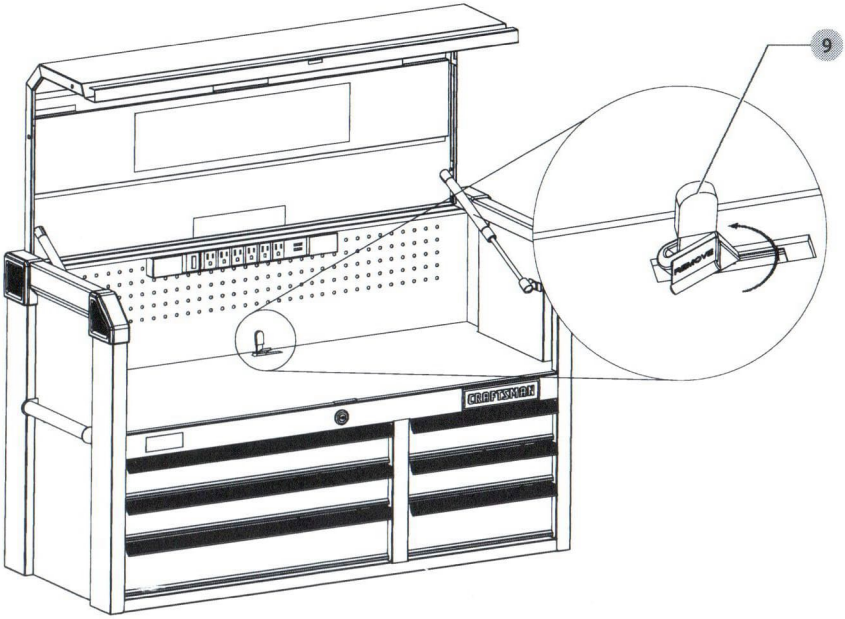

Fig. N

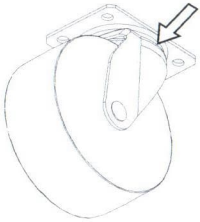

Ball bearing slides /
Glissières à billes /
Guías de rodamientos
de bolas

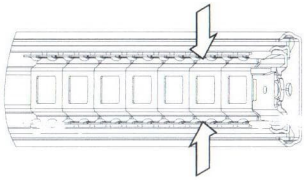

6

CAPACITIES

CAUTION: *To reduce the risk of injury, do not overload cabinet.*

The maximum weight for each drawer should be no more than 100 lbs (45 kg).

The maximum static load rating, including contents, should be no more than 1500 lbs (680 kg) for cabinets.

Service Parts

Call **888-331-4569** for Service Parts.

Locating Model # Information

Model numbers and other information required for service parts are located on a label on the interior right side of the topmost drawer.

Definitions: Safety Alert Symbols and Words

This instruction manual uses the following safety alert symbols and words to alert you to hazardous situations and your risk of personal injury or property damage.

DANGER: *Indicates an imminently hazardous situation which, if not avoided,* ***will*** *result in* ***death or serious injury.***

WARNING: *Indicates a potentially hazardous situation which, if not avoided,* ***could*** *result in* ***death or serious injury.***

CAUTION: *Indicates a potentially hazardous situation which, if not avoided,* ***may*** *result in* ***minor or moderate injury.***

NOTICE: *Indicates a practice* ***not related to personal injury*** *which, if not avoided,* ***may*** *result in* ***property damage****.*

(Used without word) Indicates a safety related message.

General Safety Rules for Cabinets and Chests

CAUTION: *Read and follow all Safety Rules and Operating Instructions before assembly and first use of this product.*

DANGER:

- ***DO NOT stand on this product.*** *You may fall or cause product to tip.*
- ***DO NOT open more than one drawer at one time.*** *The product may become unstable and tip.*
- ***DO NOT step in the drawers.*** *You may fall or cause product to tip.*
- ***DO NOT mount this product on a truck bed or any other moving object.***
- ***DO NOT move the product prior to closing and locking all the drawers and chest lid.*** *The drawers could come open and make the product unstable and tip.*
- ***DO NOT place any objects on top of a closed lid.***

WARNING:

- ***WEAR SAFETY GLASSES during assembly and disassembly.***
- ***DO NOT pull the unit, push it when moving.*** *Pushing the unit will prevent serious ankle and foot injuries.*
- ***USE THE BRAKES when not moving this product.*** *This will prevent the product from rolling.*
- ***DO NOT alter this product in any manner.*** *For example, do not weld external lockbars or attach electrical equipment.*
- ***Keep the product on level surfaces.*** *The product may become unstable and tip if stored or moved on an uneven surface.*
- ***BE CAREFUL when closing drawers, the cover or doors.*** *Remove hands before the cover closes completely.*
- ***To reduce the risk of injury, during initial loading, distribute items across all drawers to reduce the risk of unit tipping over.*** *Load bottom drawers first. Only open one drawer at a time, unit can tip over causing injury or death.*
- ***DO NOT allow unsupervised children to play on or with the cabinet.*** *Failure to adhere to instructions regarding restrictions to the number of open drawers (even when empty) could cause tipover, resulting in serious injury or death.*

CAUTION:

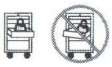

- ***This product is not designed to be directly lifted with a forklift, or to be towed with any mechanical devices.***
- ***DO NOT exceed the maximum weight capacity for each drawer or shelf.***
- ***Distribute contents of loaded drawers evenly.*** *DO NOT position all contents of a drawer in the front portion of the drawer.*
- ***This product should be empty when transporting by vehicle.*** *Properly secure when transporting.*
- ***DO NOT exceed maximum product weight, including contents.*** *See* **Capacities** *for more information.*
- ***As with all metal products, this product can contain burrs and sharp edges.*** *Wear protective gloves during assembly and disassembly.*
- ***Use adequate manpower when assembling and moving this unit.*** *Failure to do so may cause personal injury or product damage.*

7

Extension Cord

- ***Follow all extension cord manufacturer's Warnings and Instructions.***
- ***Only use a three-wire extension cord with all three prongs intact. Never remove the round grounding prong.***
- ***Extension cord must be connected to a 125 Volt GFCI protected outlet with proper ground. If GFCI outlet is not available, use an extension cord with GFCI protection built in.***
- ***Check the insulation and plugs of extension cord before using. DO NOT use cord if it is worn or damaged.***
- ***DO NOT overload extension cord.***
- ***Remove extension cord from the hole before moving or transporting storage chest.***
- ***Only use an extension cord that is rated for outdoor use.***
- ***DO NOT connect extension cord to outlet that also supplies critical safety equipment with power.***
- ***Do not expose chest to rain. Do not use in wet or damp conditions.***

ASSEMBLY

NOTE: Not all assembly instructions will relate to your model.

HARDWARE

Items Needed

- 3/8" Wrench
- Cross head Screwdriver

Hardware Included

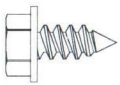
#14 - 10 x 5/8" Hex Screws (Qty 16)

#14 - 10 x 3/4" Cross head Screw (Qty 4)

#5/16-18 x .750 Hex Screws (Qty 16)
(For Model CMST98275RB/BK)

Side Handle Attachment (Fig. B)

Items Needed

- #14 - 10 x 3/4" Cross head screws (Qty 4)
- Cross head screwdriver

To Attach the Side Handle

1. Attach the side handle using four #14-10 x 3/4" cross head screws.
2. Hand tighten. Do not overtighten.

Caster Installation (Fig. C)

Items Needed

- #14 - 10 x 5/8" Hex Screws (Qty 16)
- 3/8" Wrench

For Model CMST98275RB/BK Only

- #5/16 - 18 x .750" Hex Screws (Qty 16)
- 1/2" Wrench

Process

NOTE: Use adequate personnel for this operation.

NOTE: Failure to install caster angles ❶ may result in premature cabinet failure.

1. Place the unit on its top. Use packaging material to protect the paint finish.
2. Position caster angles ❶ on the cabinet. Flanges ❷ should be toward the inside and pointed up.
3. Mount both swivel casters on the same side of the cabinet as the side handle.
4. Attach casters and caster angles using four #14 - 10 x 5/8" hex screws for each caster.
5. Wrench-tighten all screws to 55 in-lb. Do not overtighten.
   For Model CMST98275RB/BK Only - Attach casters using four #5/16-18 x .750 hex screws for each caster. Wrench-tighten to 21 ft-lb ± 4.
6. Return the unit to its upright position.

Built-In Outlet with USB Ports (Fig. D)

- A power strip with USB ports ❸ is located in some units.

⚠ ***WARNING:*** *This power strip is to be used with ground fault circuit interrupter.*

⚠ ***WARNING:*** *Connection of a space heater to the powerstrip could cause fire.*

⚠ ***WARNING:*** *Connection of a single appliance with electrical ratings of 10A/1200W or higher could cause fire.*

Grounding

Grounding Mobile Cabinets (Fig. E)

1. Locate grounding image ⏚ on the side of the mobile cabinet.
2. Remove caster bolt ❹.
3. Use 14 AWG stranded green jacket copper wire with 1/4" terminal ring.
4. Insert caster bolt into terminal ring, replace the caster bolt, and tighten fully.
5. Terminate the end of the ground wire to an appropriate grounding location.

Grounding Top Chests (Fig. F)

1. Locate grounding image ⏚ on the side of the top chest.
2. For chests with grommet, use predrilled hole ❺.
3. Use 14 AWG stranded green jacket copper wire with 1/4" terminal ring.

4. Use a #10 x 3/8" self-tapping screw to hold the wire and terminal ring. Use supplied hole location with self-tapping screw for chests with grommet. Tighten fully.
5. Terminate the end of the ground wire to an appropriate grounding location.

OPERATION

Removing Drawers (Fig. G, H)

1. Empty the drawer.
2. Fully extend the drawer.
3. Push the right release slide lever 7 down, then push the left release slide lever 6 up.
4. Pull out drawer to remove.

Installing Drawers (Fig. I–K)

1. Pull slides and slide carrier out to fully extended position.
2. Hold the slide on the unit while aligning it with the slide on drawer.
3. Slightly insert one side and repeat for the other side. Slowly push drawer to its fully closed position to engage slide.
4. Open drawer and reclose to ensure proper operation.

Locking and Unlocking Top Chest Drawers (Fig. L, M)

To UNLOCK Chest Drawers

1. Unlock the chest with the key.
2. Open the chest cover and locate the lock lever 8 at the center back.
3. First time only, remove the shipping plug 9 by twisting it counterclockwise until it pops off (Fig. M). Discard the plug.
4. To unlock chest drawers, pull the lock lever forward to release it from the lock catch, then move the lock lever to the right resting it in the lock catch.

To LOCK Chest Drawers

1. Close all drawers and, pulling the lock lever 8 forward to release from the lock catch, move the lock lever to the left.
2. Close the chest cover and lock with the key.

NOTE: Ensure all drawers are fully closed before locking the unit with the lock lever. If the unit was locked with a drawer open, unlock the unit, close the drawer and lock the unit. Do not attempt to force a drawer into the lock position—this can result in damage to the soft close mechanism of the slide.

MAINTENANCE (Fig. N)

- Lubricate casters annually with high-quality bearing grease. Apply grease where shown.
- Check the caster bolts annually for tightness.
- Lubricate the slides with grease or equivalent (twice annually). Apply grease where shown.
- Lubricate lock with graphite annually.
- Periodically the drawer fronts, drawer trim, and other surfaces should be cleaned with a mild detergent and water.
- Auto wax will preserve the unit's luster finish. Apply the wax as to a car. The wax will also help protect the unit against scratches.
- Grease and oil can be removed with most standard cleaning fluids. For safety, use a nonflammable cleaning fluid.
- It is recommended that drawer liners are used to protect the finish inside the drawers and to make the drawers easier to clean. The drawer liners may be cleaned with soap and water.
- Corrosive materials should be cleaned up immediately to minimize damage to any surfaces.

TEN YEAR WARRANTY

FOR TEN YEARS from the date of purchase, this product is warranted against any defects in material or workmanship. With proof of purchase, a defective part will be replaced free of charge. If a replacement part is unavailable, the product will be replaced with one of equal value.

For warranty coverage details to obtain free replacement, visit the web page: **www.craftsman.com/support/warranty.**

This warranty does not apply to a product that is damaged or altered through transportation, misuse, abuse, corrosion, accident, neglect, modification or mishandling, nor does coverage apply if the product is ever attached to a moving vehicle.

This TEN YEAR warranty is void if this product is ever used while providing commercial services or if rented to another person. For 90 DAY commercial and rental use terms, see the Craftsman warranty web page.

This warranty gives you specific legal rights, and you may also have other rights which vary from state to state.

For product or warranty information, contact us at:

www.Craftsman.com

Feb 2025 ~ Feb 2034

9

Feb 23 Lowes Bryan Pickup

CRAFTSMAN 701 East Joppa Road,
Townson, MD 21286
Copyright 2021, 2023

LOWE'S

LEARN MORE AT LOWES.COM/MYLOWESREWARDS

LOWE'S HOME CENTERS, LLC
3225 FREEDOM BLVD.
BRYAN, TX 77802 (979) 774-4141

- SALE -

SALES#: S0103P02 3984395 TRANS#: 442393411 02-23-25

3807750 CM 27IN BLK 5-DW CAB B4	269.00

toolbox craftsman

SUBTOTAL:	269.00
TOTAL TAX:	22.19
INVOICE 98873 TOTAL:	291.19
VISA:	291.19

VISA: XXXXXXXXXXXX9091 AMOUNT: 291.19 AUTHCD: 01736D
CHIP REFID:010336873290 02/23/25 14:57:19
APL : CHASE VISA TVR : 0080008000
TSI : E800

Feb 23

STORE: 0103 TERMINAL: 36 02/23/25 14:57:45
OF ITEMS PURCHASED: 1
EXCLUDES FEES, SERVICES AND SPECIAL ORDER ITEMS

THANK YOU FOR SHOPPING LOWE'S.
FOR DETAILS ON OUR RETURN POLICY, VISIT
LOWES.COM/RETURNS
WRITTEN COPY OF THE RETURN POLICY
AT OUR CUSTOMER SERVICE