ITEM NO.	PART NUMBER	Folded/QTY.
1	Foldable CubeSat Z+	1
2	Foldable CubeSat Side Panels	2
3	Foldable CubeSat Top Side Panel	1
4	Foldable CubeSat Top Panels	1
5	Foldable CubeSat Front Panel	1
6	4-40 91253A102	5

NOTE: Items 1-5 are printed as one part.
The print-in hinges allow it to fold into desired final shape.

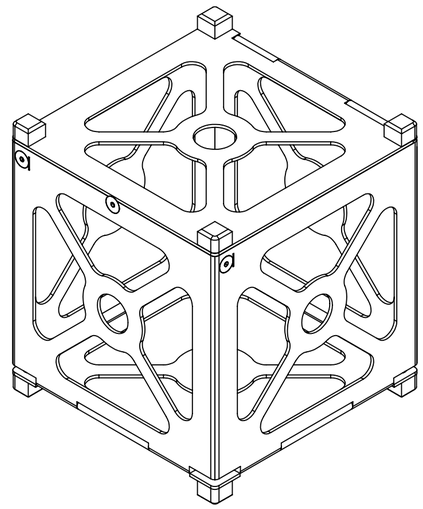

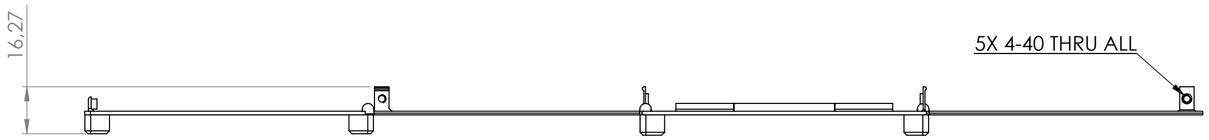

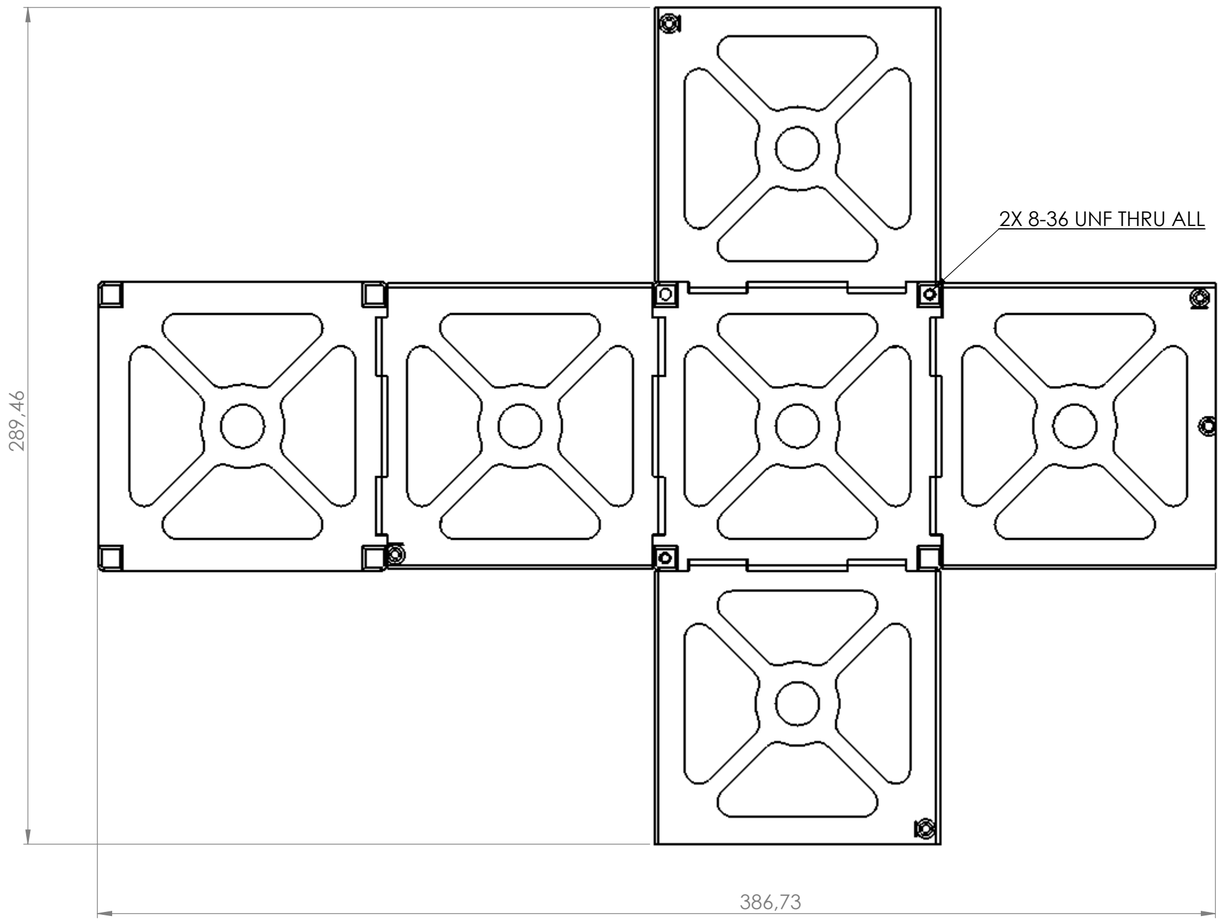

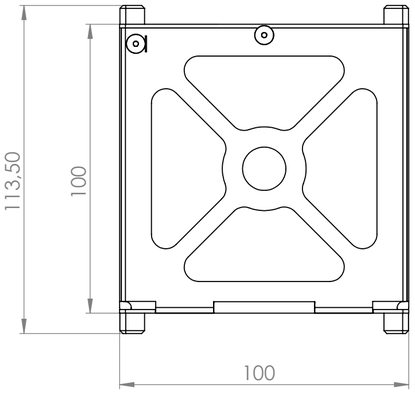

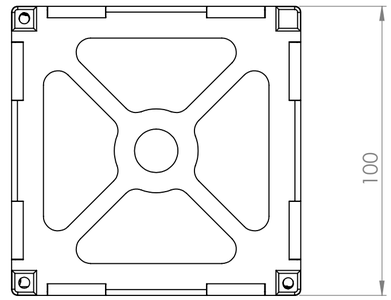

UNLESS OTHERWISE SPECIFIED: DIMENSIONS ARE IN MILLIMETERS SURFACE FINISH: TOLERANCES: LINEAR: ANGULAR:	FINISH:			DEBUR AND BREAK SHARP EDGES	DO NOT SCALE DRAWING / REVISION
	NAME	SIGNATURE	DATE		TITLE:
DRAWN					
CHK'D					
APPV'D					
MFG					
Q.A				MATERIAL:	DWG NO. Foldable Cube Sat A2
				WEIGHT:	SCALE:1:1.5 / SHEET 1 OF 1