Chapter 7. Resets

7.1. Overview

Resets are divided into three categories, each of which applies to a subset of RP2350:

Chip-level resets

apply to the entire chip. Used to put the entire chip into a default state. These are initiated by hardware events, the watchdog, or the debugger. When all chip level resets are de-asserted, the system resets are released and the processors boot.

System resets

apply to components essential to processor operation. System components have interdependencies, therefore their resets are de-asserted in sequence by the Power-on State Machine (PSM). The full PSM sequence is triggered by deassertion of chip-level resets. A full or partial sequence can be triggered by the watchdog or debugger. The sequence culminates in processor boot.

Subsystem resets

apply to components *not* essential for operation of the processors. The resets can be independently asserted by writing to the `RESETS` registers and de-asserted by software, the watchdog, or the debugger.

The watchdog can be programmed to trigger any of the above categories.

7.2. Changes from RP2040

RP2350 retains all RP2040 chip-level reset features.

RP2350 adds the following features:

- new chip reset sources:
  - glitch detector
  - watchdog
  - debugger
- new destinations:
  - new power management components

RP2350 makes the following modifications to existing features:

- Modified the `CHIP_RESET` register, which records the source of the last chip level reset. In RP2040, `CHIP_RESET` was stored in the `LDO_POR` register block. In RP2350, `CHIP_RESET` was extended and moved to the `POWMAN` register block, which is in the new always-on power domain (`AON`).
- Renamed the brownout reset (`BOR`) registers to brownout detect (`BOD`), added functionality, and moved them to the new `POWMAN` register block.
- Added more system reset stages. To support this, added additional Power-on State Machine fields and rearranged the existing fields.
- Added additional `RESETS` registers and rearranged the existing fields.
- Extended watchdog options to enable triggers for new resets.

NOTE

Watchdog scratch registers are not preserved when the watchdog triggers a chip-level reset. However, watchdog scratch registers *are* preserved after a system or subsystem reset. For general purpose scratch registers that do *not* reset after a chip-level reset, see the `POWMAN` register block Section 6.4, "Power management (POWMAN) registers".

7.3. Chip-level resets

Chip-level resets put the entire chip into a default state. These resets are only initiated by hardware events, the debugger, or a watchdog timeout.

7.3.1. Chip-level reset table

Table 528, "List of chip-level reset causes" shows the components reset by each of the chip-level reset sources. A dash (—) indicates no change caused by this source.

Table 528. List of chip-level reset causes

Reset Source	SW-DP	AON Scratch	POWMAN	Power State	Double Tap	Rescue
POR	reset	reset	hard reset	→ `P0.0`	reset	reset
BOR	reset	reset	hard reset	→ `P0.0`	reset	reset
EXTERNAL RESET (RUN)	reset	reset	hard reset	→ `P0.0`	—	reset
DEBUGGER RESET REQ	—	—	hard reset	→ `P0.0`	—	reset
DEBUGGER RESCUE	—	—	hard reset	→ `P0.0`	—	set
WATCHDOG POWMAN ASYNC RESET	—	—	hard reset	→ `P0.0`	—	—
WATCHDOG POWMAN RESET	—	—	soft reset	→ `P0.0`	—	—
WATCHDOG SWCORE RESET	—	—	—	→ `P0.0`	—	—
SWCORE POWERDOWN	—	—	—	→ `P0.x`	—	—
GLITCH_DETECTOR	—	—	—	—	—	—
WATCHDOG RESET PSM	—	—	—	—	—	—

All chip-level resets sources in the table also reset the Power-on State Machine (PSM). This asserts all of the system resets downstream of the PSM. System resets includes low-level chip infrastructure like the system-level clock generators, as well as the processor cold and warm reset domains.

All chip-level reset sources in the table also reset the system watchdog peripheral. This includes watchdog scratch registers SCRATCH0 → SCRATCH7.

You can interpret the table columns as follows:

Reset Source

Indicates which of the events listed in Chip-level Reset Sources is responsible for this chip-level reset.

SW-DP

Indicates the SWD Debug Port and the RP-AP (Section 3.5.10, "RP-AP") are reset.

AON Scratch

Indicates scratch register state in POWMAN SCRATCH0 → SCRATCH7 and BOOT0 → BOOT3 registers is lost. These registers are always-on, meaning they are preserved across power-down of the switched core domain.

POWMAN

Indicates some or all of the register state of the power manager (POWMAN) is reset.

Power State

Indicates a change to the powered/unpowered status of core voltage domains.

Double Tap

Indicates the CHIP_RESET.DOUBLE_TAP bit is reset.

Rescue

Indicates changes to the CHIP_RESET.RESCUE_FLAG bit.

7.3.2. Chip-level reset destinations

Chip-level resets apply to the following primary components:

- the SW-DP and RP-AP debug components
- power manager scratch and boot registers
- power manager including the always-on timer
- power state (restored to state `P0.0`, in which all domains are powered, see Section 6.2.2, "Power states")
- system resets (any chip-level reset triggers the PSM (power-on state machine), which sequences the system resets, see Section 7.4, "System resets (Power-on State Machine)")
- watchdog (reset by any chip-level reset, including one triggered by the watchdog)

Chip-level resets also reset the following two `CHIP_RESET` register flags:

- CHIP_RESET.DOUBLE_TAP: the bootrom can use this flag to detect a double-press of a button connected to the RUN pin, and enter the USB or UART bootloader. See the BOOT_FLAGS1.DOUBLE_TAP OTP flag.
- CHIP_RESET.RESCUE_FLAG: this flag instructs the bootrom to halt the boot process. The bootrom clears the flag to acknowledge. You can use this to perform a full-system reset from almost any state (particularly ones where all system clocks are stopped), and catch the processors before they re-run the code that caused the bad state.

NOTE

When the SW-DP and RP-AP are out of reset, you can use them to perform low-level debug operations like a rescue reset or a forced power-up over SWD. However accessing any other debug hardware, such as the Mem-APs, requires the system clock to be running.

NOTE

These flags are located in located in the `CHIP_RESET` register in the POWMAN register space, so they are included in the always-on (AON) power domain.

7.3.3. Chip-level reset sources

In order of severity, the following events can trigger a chip-level reset:

Power-On Reset (POR)

The power-on reset ensures the chip starts up cleanly when power is first applied by holding it in reset until the digital core supply (DVDD) reaches a voltage high enough to reliably power the chip's core logic. The POR component is described in detail in Section 7.6.1, "Power-on reset (POR)".

Brownout Detection (BOD)

The brownout detector prevents unreliable operation when the digital core supply (DVDD) drops below a safe operating level. The BOD component is described in detail in Section 7.6.2, "Brownout detection (BOD)". The reset asserted by the BOD is referred to as the brownout reset, or BOR.

External Reset

The chip can be reset by taking the `RUN` pin low. This holds the chip in reset irrespective of the state of the core power supply (DVDD), the power-on reset block, and brownout detection block. `RUN` can be used to extend the initial power-on reset, or can be driven from an external source to start and stop the chip as required. If `RUN` is not used, it should be tied high. Double-tapping the `RUN` low will set CHIP_RESET.DOUBLE_TAP. Boot code reads this flag and selects an alternate boot sequence if the flag is set.

Debugger Reset Request

The debugger is able to initiate a chip-level reset using the `CDBGPWRUPREQ` control. For more information, see Section 3.5, "Debug".

Rescue Debug Port Reset

The chip can also be reset via the Rescue Debug Port. This allows the chip to be recovered from a locked-up state. In addition to resetting the chip, a Rescue Debug Port reset also sets CHIP_RESET.RESCUE_FLAG. This is checked by boot code at startup, causing it to enter a safe state if the bit is set. See Section 3.5.8, "Rescue reset" for more information.

Watchdog

The watchdog can trigger various levels of chip-level reset by setting appropriate bits in the WDSEL register. A chip-level reset triggered by a watchdog reset will reset the watchdog and the watchdog scratch registers. Additional general purpose scratch registers are available in `POWMAN`. These are not reset by a chip-level reset triggered by the watchdog.

SWCORE Powerdown

For a list of operations that power down the switched-core power domain (SWCORE) and trigger this reset, see Section 6.2, "Power management".

Glitch Detector

This reset fires if a glitch is detected in SWCORE power supply. For more information, see Section 10.9, "Glitch detector".

RISC-V Non-Debug-Module Reset

The `dmcontrol.ndmreset` bit in the RISC-V Debug Module resets all RISC-V harts in the system. It resets no other hardware. However, it is recorded as a chip-level reset reason in CHIP_RESET.HAD_HZD_SYS_RESET_REQ. See Section 3.5.3, "RISC-V debug" for details of the RISC-V debug subsystem.

The source of the last chip-level reset is recorded in the CHIP_RESET register.

A complete list of `POWMAN` registers is provided in Section 6.4, "Power management (POWMAN) registers".

7.4. System resets (Power-on State Machine)

Figure 27. Power-on State Machine Sequence

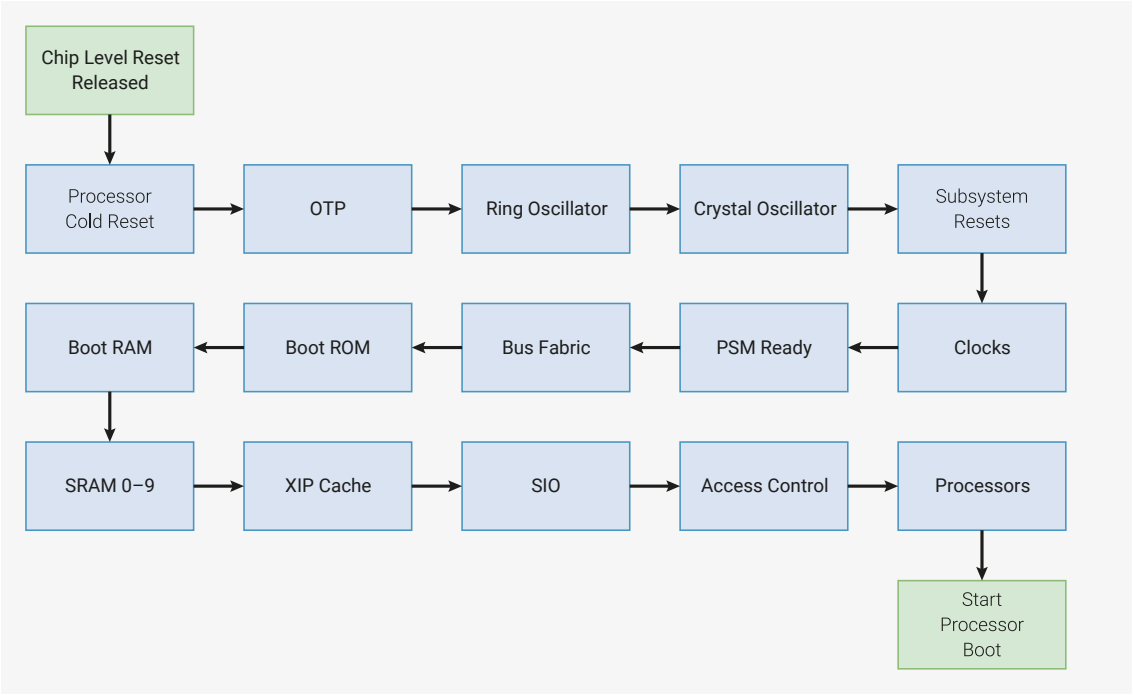

System Resets apply to components essential to processor operation. System components have interdependencies, therefore their resets are de-asserted in sequence by the Power-on State Machine (PSM). Each stage of the sequencer outputs a reset done signal when complete, `rst_done`, which releases the reset input to the next stage. A partial sequence runs after a write to the `FRCE_OFF` register or a watchdog timeout. Note that the `FRCE_ON` register is intended for internal use only and is disabled in production devices.

The Power-on State Machine sequences system-level reset release following a power-up of the switched core power domain. It is distinct from the power manager (POWMAN) which controls power domain switching, see Section 6.2, "Power management".

7.4.1. Reset sequence

Following a chip-level reset, the Power-on State Machine (PSM):

1. Removes cold reset to processors.
2. Takes OTP out of reset. OTP reads any content required to boot and asserts `rst_done`.
3. Starts the Ring Oscillator. Asserts `rst_done` once the oscillator output is stable.
4. Removes Crystal Oscillator (XOSC) controller reset. The XOSC does not start yet, so `rst_done` is asserted immediately.
5. Deasserts the master subsystem reset, but does not remove individual subsystem resets.
6. Starts the `clk_ref` and `clk_sys` clock generators. In the initial configuration, `clk_ref` runs from the ring oscillator with no divider and `clk_sys` runs from `clk_ref`.
7. The PSM confirms the clocks are active.
8. Removes Bus Fabric reset and initialises logic.
9. Removes various memory controllers' resets and initialises logic.
10. Removes Single-cycle IO subsystem (SIO) reset and initialises logic.
11. Removes Access Controller reset and initialises logic.
12. Deasserts Processor Complex reset. Both core 0 and core 1 start executing the boot code from ROM. The boot code reads the core id and core 1 sleeps, leaving core 0 to continue bootrom execution.

Following a watchdog reset trigger, the PSM restarts from a point selected by the PSM WDSEL register.

7.4.2. Register control

The PSM is a fully automated piece of hardware: it requires no input from the user to work. The debugger can trigger a full or partial sequence by writing to the `FRCE_OFF` register. The `FRCE_ON` register is a development feature that does nothing in production devices.

7.4.3. Interaction with watchdog

The watchdog can trigger a full or partial sequence by writing to the `WDSEL` register.

7.4.4. List of registers

The PSM registers start at a base address of `0x40018000` (defined as PSM_BASE in SDK).

Table 529. List of PSM registers

Offset	Name	Info
0x0	FRCE_ON	Force block out of reset (i.e. power it on)
0x4	FRCE_OFF	Force into reset (i.e. power it off)
0x8	WDSEL	Set to 1 if the watchdog should reset this
0xc	DONE	Is the subsystem ready?

PSM: FRCE_ON Register

Offset: 0x0

Description

Force block out of reset (i.e. power it on)

Table 530. FRCE_ON Register

Bits	Description	Type	Reset
31:25	Reserved.	-	-
24	**PROC1**	RW	0x0
23	**PROC0**	RW	0x0
22	**ACCESSCTRL**	RW	0x0
21	**SIO**	RW	0x0
20	**XIP**	RW	0x0
19	**SRAM9**	RW	0x0
18	**SRAM8**	RW	0x0
17	**SRAM7**	RW	0x0
16	**SRAM6**	RW	0x0
15	**SRAM5**	RW	0x0
14	**SRAM4**	RW	0x0
13	**SRAM3**	RW	0x0
12	**SRAM2**	RW	0x0

Bits	Description	Type	Reset
11	**SRAM1**	RW	0x0
10	**SRAM0**	RW	0x0
9	**BOOTRAM**	RW	0x0
8	**ROM**	RW	0x0
7	**BUSFABRIC**	RW	0x0
6	**PSM_READY**	RW	0x0
5	**CLOCKS**	RW	0x0
4	**RESETS**	RW	0x0
3	**XOSC**	RW	0x0
2	**ROSC**	RW	0x0
1	**OTP**	RW	0x0
0	**PROC_COLD**	RW	0x0

PSM: FRCE_OFF Register

Offset: 0x4

Description

Force into reset (i.e. power it off)

Table 531. FRCE_OFF Register

Bits	Description	Type	Reset
31:25	Reserved.	-	-
24	**PROC1**	RW	0x0
23	**PROC0**	RW	0x0
22	**ACCESSCTRL**	RW	0x0
21	**SIO**	RW	0x0
20	**XIP**	RW	0x0
19	**SRAM9**	RW	0x0
18	**SRAM8**	RW	0x0
17	**SRAM7**	RW	0x0
16	**SRAM6**	RW	0x0
15	**SRAM5**	RW	0x0
14	**SRAM4**	RW	0x0
13	**SRAM3**	RW	0x0
12	**SRAM2**	RW	0x0
11	**SRAM1**	RW	0x0
10	**SRAM0**	RW	0x0
9	**BOOTRAM**	RW	0x0
8	**ROM**	RW	0x0

Bits	Description	Type	Reset
7	**BUSFABRIC**	RW	0x0
6	**PSM_READY**	RW	0x0
5	**CLOCKS**	RW	0x0
4	**RESETS**	RW	0x0
3	**XOSC**	RW	0x0
2	**ROSC**	RW	0x0
1	**OTP**	RW	0x0
0	**PROC_COLD**	RW	0x0

PSM: WDSEL Register

Offset: 0x8

Description

Set to 1 if the watchdog should reset this

Table 532. WDSEL Register

Bits	Description	Type	Reset
31:25	Reserved.	-	-
24	**PROC1**	RW	0x0
23	**PROC0**	RW	0x0
22	**ACCESSCTRL**	RW	0x0
21	**SIO**	RW	0x0
20	**XIP**	RW	0x0
19	**SRAM9**	RW	0x0
18	**SRAM8**	RW	0x0
17	**SRAM7**	RW	0x0
16	**SRAM6**	RW	0x0
15	**SRAM5**	RW	0x0
14	**SRAM4**	RW	0x0
13	**SRAM3**	RW	0x0
12	**SRAM2**	RW	0x0
11	**SRAM1**	RW	0x0
10	**SRAM0**	RW	0x0
9	**BOOTRAM**	RW	0x0
8	**ROM**	RW	0x0
7	**BUSFABRIC**	RW	0x0
6	**PSM_READY**	RW	0x0
5	**CLOCKS**	RW	0x0
4	**RESETS**	RW	0x0

Bits	Description	Type	Reset
3	**XOSC**	RW	0x0
2	**ROSC**	RW	0x0
1	**OTP**	RW	0x0
0	**PROC_COLD**	RW	0x0

PSM: DONE Register

Offset: 0xc

Description

Is the subsystem ready?

Table 533. DONE Register

Bits	Description	Type	Reset
31:25	Reserved.	-	-
24	**PROC1**	RO	0x0
23	**PROC0**	RO	0x0
22	**ACCESSCTRL**	RO	0x0
21	**SIO**	RO	0x0
20	**XIP**	RO	0x0
19	**SRAM9**	RO	0x0
18	**SRAM8**	RO	0x0
17	**SRAM7**	RO	0x0
16	**SRAM6**	RO	0x0
15	**SRAM5**	RO	0x0
14	**SRAM4**	RO	0x0
13	**SRAM3**	RO	0x0
12	**SRAM2**	RO	0x0
11	**SRAM1**	RO	0x0
10	**SRAM0**	RO	0x0
9	**BOOTRAM**	RO	0x0
8	**ROM**	RO	0x0
7	**BUSFABRIC**	RO	0x0
6	**PSM_READY**	RO	0x0
5	**CLOCKS**	RO	0x0
4	**RESETS**	RO	0x0
3	**XOSC**	RO	0x0
2	**ROSC**	RO	0x0
1	**OTP**	RO	0x0
0	**PROC_COLD**	RO	0x0

7.5. Subsystem resets

7.5.1. Overview

The reset controller allows software to reset non-critical components in RP2350. The reset controller can reset the following components:

- USB Controller
- PIO
- Peripherals, including UART, I2C, SPI, PWM, Timer, ADC
- PLLs
- IO and Pad registers

For a full list of components that can be reset using the reset controller, see the register descriptions (Section 7.5.3, “List of Registers”).

When reset, components are held in reset at power-up. To use the component, software must deassert the reset.

NOTE

The SDK automatically deasserts some components after a reset.

7.5.2. Programmer’s model

The SDK uses the following struct to represent the resets registers:

SDK: https://github.com/raspberrypi/pico-sdk/blob/master/src/rp2350/hardware_structs/include/hardware/structs/resets.h Lines 63 - 159

```
63 typedef struct {
64     _REG_(RESETS_RESET_OFFSET) // RESETS_RESET
65     // 0x10000000 [28]    USBCTRL      (1)
66     // 0x08000000 [27]    UART1        (1)
67     // 0x04000000 [26]    UART0        (1)
68     // 0x02000000 [25]    TRNG         (1)
69     // 0x01000000 [24]    TIMER1       (1)
70     // 0x00800000 [23]    TIMER0       (1)
71     // 0x00400000 [22]    TBMAN        (1)
72     // 0x00200000 [21]    SYSINFO      (1)
73     // 0x00100000 [20]    SYSCFG       (1)
74     // 0x00080000 [19]    SPI1         (1)
75     // 0x00040000 [18]    SPI0         (1)
76     // 0x00020000 [17]    SHA256       (1)
77     // 0x00010000 [16]    PWM          (1)
78     // 0x00008000 [15]    PLL_USB      (1)
79     // 0x00004000 [14]    PLL_SYS      (1)
80     // 0x00002000 [13]    PIO2         (1)
81     // 0x00001000 [12]    PIO1         (1)
82     // 0x00000800 [11]    PIO0         (1)
83     // 0x00000400 [10]    PADS_QSPI    (1)
84     // 0x00000200 [9]     PADS_BANK0   (1)
85     // 0x00000100 [8]     JTAG         (1)
86     // 0x00000080 [7]     IO_QSPI      (1)
87     // 0x00000040 [6]     IO_BANK0     (1)
88     // 0x00000020 [5]     I2C1         (1)
89     // 0x00000010 [4]     I2C0         (1)
90     // 0x00000008 [3]     HSTX         (1)
```

```
    // 0x00000004 [2]     DMA          (1)
    // 0x00000002 [1]     BUSCTRL      (1)
    // 0x00000001 [0]     ADC          (1)
    io_rw_32 reset;

    _REG_(RESETS_WDSEL_OFFSET) // RESETS_WDSEL
    // 0x10000000 [28]    USBCTRL      (0)
    // 0x08000000 [27]    UART1        (0)
    // 0x04000000 [26]    UART0        (0)
    // 0x02000000 [25]    TRNG         (0)
    // 0x01000000 [24]    TIMER1       (0)
    // 0x00800000 [23]    TIMER0       (0)
    // 0x00400000 [22]    TBMAN        (0)
    // 0x00200000 [21]    SYSINFO      (0)
    // 0x00100000 [20]    SYSCFG       (0)
    // 0x00080000 [19]    SPI1         (0)
    // 0x00040000 [18]    SPI0         (0)
    // 0x00020000 [17]    SHA256       (0)
    // 0x00010000 [16]    PWM          (0)
    // 0x00008000 [15]    PLL_USB      (0)
    // 0x00004000 [14]    PLL_SYS      (0)
    // 0x00002000 [13]    PIO2         (0)
    // 0x00001000 [12]    PIO1         (0)
    // 0x00000800 [11]    PIO0         (0)
    // 0x00000400 [10]    PADS_QSPI    (0)
    // 0x00000200 [9]     PADS_BANK0   (0)
    // 0x00000100 [8]     JTAG         (0)
    // 0x00000080 [7]     IO_QSPI      (0)
    // 0x00000040 [6]     IO_BANK0     (0)
    // 0x00000020 [5]     I2C1         (0)
    // 0x00000010 [4]     I2C0         (0)
    // 0x00000008 [3]     HSTX         (0)
    // 0x00000004 [2]     DMA          (0)
    // 0x00000002 [1]     BUSCTRL      (0)
    // 0x00000001 [0]     ADC          (0)
    io_rw_32 wdsel;

    _REG_(RESETS_RESET_DONE_OFFSET) // RESETS_RESET_DONE
    // 0x10000000 [28]    USBCTRL      (0)
    // 0x08000000 [27]    UART1        (0)
    // 0x04000000 [26]    UART0        (0)
    // 0x02000000 [25]    TRNG         (0)
    // 0x01000000 [24]    TIMER1       (0)
    // 0x00800000 [23]    TIMER0       (0)
    // 0x00400000 [22]    TBMAN        (0)
    // 0x00200000 [21]    SYSINFO      (0)
    // 0x00100000 [20]    SYSCFG       (0)
    // 0x00080000 [19]    SPI1         (0)
    // 0x00040000 [18]    SPI0         (0)
    // 0x00020000 [17]    SHA256       (0)
    // 0x00010000 [16]    PWM          (0)
    // 0x00008000 [15]    PLL_USB      (0)
    // 0x00004000 [14]    PLL_SYS      (0)
    // 0x00002000 [13]    PIO2         (0)
    // 0x00001000 [12]    PIO1         (0)
    // 0x00000800 [11]    PIO0         (0)
    // 0x00000400 [10]    PADS_QSPI    (0)
    // 0x00000200 [9]     PADS_BANK0   (0)
    // 0x00000100 [8]     JTAG         (0)
    // 0x00000080 [7]     IO_QSPI      (0)
    // 0x00000040 [6]     IO_BANK0     (0)
    // 0x00000020 [5]     I2C1         (0)
    // 0x00000010 [4]     I2C0         (0)
    // 0x00000008 [3]     HSTX         (0)
```

```
155     // 0x00000004 [2]     DMA          (0)
156     // 0x00000002 [1]     BUSCTRL      (0)
157     // 0x00000001 [0]     ADC          (0)
158     io_ro_32 reset_done;
159 } resets_hw_t;
```

This struct defines the following registers:

- `reset`: This register contains a bit for each component that can be reset. When set to `1`, the reset is asserted. If the bit is cleared, the reset is deasserted.
- `wdsel`: This register contains a bit for each component that can be reset. When set to `1`, this component will reset if the watchdog fires. If you reset the power-on state machine, the entire reset controller will reset, which includes every component.
- `reset_done`: This register contains a bit for each component that is automatically set when the component is out of reset. This allows software to wait for this status bit in case the component requires initialisation before use.

The SDK defines reset functions as follows:

SDK: https://github.com/raspberrypi/pico-sdk/blob/master/src/rp2_common/hardware_resets/include/hardware/resets.h Lines 159 - 161

```
159 static __force_inline void reset_block(uint32_t bits) {
160     reset_block_mask(bits);
161 }
```

SDK: https://github.com/raspberrypi/pico-sdk/blob/master/src/rp2_common/hardware_resets/include/hardware/resets.h Lines 163 - 165

```
163 static __force_inline void unreset_block(uint32_t bits) {
164     unreset_block_mask(bits);
165 }
```

SDK: https://github.com/raspberrypi/pico-sdk/blob/master/src/rp2_common/hardware_resets/include/hardware/resets.h Lines 167 - 169

```
167 static __force_inline void unreset_block_wait(uint32_t bits) {
168     return unreset_block_mask_wait_blocking(bits);
169 }
```

One example use of reset functions is the UART driver, which defines a `uart_reset` function that selects a different bit of the reset register depending on the UART specified:

SDK: https://github.com/raspberrypi/pico-sdk/blob/master/src/rp2_common/hardware_uart/uart.c Lines 32 - 38

```
32 static inline void uart_reset(uart_inst_t *uart) {
33     reset_block_num(uart_get_reset_num(uart));
34 }
35
36 static inline void uart_unreset(uart_inst_t *uart) {
37     unreset_block_num_wait_blocking(uart_get_reset_num(uart));
38 }
```

7.5.3. List of Registers

The reset controller registers start at a base address of `0x40020000` (defined as RESETS_BASE in SDK).

Table 534. List of RESETS registers

Offset	Name	Info
0x0	RESET	
0x4	WDSEL	
0x8	RESET_DONE	

RESETS: RESET Register

Offset: 0x0

Table 535. RESET Register

Bits	Description	Type	Reset
31:29	Reserved.	-	-
28	**USBCTRL**	RW	0x1
27	**UART1**	RW	0x1
26	**UART0**	RW	0x1
25	**TRNG**	RW	0x1
24	**TIMER1**	RW	0x1
23	**TIMER0**	RW	0x1
22	**TBMAN**	RW	0x1
21	**SYSINFO**	RW	0x1
20	**SYSCFG**	RW	0x1
19	**SPI1**	RW	0x1
18	**SPI0**	RW	0x1
17	**SHA256**	RW	0x1
16	**PWM**	RW	0x1
15	**PLL_USB**	RW	0x1
14	**PLL_SYS**	RW	0x1
13	**PIO2**	RW	0x1
12	**PIO1**	RW	0x1
11	**PIO0**	RW	0x1
10	**PADS_QSPI**	RW	0x1
9	**PADS_BANK0**	RW	0x1
8	**JTAG**	RW	0x1
7	**IO_QSPI**	RW	0x1
6	**IO_BANK0**	RW	0x1
5	**I2C1**	RW	0x1
4	**I2C0**	RW	0x1
3	**HSTX**	RW	0x1
2	**DMA**	RW	0x1
1	**BUSCTRL**	RW	0x1

Bits	Description	Type	Reset
0	**ADC**	RW	0x1

RESETS: WDSEL Register

Offset: 0x4

Table 536. WDSEL Register

Bits	Description	Type	Reset
31:29	Reserved.	-	-
28	**USBCTRL**	RW	0x0
27	**UART1**	RW	0x0
26	**UART0**	RW	0x0
25	**TRNG**	RW	0x0
24	**TIMER1**	RW	0x0
23	**TIMER0**	RW	0x0
22	**TBMAN**	RW	0x0
21	**SYSINFO**	RW	0x0
20	**SYSCFG**	RW	0x0
19	**SPI1**	RW	0x0
18	**SPI0**	RW	0x0
17	**SHA256**	RW	0x0
16	**PWM**	RW	0x0
15	**PLL_USB**	RW	0x0
14	**PLL_SYS**	RW	0x0
13	**PIO2**	RW	0x0
12	**PIO1**	RW	0x0
11	**PIO0**	RW	0x0
10	**PADS_QSPI**	RW	0x0
9	**PADS_BANK0**	RW	0x0
8	**JTAG**	RW	0x0
7	**IO_QSPI**	RW	0x0
6	**IO_BANK0**	RW	0x0
5	**I2C1**	RW	0x0
4	**I2C0**	RW	0x0
3	**HSTX**	RW	0x0
2	**DMA**	RW	0x0
1	**BUSCTRL**	RW	0x0
0	**ADC**	RW	0x0

RESETS: RESET_DONE Register

Offset: 0x8

Table 537. RESET_DONE Register

Bits	Description	Type	Reset
31:29	Reserved.	-	-
28	**USBCTRL**	RO	0x0
27	**UART1**	RO	0x0
26	**UART0**	RO	0x0
25	**TRNG**	RO	0x0
24	**TIMER1**	RO	0x0
23	**TIMER0**	RO	0x0
22	**TBMAN**	RO	0x0
21	**SYSINFO**	RO	0x0
20	**SYSCFG**	RO	0x0
19	**SPI1**	RO	0x0
18	**SPI0**	RO	0x0
17	**SHA256**	RO	0x0
16	**PWM**	RO	0x0
15	**PLL_USB**	RO	0x0
14	**PLL_SYS**	RO	0x0
13	**PIO2**	RO	0x0
12	**PIO1**	RO	0x0
11	**PIO0**	RO	0x0
10	**PADS_QSPI**	RO	0x0
9	**PADS_BANK0**	RO	0x0
8	**JTAG**	RO	0x0
7	**IO_QSPI**	RO	0x0
6	**IO_BANK0**	RO	0x0
5	**I2C1**	RO	0x0
4	**I2C0**	RO	0x0
3	**HSTX**	RO	0x0
2	**DMA**	RO	0x0
1	**BUSCTRL**	RO	0x0
0	**ADC**	RO	0x0

7.6. Power-on resets and brownout detection

7.6.1. Power-on reset (POR)

The power-on reset block ensures the chip starts up cleanly when power is first applied. It accomplishes this by holding the chip in reset until the digital core supply (DVDD) reaches a voltage high enough to reliably power the chip's core logic. The block holds its por_n output low until DVDD exceeds the **power-on reset threshold** ($DVDD_{TH.POR}$) for a period greater than the **power-on reset assertion delay** ($t_{POR.ASSERT}$). Once high, por_n remains high even if DVDD subsequently falls below $DVDD_{TH.POR}$. The behaviour of por_n when power is applied is shown in Figure 28, "A power-on reset cycle".

Figure 28. A power-on reset cycle

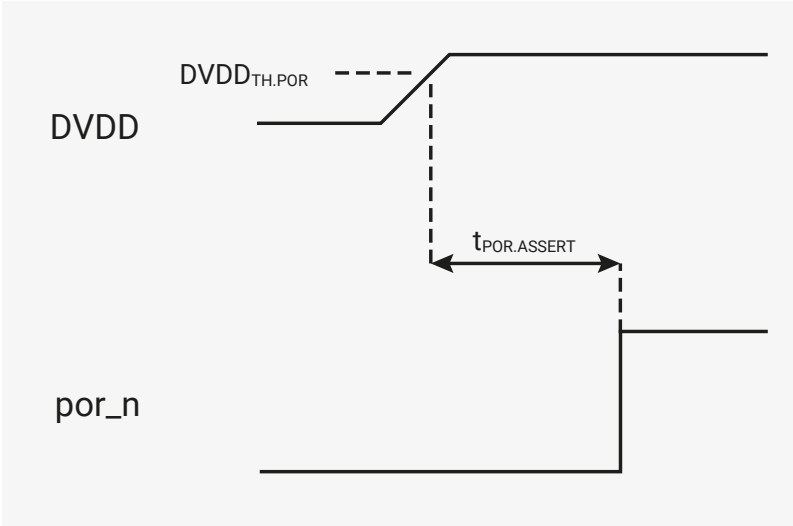

$DVDD_{TH.POR}$ is fixed at a nominal 0.957V, which should result in a threshold between 0.924V and 0.99V. The threshold assumes a nominal DVDD of 1.1V at initial power-on, and por_n may never go high if a lower voltage is used. Once the chip is out of reset, DVDD can be reduced without por_n going low.

7.6.1.1. Detailed specifications

Table 538. Power-on Reset Parameters

Parameter	Description	Min	Typ	Max	Units
$DVDD_{TH.POR}$	power-on reset threshold	0.924	0.957	0.99	V
$t_{POR.ASSERT}$	power-on reset assertion delay		3	10	µs

7.6.2. Brownout detection (BOD)

The brownout detection block prevents unreliable operation when the digital core supply (DVDD) drops below a safe operating level. If enabled, the block resets the chip by taking its bor_n output low when DVDD drops below the **brownout detection assertion threshold** ($DVDD_{TH.BOD.ASSERT}$) for a period greater than the **brownout detection assertion delay** ($t_{BOD.ASSERT}$). If DVDD subsequently rises above the **brownout detection de-assertion threshold** ($DVDD_{TH.BOD.DEASSERT}$) for a period greater than the **brownout detection de-assertion delay** ($t_{BOD.DEASSERT}$), the block releases reset by taking bor_n high. A brownout, followed by supply recovery, is shown in Figure 29, "A brownout detection cycle".

Figure 29. A brownout detection cycle

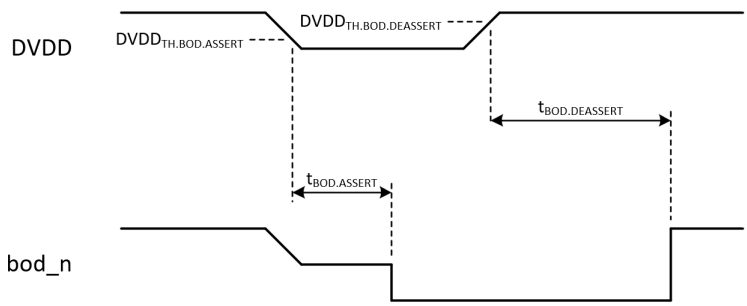

7.6.2.1. Detection enable

Brownout detection is always enabled at initial power-on. There is, however, a short delay, the **brownout detection activation delay** ($t_{BOD.ACTIVE}$), between `por_n` going high and detection becoming active. This is shown in Figure 30, "Activation of brownout detection at initial power-on and following a brownout event.".

Figure 30. Activation of brownout detection at initial power-on and following a brownout event.

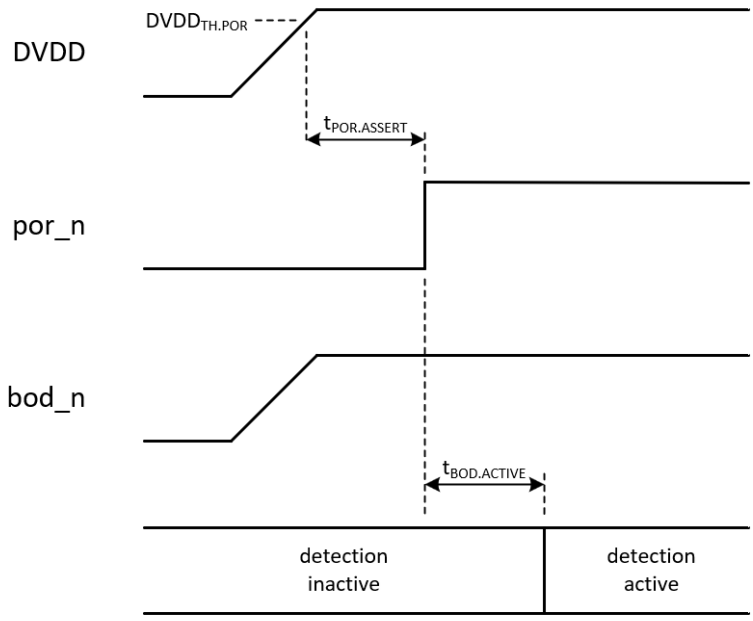

Once the chip is out of reset, detection can be disabled under software control. This saves a small amount of power. If detection is subsequently re-enabled, there will be another short delay, the **brownout detection enable delay** ($t_{BOD.ENABLE}$), before it becomes active again. This is shown in Figure 31, "Disabling and enabling brownout detection".

Detection is disabled by writing a `0` to the `EN` field in the `BOD` register and is re-enabled by writing a `1` to the same field. The block's `bod_n` output is high when detection is disabled.

Figure 31. Disabling and enabling brownout detection

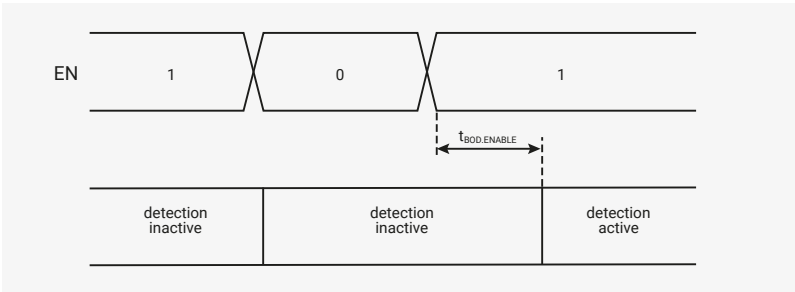

Detection is re-enabled if the BOD register is reset, as this sets the register's `EN` field to `1`. Again, detection will become

active after a delay equal to the brownout detection enable delay ($t_{BOD.ENABLE}$).

NOTE

If the BOD register is reset by a power-on or brownout-initiated reset, the delay between the register being reset and brownout detection becoming active will be equal to the brownout detection activation delay ($t_{BOD.ACTIVE}$). The delay will be equal to the brownout detection enable delay ($t_{BOD.ENABLE}$) for all other reset sources.

7.6.2.2. Adjusting the detection threshold

The **brownout detection threshold** ($DVDD_{TH.BOD}$) has a nominal value of 0.946V at initial power-on or after a reset event. This should result in a detection threshold between 0.913V and 0.979V. Once out of reset, the threshold can be adjusted under software control. The new detection threshold will take effect after the **brownout detection programming delay** (($t_{BOD.PROG}$). An example of this is shown in Figure 32, "Adjusting the brownout detection threshold".

The threshold is adjusted by writing to the VSEL field in the BOD register. See the BOD register description for details.

NOTE

The nominal supply voltage for DVDD is 1.1 V. You should not increase the brownout detection threshold above the nominal supply voltage.

Figure 32. Adjusting the brownout detection threshold

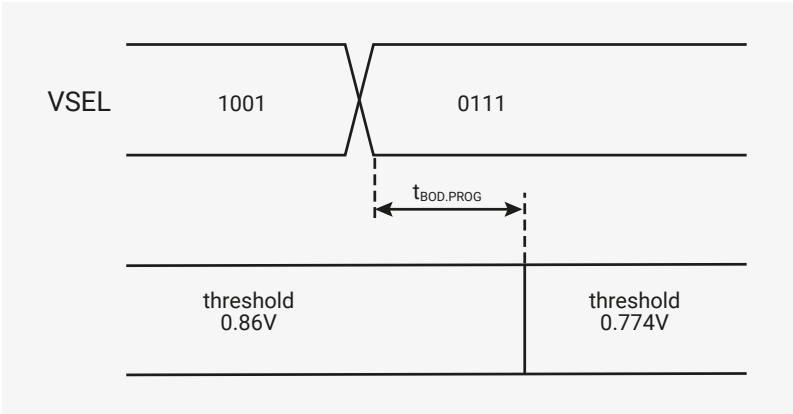

7.6.2.3. Detailed specifications

Table 539. Brownout Detection Parameters

Parameter	Description	Min	Typ	Max	Units
$DVDD_{TH.BOD.ASSERT}$	brownout detection assertion threshold	96.5	100	103.5	% of selected threshold voltage
$DVDD_{TH.BOD.DEASSERT}$	brownout detection de-assertion threshold	97.4	101	105	% of selected threshold voltage
$t_{BOD.ACTIVE}$	brownout detection activation delay		55	80	µs
$t_{BOD.ASSERT}$	brownout detection assertion delay		3	10	µs

Parameter	Description	Min	Typ	Max	Units
$t_{BOD.DEASSERT}$	brownout detection de-assertion delay		55	80	µs
$t_{BOD.ENABLE}$	brownout detection enable delay		35	55	µs
$t_{BOD.PROG}$	brownout detection programming delay		20	30	µs

7.6.3. Supply monitor

The power-on and brownout reset blocks are powered by the core voltage regulator's analogue supply (`VREG_AVDD`). The blocks are initialised when power is first applied, but may not be reliably re-initialised if power is removed and then reapplied before `VREG_AVDD` has dropped to a sufficiently low level. To prevent this happening, `VREG_AVDD` is monitored and the power-on reset block is re-initialised if it drops below the **VREG_AVDD activation threshold** ($VREG_AVDD_{TH.ACTIVE}$). $VREG_AVDD_{TH.ACTIVE}$ is fixed at a nominal 1.1V, which should result in a threshold between 0.87V and 1.26V. This threshold does not represent a safe operating voltage. Instead, it represents the voltage that `VREG_AVD` must drop below to reliably re-initialise the power-on reset block. For safe operation, `VREG_AVDD` must be at a nominal voltage of 3.3V. See Table 1441, "Power Supply Specifications".

7.6.3.1. Detailed specifications

Table 540. Voltage Regulator Input Supply Monitor Parameters

Parameter	Description	Min	Typ	Max	Units
$VREG_VIN_{TH.ACTIVE}$	`VREG_VIN` activation threshold	0.87	1.1	1.26	V

7.6.4. List of registers

The chip-level reset subsystem shares a register address space with other power management subsystems in the always-on domain. The address space is referred to as `POWMAN` elsewhere in this document. A complete list of `POWMAN` registers is provided in Section 6.4, "Power management (POWMAN) registers", but information on registers associated with the brownout detector are repeated here.

The `POWMAN` registers start at a base address of `0x40100000` (defined as POWMAN_BASE in SDK).

- BOD_CTRL
- BOD
- BOD_LP_ENTRY
- BOD_LP_EXIT