*Table 1097. IC_COMP_TYPE Register*

| Bits | Description | Type | Reset |
|---|---|---|---|
| 31:0 | **IC_COMP_TYPE**: Designware Component Type number = 0x44_57_01_40. This assigned unique hex value is constant and is derived from the two ASCII letters 'DW' followed by a 16-bit unsigned number. | RO | 0x44570140 |

# 12.3. SPI

**Arm Documentation**

Excerpted from the ARM PrimeCell Synchronous Serial Port (PL022) Technical Reference Manual. Used with permission.

RP2350 has two identical SPI controllers, both based on an Arm Primecell Synchronous Serial Port (SSP) (PL022) (Revision r1p4). This is distinct from the QSPI memory interface covered in Section 12.14.

Each controller supports the following features:

- Master or Slave modes
  - Motorola SPI-compatible interface
  - Texas Instruments synchronous serial interface
  - National Semiconductor Microwire interface
- 8-location TX and RX FIFOs
- Interrupt generation to service FIFOs or indicate error conditions
- Can be driven from DMA
- Programmable clock rate
- Programmable data size 4-16 bits

Each controller can be connected to a number of GPIO pins as defined in the Bank 0 GPIO function table, Table 646 (Section 9.4).

The entries in the GPIO function table, such as "SPI0 TX", specify the SPI instance and the SPI signal for that instance which are available on that GPIO. The signals in the table are described as:

**SCK**

Serial clock. Connects to the SPI peripheral clock signals described as `SSPCLKOUT` and `SSPCLKIN` in the following sections. These pins are inputs in slave mode, and outputs in master mode.

**TX**

Serial data output. Connects to the SPI peripheral `SSPTXD` (data out) and `nSSPOE` (output enable) signals described in the following sections. This is always a data output, independent of the bus role. The SPI peripheral controls tristating depending on chip select status.

**RX**

Serial data input. Connects to the SPI peripheral `SSPRXD` data input described in the following sections. This is always a data input, independent of the bus role.

**CSn**

Active-low chip select. Connects to the SPI peripheral signals `SSPFSSOUT` and `SSPFSSIN` described in the followinsg sections. These pins are inputs in slave mode, and outputs in master mode.

The SPI uses `clk_peri` as its reference clock for SPI timing, and is referred to as `SSPCLK` in the following sections. `clk_sys` is used as the bus clock, and is referred to as PCLK in the following sections (also see Figure 33).

### 12.3.1. Changes from RP2040

The output enable of the `SSPTXD` data output (connecting to pins listed as SPI0 TX and SPI1 TX in the GPIO function tables) is controlled by the SPI peripheral `nSSPOE` signal. The peripheral automatically tristates its output when deselected in slave mode. This makes software control of the output enable unnecessary even when multiple slaves share the data lines.

### 12.3.2. Overview

The PrimeCell SSP is a master or slave interface for synchronous serial communication with peripheral devices that have Motorola SPI, National Semiconductor Microwire, or Texas Instruments synchronous serial interfaces.

The PrimeCell SSP performs serial-to-parallel conversion on data received from a peripheral device. The CPU accesses data, control, and status information through the AMBA APB interface. The transmit and receive paths are buffered with internal FIFO memories, enabling up to eight 16-bit values to be stored independently in both transmit and receive modes. Serial data transmits on `SSPTXD` and is received on `SSPRXD`.

The PrimeCell SSP includes a programmable bit rate clock divider and prescaler to generate the serial output clock, `SSPCLKOUT`, from the input clock, `SSPCLK`. Bit rates are supported to 2MHz and higher, subject to choice of frequency for `SSPCLK`, and the maximum bit rate is determined by peripheral devices.

You can use the control registers `SSPCR0` and `SSPCR1` to program the PrimeCell SSP operating mode, frame format, and size.

The following individually maskable interrupts are generated:

- `SSPTXINTR` requests servicing of the transmit buffer
- `SSPRXINTR` requests servicing of the receive buffer
- `SSPRORINTR` indicates an overrun condition in the receive FIFO
- `SSPRTINTR` indicates that a timeout period expired while data was present in the receive FIFO.

A single combined interrupt is asserted if any of the individual interrupts are asserted and unmasked. This interrupt is connected to the processor interrupt controllers in RP2350.

In addition to the above interrupts, a set of DMA signals are provided for interfacing with a DMA controller.

Depending on the operating mode selected, the SSPFSSOUT output operates as:

- an active-HIGH frame synchronization output for Texas Instruments synchronous serial frame format
- an active-LOW slave select for SPI and Microwire.

### 12.3.3. Functional description

*Figure 91. PrimeCell SSP block diagram. For clarity, does not show the test logic.*

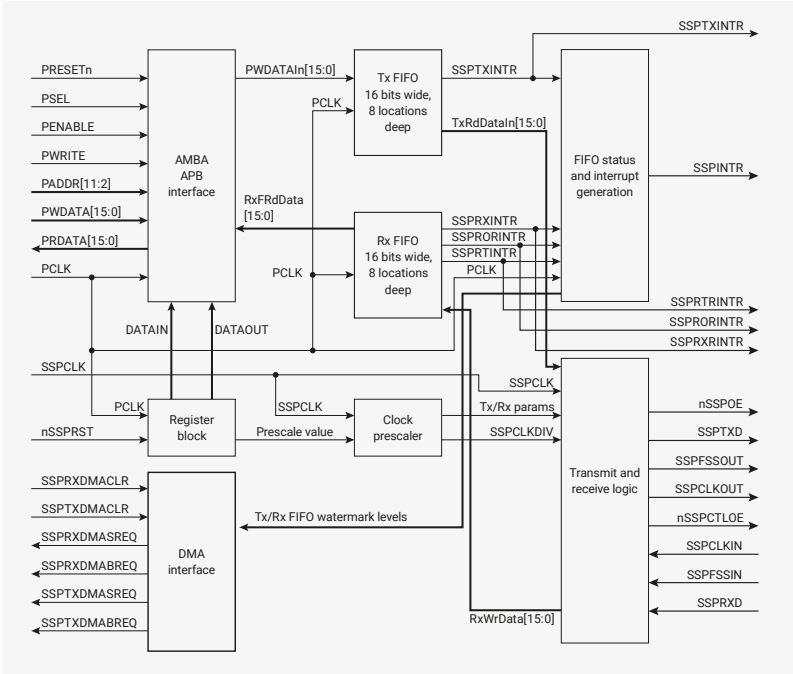


### 12.3.3.1. AMBA APB interface

The AMBA APB interface generates read and write decodes for accesses to status and control registers, and transmit and receive FIFO memories.

### 12.3.3.2. Register block

The register block stores data written, or to be read, across the AMBA APB interface.

### 12.3.3.3. Clock prescaler

When configured as a master, an internal prescaler, comprising two free-running reloadable serially linked counters, provides the serial output clock `SSPCLKOUT`.

You can program the clock prescaler, using the `SSPCPSR` register, to divide `SSPCLK` by a factor of 2-254 in steps of two. By not utilizing the least significant bit of the `SSPCPSR` register, division by an odd number is not possible; this ensures that a symmetrical clock with equal mark-space ratio is generated. See SSPCPSR.

The output of the prescaler is divided again by a factor of 1-256, by programming the SSPCR0 control register, to give the final master output clock `SSPCLKOUT`.

**NOTE**

The PCLK and SSPCLK clock inputs in Figure 91 are connected to the `clk_sys` and `clk_peri` system-level clock nets on RP2350, respectively. By default, `clk_peri` attaches directly to the system clock. However, you can detach it to maintain constant SPI frequency if the system clock is varied dynamically. See Figure 33 for an overview of the RP2350 clock architecture.

### 12.3.3.4. Transmit FIFO

The common transmit (TX) FIFO is a 16-bit wide, 8-location deep memory buffer. CPU data written across the AMBA

APB interface is stored in the buffer until read out by the transmit logic.

When configured as a master or a slave, parallel data is written into the transmit FIFO prior to serial conversion, and transmission to the attached slave or master respectively, through the `SSPTXD` pin.

#### 12.3.3.5. Receive FIFO

The common receive (RX) FIFO is a 16-bit wide, 8-location deep memory buffer. Received data from the serial interface is stored in the buffer until read out by the CPU across the AMBA APB interface.

When configured as a master or slave, serial data received through the `SSPRXD` pin is registered prior to parallel loading into the attached slave or master receive FIFO respectively.

#### 12.3.3.6. Transmit and receive logic

When configured as a master, the clock for the attached slaves is derived from a divided-down version of `SSPCLK` through the previously described prescaler operations. The master transmit logic successively reads a value from its transmit FIFO and performs parallel to serial conversion on it. Then, the serial data stream and frame control signal, synchronized to `SSPCLKOUT`, outputs through the `SSPTXD` pin to the attached slaves. The master receive logic performs serial to parallel conversion on the incoming synchronous `SSPRXD` data stream, extracting and storing values into its receive FIFO for subsequent reading through the APB interface.

When configured as a slave, the `SSPCLKIN` clock is provided by an attached master and used to time transmission and reception sequences. The slave transmit logic, under control of the master clock, successively:

1. Reads a value from its transmit FIFO.
2. Performs parallel to serial conversion.
3. Outputs the serial data stream and frame control signal through the slave `SSPTXD` pin.

The slave receive logic performs serial to parallel conversion on the incoming `SSPRXD` data stream, extracting and storing values into its receive FIFO, for subsequent reading through the APB interface.

#### 12.3.3.7. Interrupt generation logic

The PrimeCell SSP generates four individual maskable, active-HIGH interrupts. A combined interrupt output is generated as an OR function of the individual interrupt requests.

The transmit and receive dynamic data-flow interrupts, `SSPTXINTR` and `SSPRXINTR`, are separated from the status interrupts so that data can be read or written in response to the FIFO trigger levels.

#### 12.3.3.8. DMA interface

The PrimeCell SSP provides an interface to connect to a DMA controller, see Section 12.3.4.16.

#### 12.3.3.9. Synchronizing registers and logic

The PrimeCell SSP supports both asynchronous and synchronous operation of the clocks, `PCLK` and `SSPCLK`. Synchronization registers and handshaking logic have been implemented, and are active at all times. Synchronization of control signals is performed on both directions of data flow, that is:

- from the `PCLK` to the `SSPCLK` domain
- from the `SSPCLK` to the `PCLK` domain.

## 12.3.4. Operation

### 12.3.4.1. Interface reset

The PrimeCell SSP is reset by the global reset signal, PRESETn, and a block-specific reset signal, nSSPRST. The device reset controller asserts nSSPRST asynchronously and negates it synchronously to SSPCLK.

### 12.3.4.2. Configuring the SSP

Following reset, the PrimeCell SSP logic is disabled and must be configured when in this state. It is necessary to program control registers SSPCR0 and SSPCR1 to configure the peripheral as a master or slave operating under one of the following protocols:

- Motorola SPI
- Texas Instruments SSI
- National Semiconductor

The bit rate, derived from the external SSPCLK, requires the programming of the clock prescale register SSPCPSR.

### 12.3.4.3. Enable PrimeCell SSP operation

You can either prime the transmit FIFO, by writing up to eight 16-bit values when the PrimeCell SSP is disabled, or permit the transmit FIFO service request to interrupt the CPU. Once enabled, transmission or reception of data begins on the transmit, SSPTXD, and receive, SSPRXD, pins.

### 12.3.4.4. Clock ratios

There is a constraint on the ratio of the frequencies of PCLK to SSPCLK. The frequency of SSPCLK must be less than or equal to that of PCLK. This ensures that control signals from the SSPCLK domain to the PCLK domain are guaranteed to get synchronized before one frame duration:

$F_{SSPCLK} <= F_{PCLK}$.

In the slave mode of operation, the SSPCLKIN signal from the external master is double-synchronized and then delayed to detect an edge. It takes three SSPCLKs to detect an edge on SSPCLKIN. SSPTXD has less setup time to the falling edge of SSPCLKIN on which the master is sampling the line.

The setup and hold times on SSPRXD, with reference to SSPCLKIN, must be more conservative to ensure that it is at the right value when the actual sampling occurs within the SSPMS. To ensure correct device operation, SSPCLK must be at least 12 times faster than the maximum expected frequency of SSPCLKIN.

The frequency selected for SSPCLK must accommodate the desired range of bit clock rates. The ratio of minimum SSPCLK frequency to SSPCLKOUT maximum frequency in the case of the slave mode is 12, and for the master mode, it is two.

For example, at the maximum SSPCLK (clk_peri) frequency on RP2350 of 150MHz, the maximum peak bit rate in master mode is 70.5Mb/s. This is achieved with the SSPCPSR register programmed with a value of 2, and the SCR[7:0] field in the SSPCR0 register programmed with a value of 0.

In slave mode, the same maximum SSPCLK frequency of 150MHz can achieve a peak bit rate of 150 / 12 = 12.5Mb/s. The SSPCPSR register can be programmed with a value of 12, and the SCR[7:0] field in the SSPCR0 register can be programmed with a value of 0. Similarly, the ratio of SSPCLK maximum frequency to SSPCLKOUT minimum frequency is 254 × 256.

The minimum frequency of SSPCLK is governed by the following inequalities, both of which must be satisfied:

$F_{SSPCLK}(min) \geq 2 \times F_{SSPCLKOUT}(max)$, for master mode

$F_{SSPCLK}(min) \geq 12 \times F_{SSPCLKIN}(max)$, for slave mode.

The maximum frequency of SSPCLK is governed by the following inequalities, both of which must be satisfied:

$F_{SSPCLK}(max) \leq 254 \times 256 \times F_{SSPCLKOUT}(min)$, for master mode

$F_{SSPCLK}(max) \leq 254 \times 256 \times F_{SSPCLKIN}(min)$, for slave mode.

### 12.3.4.5. Programming the SSPCR0 control register

The SSPCR0 register is used to:

- program the serial clock rate
- select one of the three protocols
- select the data word size, where applicable.

The Serial Clock Rate (SCR) value, in conjunction with the SSPCPSR clock prescale divisor value, CPSDVSR, is used to derive the PrimeCell SSP transmit and receive bit rate from the external SSPCLK.

The frame format is programmed through the FRF bits, and the data word size through the DSS bits.

Bit phase and polarity, applicable to Motorola SPI format only, are programmed through the SPH and SPO bits.

### 12.3.4.6. Programming the SSPCR1 control register

The SSPCR1 register is used to:

- select master or slave mode
- enable a loop back test feature
- enable the PrimeCell SSP peripheral.

To configure the PrimeCell SSP as a master, clear the SSPCR1 register master or slave selection bit, MS, to 0. This is the default value on reset.

Setting the SSPCR1 register MS bit to 1 configures the PrimeCell SSP as a slave. When configured as a slave, use the SSPCR1 slave mode SSPTXD output disable bit (SOD) to enable or disable of the PrimeCell SSP SSPTXD signal. You can use this in some multi-slave environments where masters might parallel broadcast.

To enable the PrimeCell SSP, set the Synchronous Serial Port Enable (SSE) bit to 1.

#### 12.3.4.6.1. Bit rate generation

The serial bit rate is derived by dividing down the input clock, SSPCLK. The clock is first divided by an even prescale value CPSDVSR in the range 2-254, and is programmed in SSPCPSR. The clock is divided again by a value in the range 1-256, that is 1 + SCR, where SCR is the value programmed in SSPCR0.

The following equation defines the frequency of the output signal bit clock, SSPCLKOUT:

$$F_{SSPCLKOUT} = \frac{F_{SSPCLK}}{CPSDVSR \times (1 + SCR)}$$

For example, if SSPCLK is 125MHz, and CPSDVSR = 2, then SSPCLKOUT has a frequency range from 244kHz - 62.5MHz.

### 12.3.4.7. Frame format

Each data frame is between 4-16 bits long, depending on the size of data programmed, and is transmitted starting with the MSB. You can select the following basic frame types:

- Texas Instruments synchronous serial
- Motorola SPI
- National Semiconductor Microwire.

For all formats, the serial clock, SSPCLKOUT, is held inactive while the PrimeCell SSP is idle, and transitions at the programmed frequency only during active transmission or reception of data. The idle state of SSPCLKOUT is utilized to provide a receive timeout indication that occurs when the receive FIFO still contains data after a timeout period.

For Motorola SPI and National Semiconductor Microwire frame formats, the serial frame, SSPFSSOUT, pin is active-LOW, and is asserted, pulled-down, during the entire transmission of the frame.

For Texas Instruments synchronous serial frame format, the SSPFSSOUT pin is pulsed for one serial clock period, starting at its rising edge, prior to the transmission of each frame. For this frame format, both the PrimeCell SSP and the off-chip slave device drive their output data on the rising edge of SSPCLKOUT, and latch data from the other device on the falling edge.

Unlike the full-duplex transmission of the other two frame formats, the National Semiconductor Microwire format uses a special master-slave messaging technique that operates at half-duplex. In this mode, when a frame begins, an 8-bit control message is transmitted to the off-chip slave. During this transmit, the SSS receives no incoming data. After the message has been sent, the off-chip slave decodes it and, after waiting one serial clock after the last bit of the 8-bit control message has been sent, responds with the requested data. The returned data can be 4-16 bits in length, making the total frame length in the range 13-25 bits.

### 12.3.4.8. Texas Instruments synchronous serial frame format

Figure 92 shows the Texas Instruments synchronous serial frame format for a single transmitted frame.

*Figure 92. Texas Instruments synchronous serial frame format, single transfer*

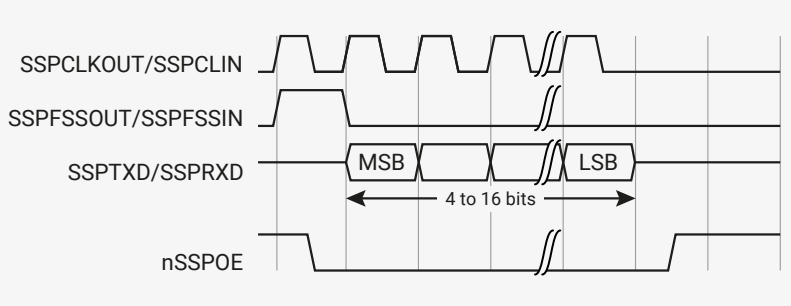


In this mode, SSPCLKOUT and SSPFSSOUT are forced LOW, and the transmit data line, SSPTXD is tristated whenever the PrimeCell SSP is idle. When the bottom entry of the transmit FIFO contains data, SSPFSSOUT is pulsed HIGH for one SSPCLKOUT period. The value to be transmitted is also transferred from the transmit FIFO to the serial shift register of the transmit logic. On the next rising edge of SSPCLKOUT, the MSB of the 4-bit to 16-bit data frame is shifted out on the SSPTXD pin. In a similar way, the MSB of the received data is shifted onto the SSPRXD pin by the off-chip serial slave device.

Both the PrimeCell SSP and the off-chip serial slave device then clock each data bit into their serial shifter on the falling edge of each SSPCLKOUT. The received data is transferred from the serial shifter to the receive FIFO on the first rising edge of PCLK after the LSB has been latched.

Figure 93 shows the Texas Instruments synchronous serial frame format when back-to-back frames are transmitted.

*Figure 93. Texas Instruments synchronous serial frame format, continuous transfer*

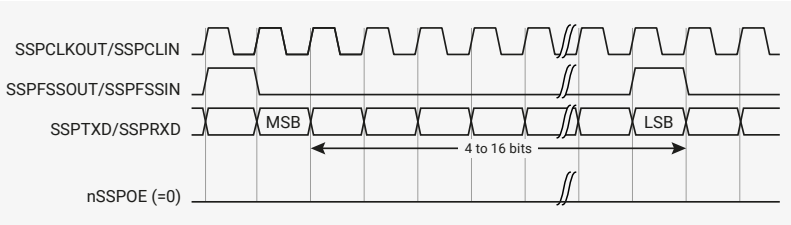

### 12.3.4.9. Motorola SPI frame format

The Motorola SPI interface is a four-wire interface where the SSPFSSOUT signal behaves as a slave select. The main feature of the Motorola SPI format is that you can program the inactive state and phase of the SSPCLKOUT signal using the SPO and SPH bits of the SSPSCR0 control register.

#### 12.3.4.9.1. SPO, clock polarity

When the SPO clock polarity control bit is LOW, it produces a steady state LOW value on the SSPCLKOUT pin. If the SPO clock polarity control bit is HIGH, a steady state HIGH value is placed on the SSPCLKOUT pin when data is not being transferred.

#### 12.3.4.9.2. SPH, clock phase

The SPH control bit selects the clock edge that captures data and enables it to change state. It has the most impact on the first bit transmitted by either permitting or not permitting a clock transition before the first data capture edge.

When the SPH phase control bit is LOW, data is captured on the first clock edge transition.

When the SPH clock phase control bit is HIGH, data is captured on the second clock edge transition.

### 12.3.4.10. Motorola SPI format with SPO=0, SPH=0

Figure 94 and Figure 95 shows a continuous transmission signal sequence for Motorola SPI frame format with SPO=0, SPH=0. Figure 94 shows a single transmission signal sequence for Motorola SPI frame format with SPO=0, SPH=0.

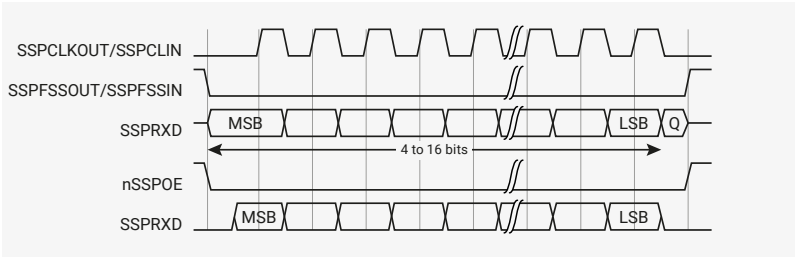


*Figure 94. Motorola SPI frame format, single transfer, with SPO=0 and SPH=0*

Figure 95 shows a continuous transmission signal sequence for Motorola SPI frame format with SPO=0, SPH=0.

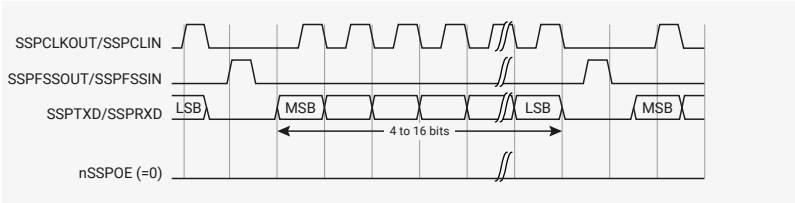


*Figure 95. Motorola SPI frame format, single transfer, with SPO=0 and SPH=0*

In this configuration, during idle periods:

- the SSPCLKOUT signal is forced LOW
- the SSPFSSOUT signal is forced HIGH
- the transmit data line SSPTXD is arbitrarily forced LOW
- the nSSPOE pad enable signal is forced HIGH (this is not connected to the pad in RP2350)
- when the PrimeCell SSP is configured as a master, the nSSPCTLOE line is driven LOW, enabling the SSPCLKOUT pad, active-LOW enable
- when the PrimeCell SSP is configured as a slave, the nSSPCTLOE line is driven HIGH, disabling the SSPCLKOUT pad, active-LOW enable

If the PrimeCell SSP is enable, and there is valid data within the transmit FIFO, the start of transmission is signified by the SSPFSSOUT master signal being driven LOW. This causes slave data to be enabled onto the SSPRXD input line of the master. The nSSPOE line is driven LOW, enabling the master SSPTXD output pad.

One-half SSPCLKOUT period later, valid master data is transferred to the SSPTXD pin. Now that both the master and slave data have been set, the SSPCLKOUT master clock pin goes HIGH after one additional half SSPCLKOUT period.

The data is now captured on the rising and propagated on the falling edges of the SSPCLKOUT signal.

In the case of a single word transmission, after all bits of the data word have been transferred, the SSPFSSOUT line is returned to its idle HIGH state one SSPCLKOUT period after the last bit has been captured.

However, in the case of continuous back-to-back transmissions, the SSPFSSOUT signal pulse HIGH between each data word transfer. This is because the slave select pin freezes the data in its serial peripheral register and does not permit it to be altered if the SPH bit is logic zero. Therefore, the master device must raise the SSPFSSIN pin of the slave device between each data transfer to enable the serial peripheral data write. On completion of the continuous transfer, the SSPFSSOUT pin is returned to its idle state one SSPCLKOUT period after the last bit has been captured.

### 12.3.4.11. Motorola SPI format with SPO=0, SPH=1

Figure 96 shows the transfer signal sequence for Motorola SPI format with SPO=0, SPH=1, and it covers both single and continuous transfers.

*Figure 96. Motorola SPI frame format with SPO=0 and SPH=1, single and continuous transfers*

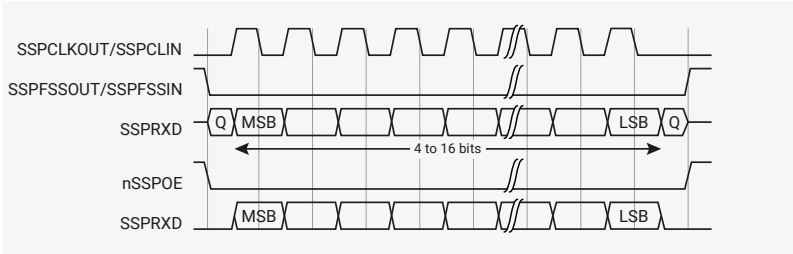


In this configuration, during idle periods:

- the SSPCLKOUT signal is forced LOW
- The SSPFSSOUT signal is forced HIGH
- the transmit data line SSPTXD is arbitrarily forced LOW
- the nSSPOE pad enable signal is forced HIGH (not connected to the pad in RP2350)
- when the PrimeCell SSP is configured as a master, the nSSPCTLOE line is driven LOW, enabling the SSPCLKOUT pad, active-LOW enable
- when the PrimeCell SSP is configured as a slave, the nSSPCTLOE line is driven HIGH, disabling the SSPCLKOUT pad, active-LOW enable

If the PrimeCell SSP is enabled, and there is valid data within the transmit FIFO, the start of transmission is signified by the SSPFSSOUT master signal being driven LOW. The nSSPOE line is driven LOW, enabling the master SSPTXD output pad. After an additional one half SSPCLKOUT period, both master and slave valid data is enabled onto their respective transmission lines. At the same time, the SSPCLKOUT is enabled with a rising edge transition.

Data is then captured on the falling edges and propagated on the rising edges of the SSPCLKOUT signal.

In the case of a single word transfer, after all bits have been transferred, the SSPFSSOUT line is returned to its idle HIGH state one SSPCLKOUT period after the last bit has been captured. For continuous back-to-back transfers, the SSPFSSOUT pin is held LOW between successive data words and termination is the same as that of the single word transfer.

### 12.3.4.12. Motorola SPI format with SPO=1, SPH=0

Figure 97 and Figure 98 show single and continuous transmission signal sequences for Motorola SPI format with SPO=1, SPH=0.

Figure 97 shows a single transmission signal sequence for Motorola SPI format with SPO=1, SPH=0.

*Figure 97. Motorola SPI frame format, single transfer, with SPO=1 and SPH=0*

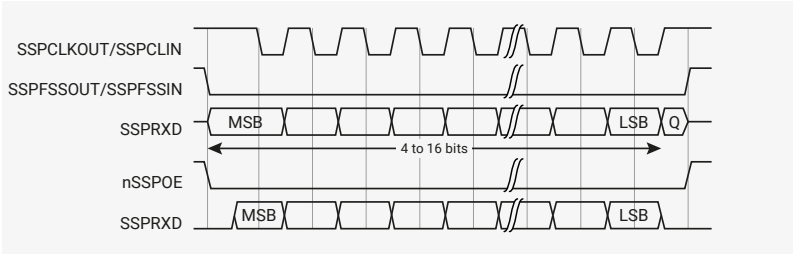


Figure 98 shows a continuous transmission signal sequence for Motorola SPI format with SPO=1, SPH=0.

**NOTE**

In Figure 97, Q is an undefined signal.

*Figure 98. Motorola SPI frame format, continuous transfer, with SPO=1 and SPH=0*

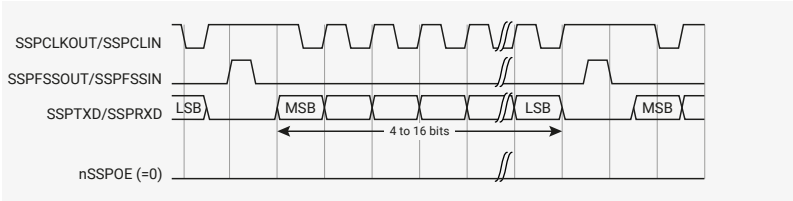


In this configuration, during idle periods:

- the SSPCLKOUT signal is forced HIGH
- the SSPFSSOUT signal is forced HIGH
- the transmit data line SSPTXD is arbitrarily forced LOW
- the nSSPOE pad enable signal is forced HIGH (not connected to the pad in RP2350)
- when the PrimeCell SSP is configured as a master, the nSSPCTLOE line is driven LOW, enabling the SSPCLKOUT pad, active-LOW enable
- when the PrimeCell SSP is configured as a slave, the nSSPCTLOE line is driven HIGH, disabling the SSPCLKOUT pad, active-LOW enable

If the PrimeCell SSP is enabled, and there is valid data within the transmit FIFO, the start of transmission is signified by the SSPFSSOUT master signal being driven LOW, and this causes slave data to be immediately transferred onto the SSPRXD line of the master. The nSSPOE line is driven LOW, enabling the master SSPTXD output pad.

One half period later, valid master data is transferred to the SSPTXD line. Now that both the master and slave data have been set, the SSPCLKOUT master clock pin becomes LOW after one additional half SSPCLKOUT period. This means that data is captured on the falling edges and be propagated on the rising edges of the SSPCLKOUT signal.

In the case of a single word transmission, after all bits of the data word are transferred, the SSPFSSOUT line is returned to its idle HIGH state one SSPCLKOUT period after the last bit has been captured.

However, in the case of continuous back-to-back transmissions, the SSPFSSOUT signal must be pulsed HIGH between each data word transfer. This is because the slave select pin freezes the data in its serial peripheral register and does not permit it to be altered if the SPH bit is logic zero. Therefore, the master device must raise the SSPFSSIN pin of the slave device between each data transfer to enable the serial peripheral data write. On completion of the continuous transfer, the SSPFSSOUT pin is returned to its idle state one SSPCLKOUT period after the last bit has been captured.

### 12.3.4.13. Motorola SPI format with SPO=1, SPH=1

Figure 99 shows the transfer signal sequence for Motorola SPI format with SPO=1, SPH=1, and it covers both single and continuous transfers.

*Figure 99. Motorola SPI frame format with SPO=1 and SPH=1, single and continuous transfers*

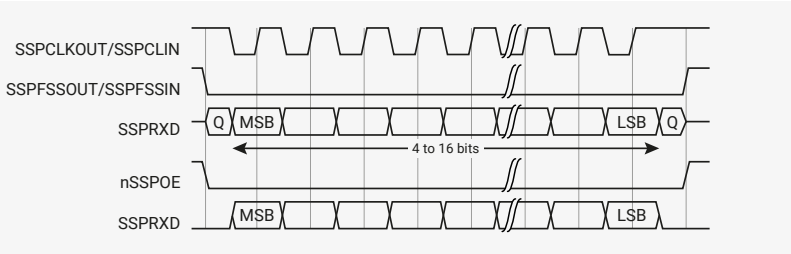


**NOTE**

In Figure 99, Q is an undefined signal.

In this configuration, during idle periods:

- the SSPCLKOUT signal is forced HIGH
- the SSPFSSOUT signal is forced HIGH
- the transmit data line SSPTXD is arbitrarily forced LOW
- the nSSPOE pad enable signal is forced HIGH (not connected to the pad in RP2350)
- when the PrimeCell SSP is configured as a master, the nSSPCTLOE line is driven LOW, enabling the SSPCLKOUT pad, active-LOW enable
- when the PrimeCell SSP is configured as a slave, the nSSPCTLOE line is driven HIGH, disabling the SSPCLKOUT pad, active-LOW enable.

If the PrimeCell SSP is enabled, and there is valid data within the transmit FIFO, the start of transmission is signified by the SSPFSSOUT master signal being driven LOW. The nSSPOE line is driven LOW, enabling the master SSPTXD output pad. After an additional one half SSPCLKOUT period, both master and slave data are enabled onto their respective transmission lines. At the same time, the SSPCLKOUT is enabled with a falling edge transition. Data is then captured on the rising edges and propagated on the falling edges of the SSPCLKOUT signal.

After all bits have been transferred, in the case of a single word transmission, the SSPFSSOUT line is returned to its idle HIGH state one SSPCLKOUT period after the last bit has been captured.

For continuous back-to-back transmissions, the SSPFSSOUT pin remains in its active-LOW state, until the final bit of the last word has been captured, and then returns to its idle state as the previous section describes.

For continuous back-to-back transfers, the SSPFSSOUT pin is held LOW between successive data words and termination is the same as that of the single word transfer.

### 12.3.4.14. National Semiconductor Microwire frame format

Figure 100 shows the National Semiconductor Microwire frame format for a single frame. Figure 101 shows the same format when back to back frames are transmitted.

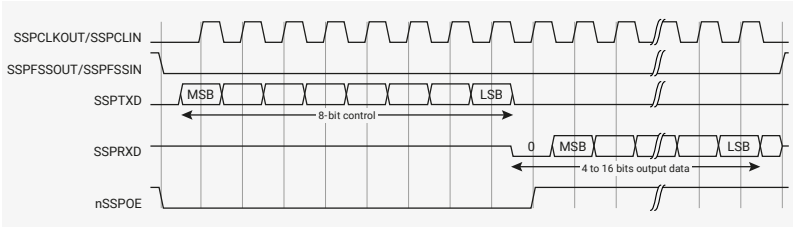


*Figure 100. Microwire frame format, single transfer*

Microwire format is very similar to SPI format, except that transmission is half-duplex instead of full-duplex, using a master-slave message passing technique. Each serial transmission begins with an 8-bit control word that is transmitted from the PrimeCell SSP to the off-chip slave device. During this transmission, the PrimeCell SSP receives no incoming data. After the message has been sent, the off-chip slave decodes it and, after waiting one serial clock after the last bit of the 8-bit control message has been sent, responds with the required data. The returned data is 4 to 16 bits in length, making the total frame length in the range 13-25 bits.

In this configuration, during idle periods:

- `SSPCLKOUT` is forced LOW
- `SSPFSSOUT` is forced HIGH
- the transmit data line, `SSPTXD`, is arbitrarily forced LOW
- the `nSSPOE` pad enable signal is forced HIGH (not connected to the pad in RP2350)

A transmission is triggered by writing a control byte to the transmit FIFO. The falling edge of `SSPFSSOUT` causes the value contained in the bottom entry of the transmit FIFO to be transferred to the serial shift register of the transmit logic, and the MSB of the 8-bit control frame to be shifted out onto the `SSPTXD` pin. `SSPFSSOUT` remains LOW for the duration of the frame transmission. The `SSPRXD` pin remains tristated during this transmission.

The off-chip serial slave device latches each control bit into its serial shifter on the rising edge of each `SSPCLKOUT`. After the last bit is latched by the slave device, the control byte is decoded during a one clock wait-state, and the slave responds by transmitting data back to the PrimeCell SSP. Each bit is driven onto `SSPRXD` line on the falling edge of `SSPCLKOUT`. The PrimeCell SSP in turn latches each bit on the rising edge of `SSPCLKOUT`. At the end of the frame, for single transfers, the `SSPFSSOUT` signal is pulled HIGH one clock period after the last bit has been latched in the receive serial shifter, that causes the data to be transferred to the receive FIFO.

**NOTE**

> The off-chip slave device can tristate the receive line either on the falling edge of `SSPCLKOUT` after the LSB has been latched by the receive shifter, or when the `SSPFSSOUT` pin goes HIGH.

For continuous transfers, data transmission begins and ends in the same manner as a single transfer. However, the `SSPFSSOUT` line is continuously asserted, held LOW, and transmission of data occurs back-to-back. The control byte of the next frame follows directly after the LSB of the received data from the current frame. Each of the received values is transferred from the receive shifter on the falling edge `SSPCLKOUT`, after the LSB of the frame has been latched into the PrimeCell SSP.

Figure 101 shows the National Semiconductor Microwire frame format when back-to-back frames are transmitted.

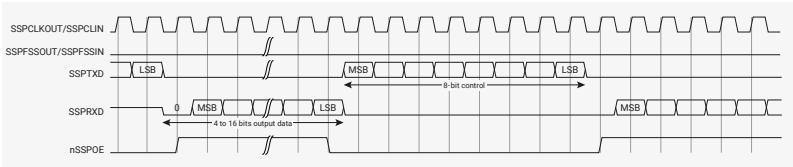


*Figure 101. Microwire frame format, continuous transfers*

In Microwire mode, the PrimeCell SSP slave samples the first bit of receive data on the rising edge of `SSPCLKIN` after `SSPFSSIN` has gone LOW. Masters that drive a free-running `SSPCKLIN` must ensure that the `SSPFSSIN` signal has sufficient setup and hold margins with respect to the rising edge of `SSPCLKIN`.

Figure 102 shows these setup and hold time requirements.

With respect to the SSPCLKIN rising edge on which the first bit of receive data is to be sampled by the PrimeCell SSP slave, SSPFSSIN must have a setup of at least two times the period of SSPCLK on which the PrimeCell SSP operates.

With respect to the SSPCLKIN rising edge previous to this edge, SSPFSSIN must have a hold of at least one SSPCLK period.

*Figure 102. Microwire frame format, SSPFSSIN input setup and hold requirements*

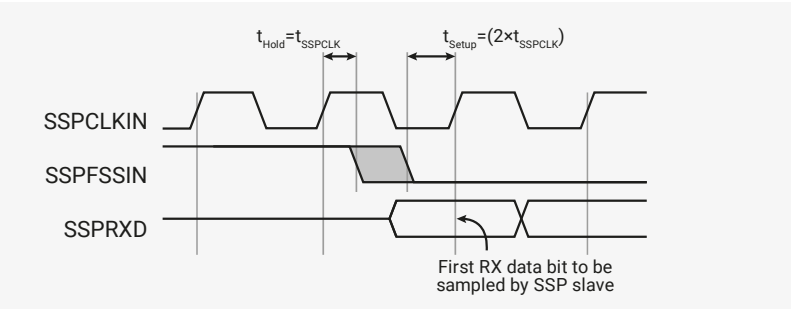


### 12.3.4.15. Examples of master and slave configurations

Figure 103, Figure 104, and Figure 105 shows how you can connect the PrimeCell SSP (PL022) peripheral to other synchronous serial peripherals, when it is configured as a master or a slave.

**NOTE**

> The SSP (PL022) does not support dynamic switching between master and slave in a system. Each instance is configured and connected either as a master or slave.

Figure 103 shows the PrimeCell SSP (PL022) instanced twice, as a single master and one slave. The master can broadcast to the slave through the master SSPTXD line. In response, the slave drives its nSSPOE signal HIGH, enabling its SSPTXD data onto the SSPRXD line of the master.

*Figure 103. PrimeCell SSP master coupled to a PL022 slave*

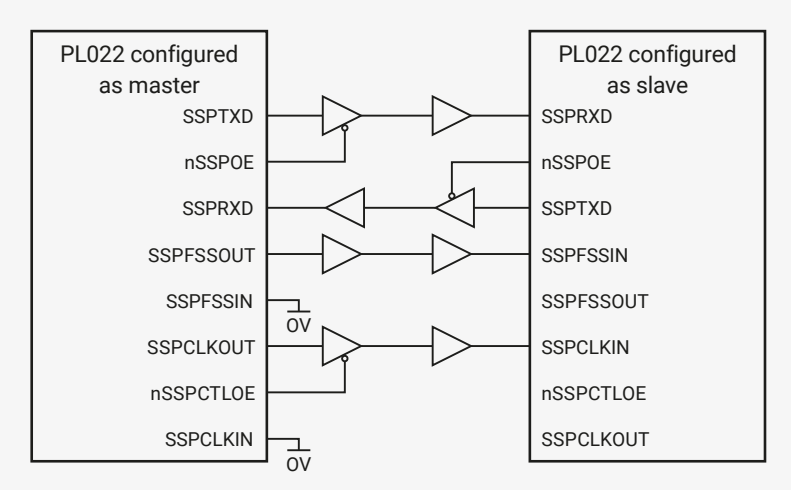


Figure 104 shows how an PrimeCell SSP (PL022), configured as master, interfaces to a Motorola SPI slave. The SPI Slave Select (SS) signal is permanently tied LOW and configures it as a slave. Similar to the above operation, the master can broadcast to the slave through the master PrimeCell SSP SSPTXD line. In response, the slave drives its SPI MISO port onto the SSPRXD line of the master.

Figure 104. PrimeCell SSP master coupled to an SPI slave

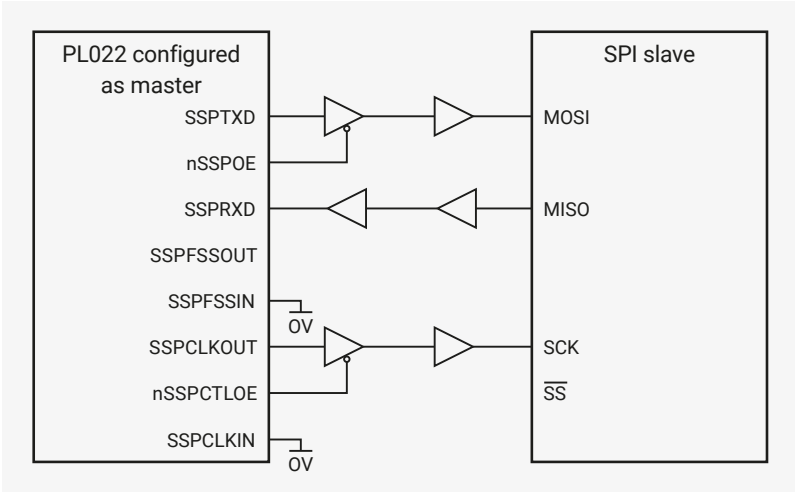


Figure 105 shows a Motorola SPI configured as a master and interfaced to an instance of a PrimeCell SSP (`PL022`) configured as a slave. In this case, the slave Select Signal (`SS`) is permanently tied HIGH to configure it as a master. The master can broadcast to the slave through the master SPI `MOSI` line and in response, the slave drives its nSSPOE signal LOW. This enables its `SSPTXD` data onto the `MISO` line of the master.

Figure 105. SPI master coupled to a PrimeCell SSP slave

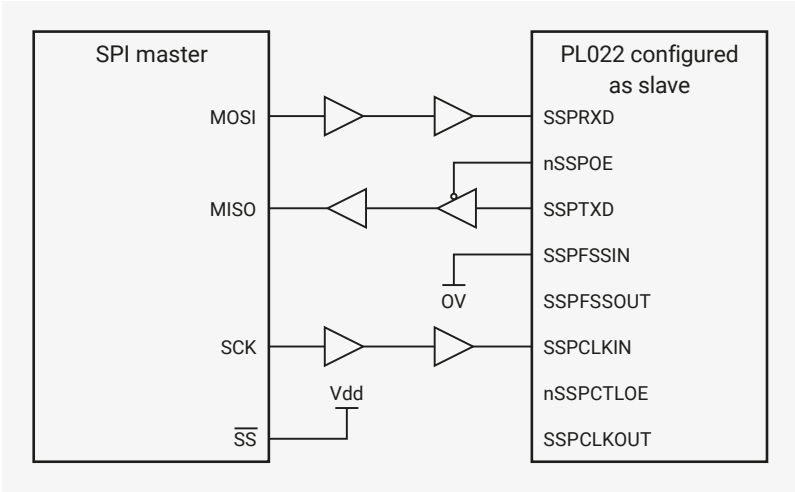


### 12.3.4.16. PrimeCell DMA interface

The PrimeCell SSP provides an interface to connect to the DMA controller. The PrimeCell SSP DMA control register, `SSPDMACR` controls the DMA operation of the PrimeCell SSP.

The DMA interface includes the following signals, for receive:

`SSPRXDMASREQ`

Single-character DMA transfer request, asserted by the SSP. This signal is asserted when the receive FIFO contains at least one character.

`SSPRXDMABREQ`

Burst DMA transfer request, asserted by the SSP. This signal is asserted when the receive FIFO contains four or more characters.

`SSPRXDMACLR`

DMA request clear, asserted by the DMA controller to clear the receive request signals. If DMA burst transfer is requested, the clear signal is asserted during the transfer of the last data in the burst.

The DMA interface includes the following signals, for transmit:

SSPTXDMASREQ

Single-character DMA transfer request, asserted by the SSP. This signal is asserted when there is at least one empty location in the transmit FIFO.

SSPTXDMABREQ

Burst DMA transfer request, asserted by the SSP. This signal is asserted when the transmit FIFO contains four characters or fewer.

SSPTXDMACLR

DMA request clear, asserted by the DMA controller, to clear the transmit request signals. If a DMA burst transfer is requested, the clear signal is asserted during the transfer of the last data in the burst.

The burst transfer and single transfer request signals are not mutually exclusive. They can both be asserted at the same time. For example, when there is more data than the watermark level of four in the receive FIFO, the burst transfer request, and the single transfer request, are asserted. When the amount of data left in the receive FIFO is less than the watermark level, the single request only is asserted. This is useful for situations where the number of characters left to be received in the stream is less than a burst.

For example, if 19 characters must be received, the DMA controller then transfers four bursts of four characters, and three single transfers to complete the stream.

**NOTE**

For the remaining three characters, the PrimeCell SSP does not assert the burst request.

Each request signal remains asserted until the relevant DMA clear signal is asserted. After the request clear signal is de-asserted, a request signal can become active again, depending on the conditions that previous sections describe. All request signals are de-asserted if the PrimeCell SSP is disabled, or the DMA enable signal is cleared.

Table 1098 shows the trigger points for DMABREQ, for both the transmit and receive FIFOs.

*Table 1098. DMA trigger points for the transmit and receive FIFOs*

| Burst length | | |
|---|---|---|
| **Watermark level** | **Transmit, number of empty locations** | **Receive, number of filled locations** |
| 1/2 | 4 | 4 |

Figure 106 shows the timing diagram for both a single transfer request, and a burst transfer request, with the appropriate DMA clear signal. The signals are all synchronous to PCLK.

*Figure 106. DMA transfer waveforms*

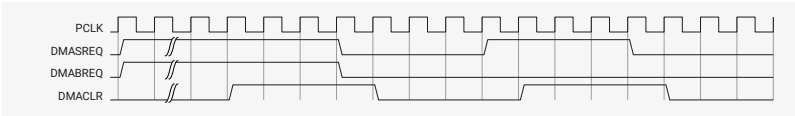


## 12.3.5. List of registers

The SPI0 and SPI1 registers start at base addresses of 0x40080000 and 0x40088000 respectively (defined as SPI0_BASE and SPI1_BASE in SDK).

*Table 1099. List of SPI registers*

| Offset | Name | Info |
|---|---|---|
| 0x000 | SSPCR0 | Control register 0, SSPCR0 on page 3-4 |
| 0x004 | SSPCR1 | Control register 1, SSPCR1 on page 3-5 |
| 0x008 | SSPDR | Data register, SSPDR on page 3-6 |
| 0x00c | SSPSR | Status register, SSPSR on page 3-7 |
| 0x010 | SSPCPSR | Clock prescale register, SSPCPSR on page 3-8 |

| Offset | Name | Info |
|---|---|---|
| 0x014 | SSPIMSC | Interrupt mask set or clear register, SSPIMSC on page 3-9 |
| 0x018 | SSPRIS | Raw interrupt status register, SSPRIS on page 3-10 |
| 0x01c | SSPMIS | Masked interrupt status register, SSPMIS on page 3-11 |
| 0x020 | SSPICR | Interrupt clear register, SSPICR on page 3-11 |
| 0x024 | SSPDMACR | DMA control register, SSPDMACR on page 3-12 |
| 0xfe0 | SSPPERIPHID0 | Peripheral identification registers, SSPPeriphID0-3 on page 3-13 |
| 0xfe4 | SSPPERIPHID1 | Peripheral identification registers, SSPPeriphID0-3 on page 3-13 |
| 0xfe8 | SSPPERIPHID2 | Peripheral identification registers, SSPPeriphID0-3 on page 3-13 |
| 0xfec | SSPPERIPHID3 | Peripheral identification registers, SSPPeriphID0-3 on page 3-13 |
| 0xff0 | SSPPCELLID0 | PrimeCell identification registers, SSPPCellID0-3 on page 3-16 |
| 0xff4 | SSPPCELLID1 | PrimeCell identification registers, SSPPCellID0-3 on page 3-16 |
| 0xff8 | SSPPCELLID2 | PrimeCell identification registers, SSPPCellID0-3 on page 3-16 |
| 0xffc | SSPPCELLID3 | PrimeCell identification registers, SSPPCellID0-3 on page 3-16 |

## SPI: SSPCR0 Register

**Offset**: 0x000

**Description**

Control register 0, SSPCR0 on page 3-4

*Table 1100. SSPCR0 Register*

| Bits | Description | Type | Reset |
|---|---|---|---|
| 31:16 | Reserved. | - | - |
| 15:8 | **SCR**: Serial clock rate. The value SCR is used to generate the transmit and receive bit rate of the PrimeCell SSP. The bit rate is: F SSPCLK CPSDVSR x (1+SCR) where CPSDVSR is an even value from 2-254, programmed through the SSPCPSR register and SCR is a value from 0-255. | RW | 0x00 |
| 7 | **SPH**: SSPCLKOUT phase, applicable to Motorola SPI frame format only. See Motorola SPI frame format on page 2-10. | RW | 0x0 |
| 6 | **SPO**: SSPCLKOUT polarity, applicable to Motorola SPI frame format only. See Motorola SPI frame format on page 2-10. | RW | 0x0 |
| 5:4 | **FRF**: Frame format: 00 Motorola SPI frame format. 01 TI synchronous serial frame format. 10 National Microwire frame format. 11 Reserved, undefined operation. | RW | 0x0 |
| 3:0 | **DSS**: Data Size Select: 0000 Reserved, undefined operation. 0001 Reserved, undefined operation. 0010 Reserved, undefined operation. 0011 4-bit data. 0100 5-bit data. 0101 6-bit data. 0110 7-bit data. 0111 8-bit data. 1000 9-bit data. 1001 10-bit data. 1010 11-bit data. 1011 12-bit data. 1100 13-bit data. 1101 14-bit data. 1110 15-bit data. 1111 16-bit data. | RW | 0x0 |

## SPI: SSPCR1 Register

**Offset**: 0x004

**Description**

Control register 1, SSPCR1 on page 3-5

*Table 1101. SSPCR1 Register*

| Bits | Description | Type | Reset |
|---|---|---|---|
| 31:4 | Reserved. | - | - |
| 3 | **SOD**: Slave-mode output disable. This bit is relevant only in the slave mode, MS=1. In multiple-slave systems, it is possible for an PrimeCell SSP master to broadcast a message to all slaves in the system while ensuring that only one slave drives data onto its serial output line. In such systems the RXD lines from multiple slaves could be tied together. To operate in such systems, the SOD bit can be set if the PrimeCell SSP slave is not supposed to drive the SSPTXD line: 0 SSP can drive the SSPTXD output in slave mode. 1 SSP must not drive the SSPTXD output in slave mode. | RW | 0x0 |
| 2 | **MS**: Master or slave mode select. This bit can be modified only when the PrimeCell SSP is disabled, SSE=0: 0 Device configured as master, default. 1 Device configured as slave. | RW | 0x0 |
| 1 | **SSE**: Synchronous serial port enable: 0 SSP operation disabled. 1 SSP operation enabled. | RW | 0x0 |
| 0 | **LBM**: Loop back mode: 0 Normal serial port operation enabled. 1 Output of transmit serial shifter is connected to input of receive serial shifter internally. | RW | 0x0 |

## SPI: SSPDR Register

**Offset**: 0x008

**Description**

Data register, SSPDR on page 3-6

*Table 1102. SSPDR Register*

| Bits | Description | Type | Reset |
|---|---|---|---|
| 31:16 | Reserved. | - | - |
| 15:0 | **DATA**: Transmit/Receive FIFO: Read Receive FIFO. Write Transmit FIFO. You must right-justify data when the PrimeCell SSP is programmed for a data size that is less than 16 bits. Unused bits at the top are ignored by transmit logic. The receive logic automatically right-justifies. | RWF | - |

## SPI: SSPSR Register

**Offset**: 0x00c

**Description**

Status register, SSPSR on page 3-7

*Table 1103. SSPSR Register*

| Bits | Description | Type | Reset |
|---|---|---|---|
| 31:5 | Reserved. | - | - |
| 4 | **BSY**: PrimeCell SSP busy flag, RO: 0 SSP is idle. 1 SSP is currently transmitting and/or receiving a frame or the transmit FIFO is not empty. | RO | 0x0 |
| 3 | **RFF**: Receive FIFO full, RO: 0 Receive FIFO is not full. 1 Receive FIFO is full. | RO | 0x0 |
| 2 | **RNE**: Receive FIFO not empty, RO: 0 Receive FIFO is empty. 1 Receive FIFO is not empty. | RO | 0x0 |
| 1 | **TNF**: Transmit FIFO not full, RO: 0 Transmit FIFO is full. 1 Transmit FIFO is not full. | RO | 0x1 |
| 0 | **TFE**: Transmit FIFO empty, RO: 0 Transmit FIFO is not empty. 1 Transmit FIFO is empty. | RO | 0x1 |

## SPI: SSPCPSR Register

**Offset**: 0x010

**Description**

Clock prescale register, SSPCPSR on page 3-8

*Table 1104. SSPCPSR Register*

| Bits | Description | Type | Reset |
|---|---|---|---|
| 31:8 | Reserved. | - | - |
| 7:0 | **CPSDVSR**: Clock prescale divisor. Must be an even number from 2-254, depending on the frequency of SSPCLK. The least significant bit always returns zero on reads. | RW | 0x00 |

## SPI: SSPIMSC Register

**Offset**: 0x014

**Description**

Interrupt mask set or clear register, SSPIMSC on page 3-9

*Table 1105. SSPIMSC Register*

| Bits | Description | Type | Reset |
|---|---|---|---|
| 31:4 | Reserved. | - | - |
| 3 | **TXIM**: Transmit FIFO interrupt mask: 0 Transmit FIFO half empty or less condition interrupt is masked. 1 Transmit FIFO half empty or less condition interrupt is not masked. | RW | 0x0 |
| 2 | **RXIM**: Receive FIFO interrupt mask: 0 Receive FIFO half full or less condition interrupt is masked. 1 Receive FIFO half full or less condition interrupt is not masked. | RW | 0x0 |
| 1 | **RTIM**: Receive timeout interrupt mask: 0 Receive FIFO not empty and no read prior to timeout period interrupt is masked. 1 Receive FIFO not empty and no read prior to timeout period interrupt is not masked. | RW | 0x0 |
| 0 | **RORIM**: Receive overrun interrupt mask: 0 Receive FIFO written to while full condition interrupt is masked. 1 Receive FIFO written to while full condition interrupt is not masked. | RW | 0x0 |

## SPI: SSPRIS Register

**Offset**: 0x018

**Description**

Raw interrupt status register, SSPRIS on page 3-10

*Table 1106. SSPRIS Register*

| Bits | Description | Type | Reset |
|---|---|---|---|
| 31:4 | Reserved. | - | - |
| 3 | **TXRIS**: Gives the raw interrupt state, prior to masking, of the SSPTXINTR interrupt | RO | 0x1 |
| 2 | **RXRIS**: Gives the raw interrupt state, prior to masking, of the SSPRXINTR interrupt | RO | 0x0 |
| 1 | **RTRIS**: Gives the raw interrupt state, prior to masking, of the SSPRTINTR interrupt | RO | 0x0 |

| Bits | Description | Type | Reset |
|---|---|---|---|
| 0 | **RORRIS**: Gives the raw interrupt state, prior to masking, of the SSPRORINTR interrupt | RO | 0x0 |

## SPI: SSPMIS Register

**Offset**: 0x01c

**Description**

Masked interrupt status register, SSPMIS on page 3-11

*Table 1107. SSPMIS Register*

| Bits | Description | Type | Reset |
|---|---|---|---|
| 31:4 | Reserved. | - | - |
| 3 | **TXMIS**: Gives the transmit FIFO masked interrupt state, after masking, of the SSPTXINTR interrupt | RO | 0x0 |
| 2 | **RXMIS**: Gives the receive FIFO masked interrupt state, after masking, of the SSPRXINTR interrupt | RO | 0x0 |
| 1 | **RTMIS**: Gives the receive timeout masked interrupt state, after masking, of the SSPRTINTR interrupt | RO | 0x0 |
| 0 | **RORMIS**: Gives the receive over run masked interrupt status, after masking, of the SSPRORINTR interrupt | RO | 0x0 |

## SPI: SSPICR Register

**Offset**: 0x020

**Description**

Interrupt clear register, SSPICR on page 3-11

*Table 1108. SSPICR Register*

| Bits | Description | Type | Reset |
|---|---|---|---|
| 31:2 | Reserved. | - | - |
| 1 | **RTIC**: Clears the SSPRTINTR interrupt | WC | 0x0 |
| 0 | **RORIC**: Clears the SSPRORINTR interrupt | WC | 0x0 |

## SPI: SSPDMACR Register

**Offset**: 0x024

**Description**

DMA control register, SSPDMACR on page 3-12

*Table 1109. SSPDMACR Register*

| Bits | Description | Type | Reset |
|---|---|---|---|
| 31:2 | Reserved. | - | - |
| 1 | **TXDMAE**: Transmit DMA Enable. If this bit is set to 1, DMA for the transmit FIFO is enabled. | RW | 0x0 |
| 0 | **RXDMAE**: Receive DMA Enable. If this bit is set to 1, DMA for the receive FIFO is enabled. | RW | 0x0 |

## SPI: SSPPERIPHID0 Register

**Offset**: 0xfe0

**Description**

Peripheral identification registers, SSPPeriphID0-3 on page 3-13

*Table 1110. SSPPERIPHID0 Register*

| Bits | Description | Type | Reset |
|---|---|---|---|
| 31:8 | Reserved. | - | - |
| 7:0 | **PARTNUMBER0**: These bits read back as 0x22 | RO | 0x22 |

## SPI: SSPPERIPHID1 Register

**Offset**: 0xfe4

**Description**

Peripheral identification registers, SSPPeriphID0-3 on page 3-13

*Table 1111. SSPPERIPHID1 Register*

| Bits | Description | Type | Reset |
|---|---|---|---|
| 31:8 | Reserved. | - | - |
| 7:4 | **DESIGNER0**: These bits read back as 0x1 | RO | 0x1 |
| 3:0 | **PARTNUMBER1**: These bits read back as 0x0 | RO | 0x0 |

## SPI: SSPPERIPHID2 Register

**Offset**: 0xfe8

**Description**

Peripheral identification registers, SSPPeriphID0-3 on page 3-13

*Table 1112. SSPPERIPHID2 Register*

| Bits | Description | Type | Reset |
|---|---|---|---|
| 31:8 | Reserved. | - | - |
| 7:4 | **REVISION**: These bits return the peripheral revision | RO | 0x3 |
| 3:0 | **DESIGNER1**: These bits read back as 0x4 | RO | 0x4 |

## SPI: SSPPERIPHID3 Register

**Offset**: 0xfec

**Description**

Peripheral identification registers, SSPPeriphID0-3 on page 3-13

*Table 1113. SSPPERIPHID3 Register*

| Bits | Description | Type | Reset |
|---|---|---|---|
| 31:8 | Reserved. | - | - |
| 7:0 | **CONFIGURATION**: These bits read back as 0x00 | RO | 0x00 |

## SPI: SSPPCELLID0 Register

**Offset**: 0xff0

**Description**

PrimeCell identification registers, SSPPCellID0-3 on page 3-16