1 DC MOTOR CONTROL WITH DIGITAL OUTPUTS

1.1 Task:

1. Connect the DC motor to Digital Output D7 and D6.
2. Write the program and check all the combinations of digital outputs; 00, 01, 10 and 11.
3. For each combination of digital outputs mark the state of the motor (fulfill the tbl. 1).R

Table 1: All combinations of the states of motor's connectors.

D7	D6	Motor rotation
0	0	
0	1	
1	0	
1	1	

1.2 Questions:

2. Try to stop the shaft of the DC motor for a short time and try to remember how difficult it is?
3. Why does motors' shaft not spinning if the digital output state are `1` and `1`.

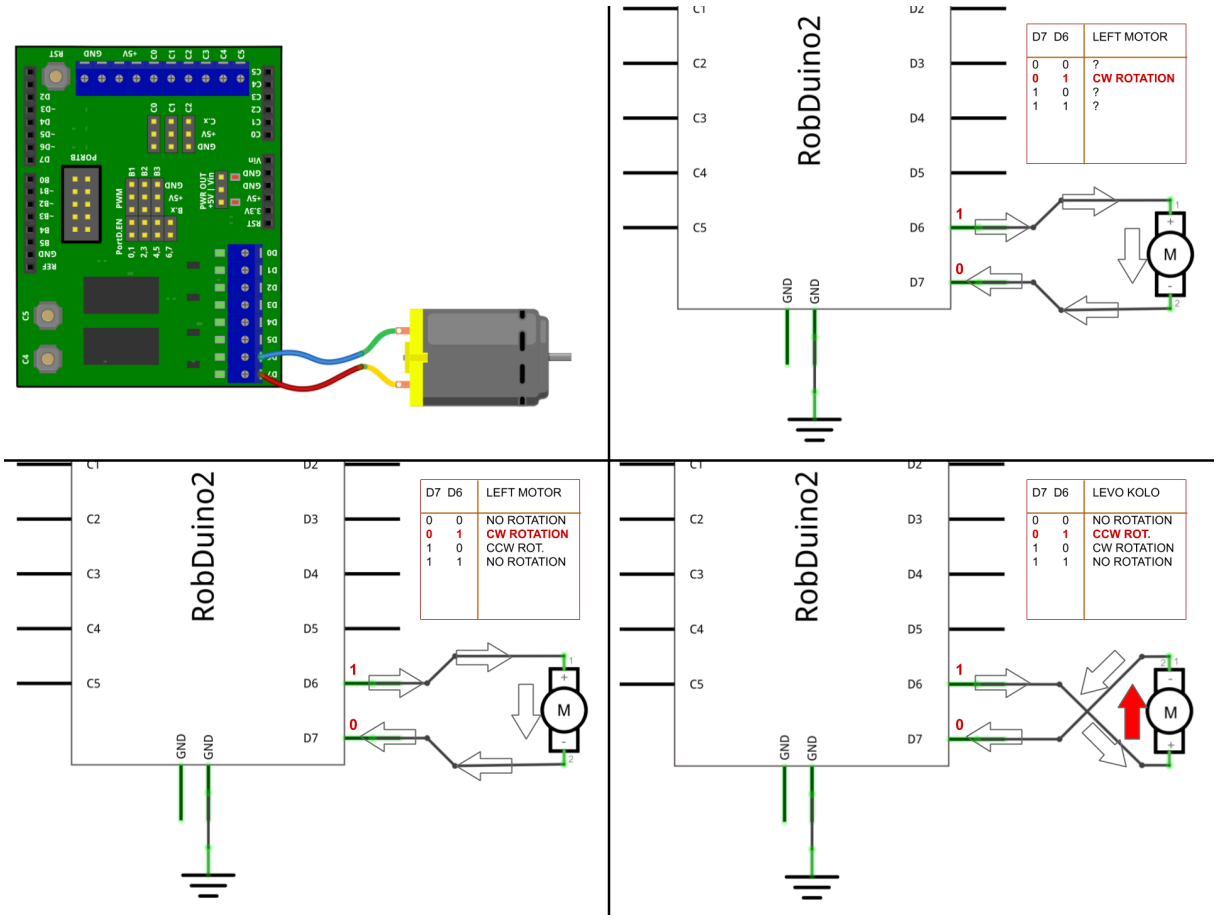

Figure 1: Wireing the DC motor to controller.

1.3 Summary

The motor's shaft is spinning according to the direction of the electric current trough the motor. The torque is weak.

1.4 Issues