1 DC MOTOR CONTROL WITH DIGITAL OUTPUTS

1.1 Task:

1. Connect the DC motor to Digital Output D7 and D6.
2. Write the program and check all the combinations of digital outputs; 00, 01, 10 and 11. First combination is shown in prog. 1

Program 1: DC Motor Control with Digital Outputs.

```
void setup()
{
  pinMode(7, OUTPUT);
  pinMode(6, OUTPUT);
  // D7=0, D6=0
  digitalWrite(7, LOW);
  digitalWrite(0, LOW);
  delay(3000);
  // Write other combinations here...

}
void loop()
{

}
```

3. For each combination of digital outputs mark the state of the motor (fulfill the tbl. 1).

Table 1: All combinations of the states of motor's connectors.

D7	D6	Motor rotation
0	0	
0	1	
1	0	
1	1	

1.2 Questions:

2. Try to stop the shaft of the DC motor for a short time and try to remember how difficult it is?
3. Why does motors' shaft not spinning if the digital output state are 1 and 1.

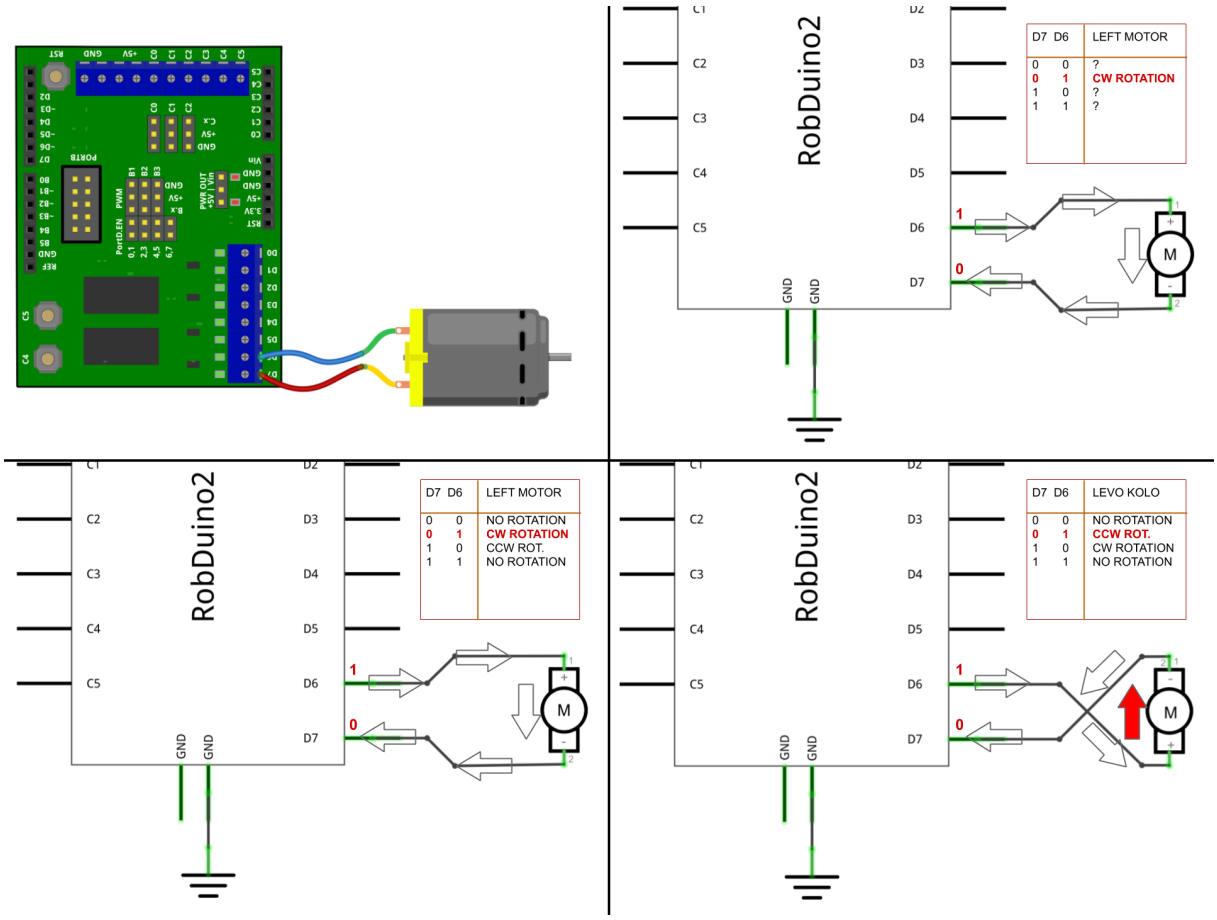

Figure 1: Wireing the DC motor to controller.

1.3 Summary

The motor's shaft is spinning according to the direction of the electric current trough the motor. The torque is weak.

1.4 Issues