1 BARRIER GATE CONSTRUCTION

1.1 Tasks:

1. Construct the barrier gate according to video instructions.

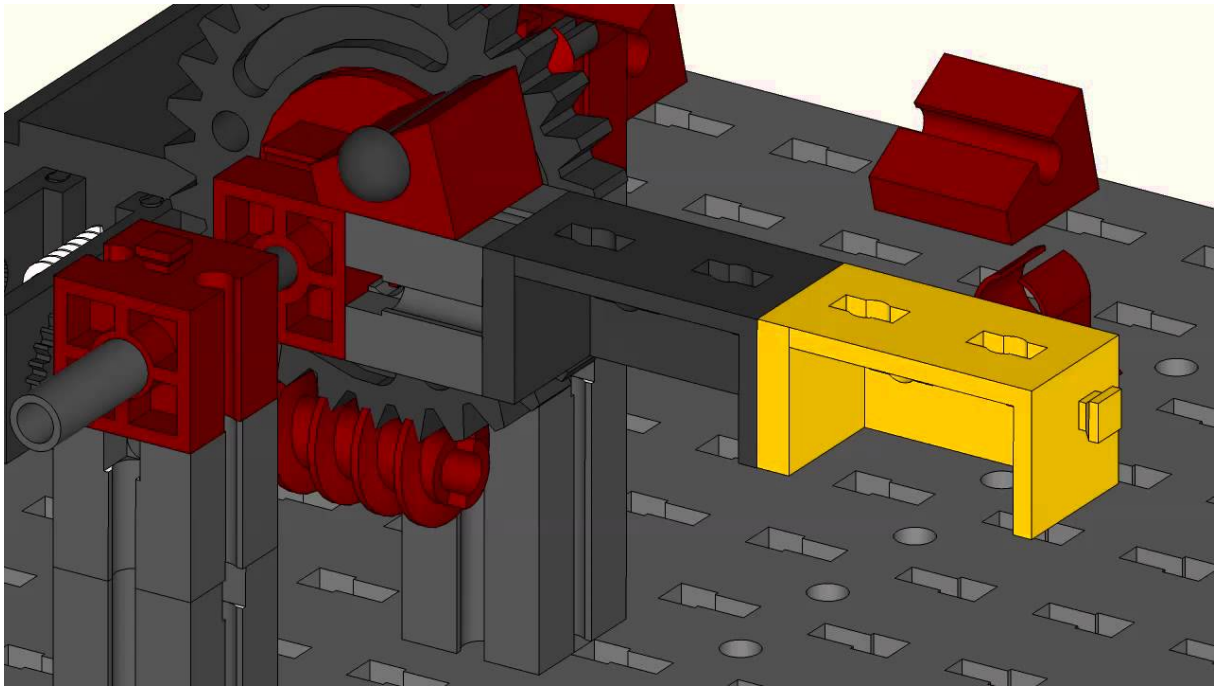

Figure 1: Constracting a barrier gate.

2. Connect the motor to digital outputs D7 and D6,
   - declare meaningful constants for output pins,
   - write a function `setIOpins()` for settig output pins and
   - include it in setup() function.
3. Write 3 time controlled functions for essential control of the barrier gate :
   - `moveGateUp();`
   - `moveGateDown();`
   - `stopTheGate();` and test this actions in setup() function.
4. Put this action of lifting and lowering the gate in For-loop and repeat it several times (e.g. 15 times).

Some sample code can be found in next example:

```
const int MOTOR_PIN_1 = 7;
const int MOTOR_PIN_2 = 6;

[-] void setup() {
        pinMode(MOTOR_PIN_1, OUTPUT); //declaration of I/O pins
        pinMode(MOTOR_PIN_2, OUTPUT);

        moveGateUp();                 // Lift the barrier.
        delay(3000);                  // Wait a bit...
        moveGateDown();               // Lower the barrier.
    }
[+] void loop() {
[+] void stopTheGate(){
[-] void moveGateUp() {
        digitalWrite(MOTOR_PIN_1, HIGH);
        digitalWrite(MOTOR_PIN_2, LOW);
        delay(1000);
        stopTheGate();
 }
[+] void moveGateDown() {
```

1.2 Questions:

1. What is the time for raising and lowering the barrier? Compare it to your colleague's value.
2. What is the disadvantage of time controlled loop?

1.3 Summary

1.3.1 <++>

<++>

1.4 Issues:

1.4.1 <++>

<++>