# 1 REFERENCE POINT

## 1.1 Tasks:

1. Add a switch to detect the reference point of the barrier gate. Let the reference point be the closed position of the barrier.

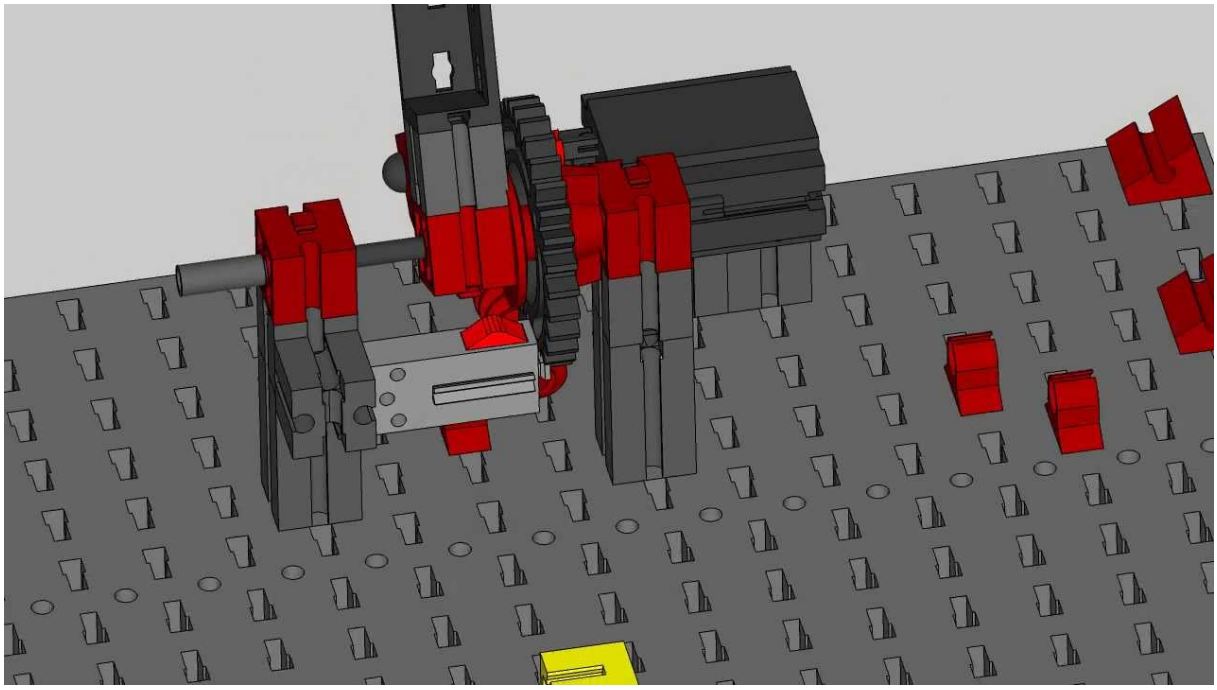

**Figure 1:** Adding the reference point key.

2. Connect the switch to the controller according to schematics.
3. Change the program to lower the barrier gate to reference switch position.

## 1.2 Questions:

1. Why is detection of reference point important?
2. <++>

## 1.3 Summary

### 1.3.1 <++>

<++>

## 1.4 Issues:

### 1.4.1 <++>

<++>