# 1 HOW THE DC MOTOR WORKS

## 1.1 Task:

1. Connect the DC motor to the battery and make it run.
2. You can try different combinations to connect the terminals of the motor like:
    - + and -
    - - and +
    - - and -
    - + and +.

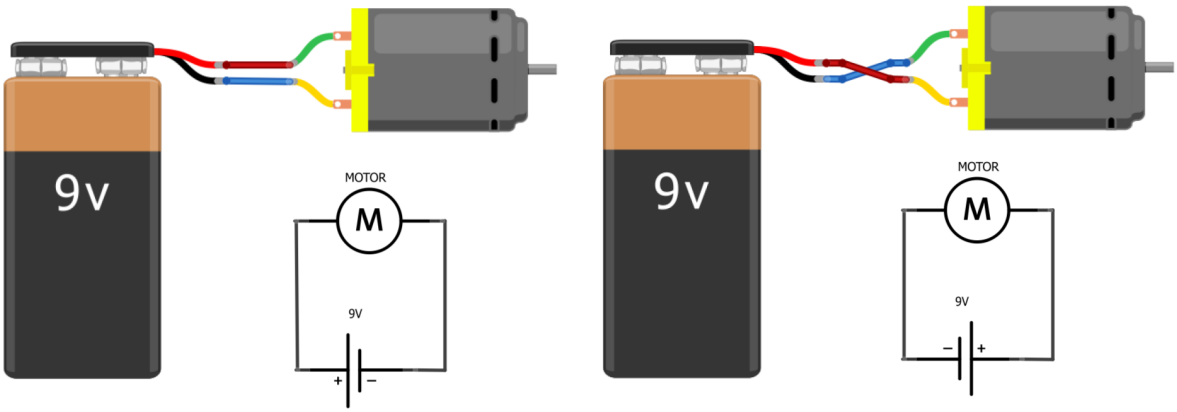


**Figure 1:** DC motor connection.

## 1.2 Questions:

1. In which direction the motor's shaft spins in different situations?
2. In which direction the electric current flow?
3. Why does motor is not spinning when both connectors are connected to + terminal of the battery?

### 1.3 Summary

The rotation of the DC motor depends on the direction of electric current.

### 1.4 Issues

#### 1.4.1 *When I connect the DC motor to + and - terminals of the battery the motor's shaft does not spin.*

Check the voltage of the battery… battery may be discharged.
Check the connectors of the motor… may be bad.

## 2 CONTROLLING THE DC MOTOR WITH DIGITAL OUTPUTS

### 2.1 Task:

1. Connect the DC motor to Digital Output D7 and D6.
2. Write the program and check all the combinations of digital outputs; 00, 01, 10 and 11.

**Table 1:** All combinations of the states of motor's connectors.

| D7 | D6 | Motor rotation |
|---|---|---|
| 0 | 0 | |
| 0 | 1 | |
| 1 | 0 | |
| 1 | 1 | |

### 2.2 Questions:

1. For each combination of digital outputs mark the state of the motor (fulfill the tbl. **??**).
2. Try to stop the shaft of the DC motor for a short time and try to remember how difficult it is?
3. Why does motors' shaft not spinning if the digital output state are `1` and `1`.

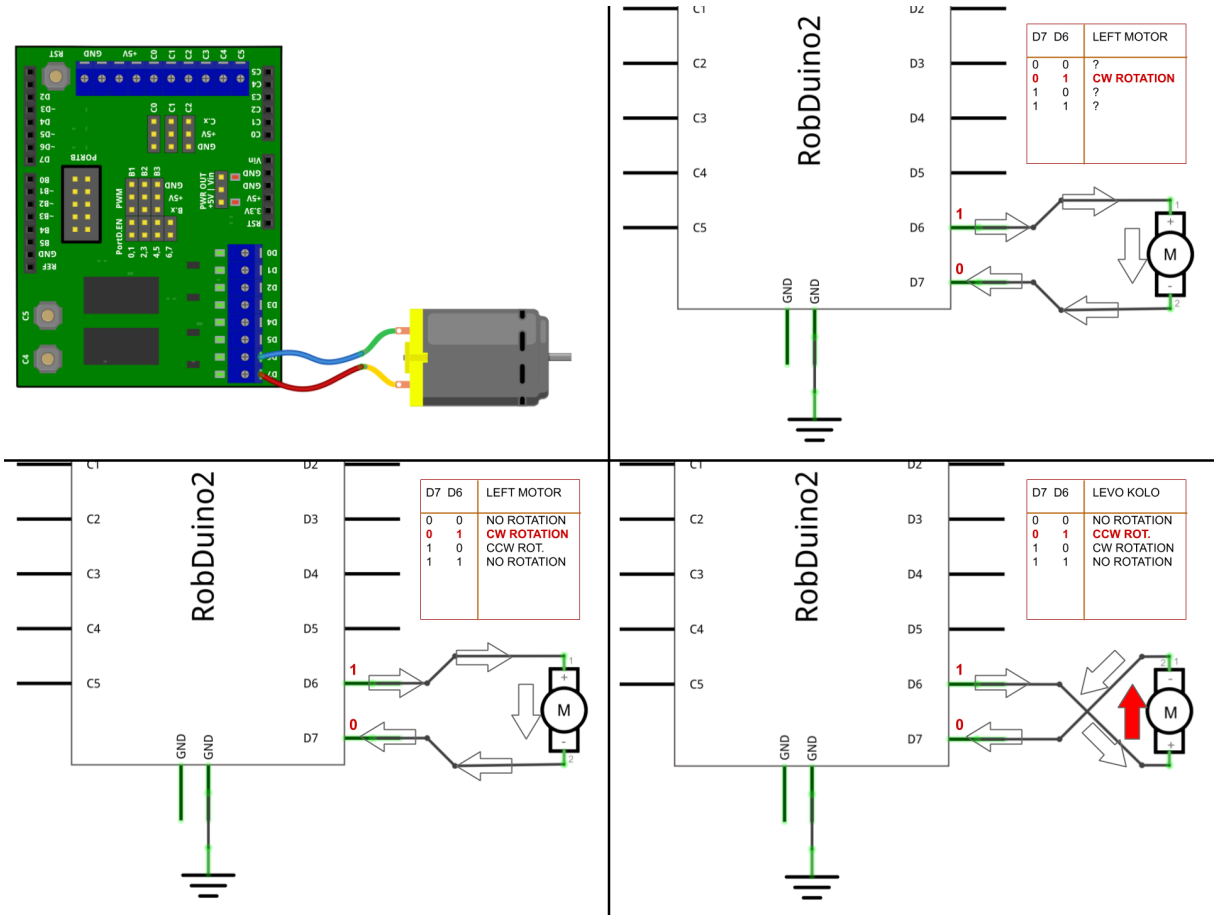


**Figure 2:** Wireing the DC motor to controller.

## 2.3 Summary

The motor's shaft is spinning according to the direction of the electric current trough the motor. The torque is weak.

## 2.4 Issues