VOLTAGE CONVERTER

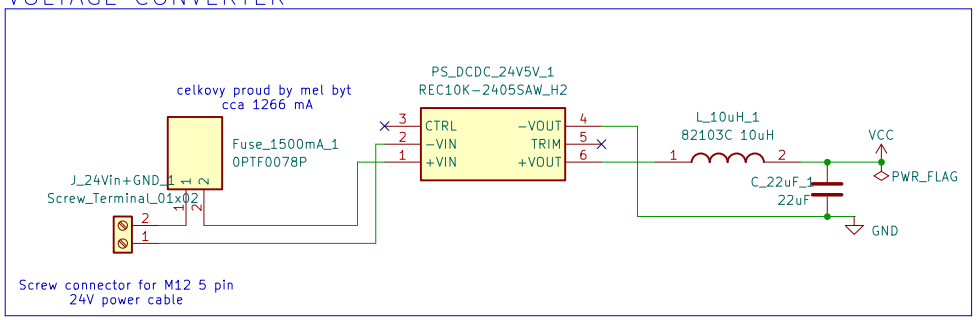

DEVELOPMENT BOARD

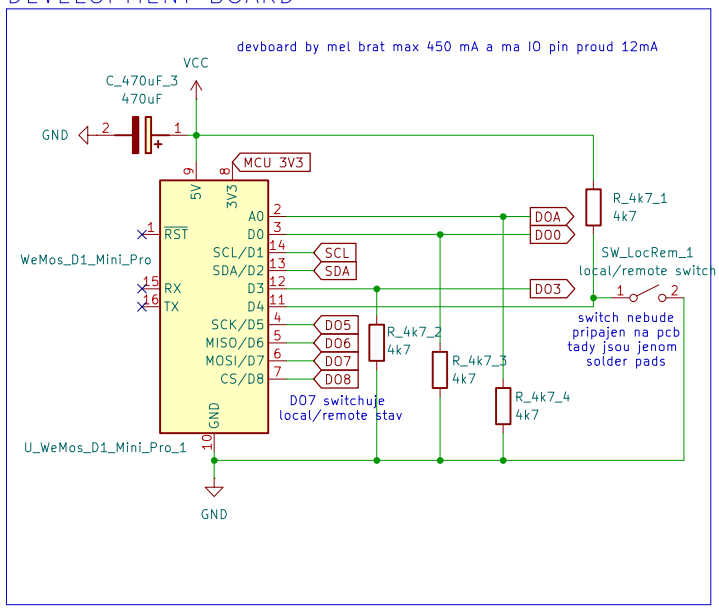

LOGIC CIRCUIT

ON/OFF

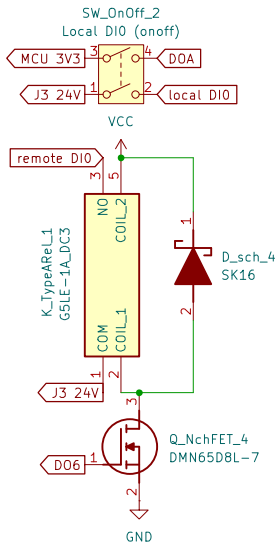

INC. SPEED

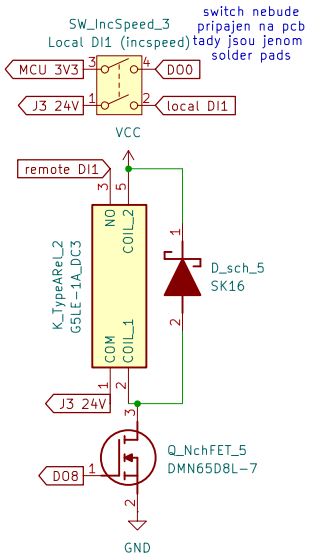

DEC. SPEED

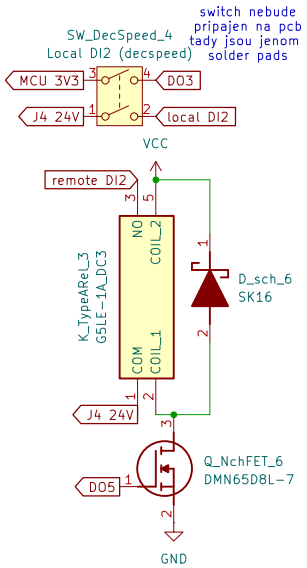

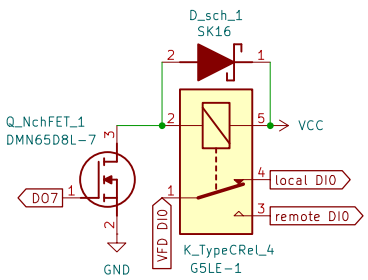

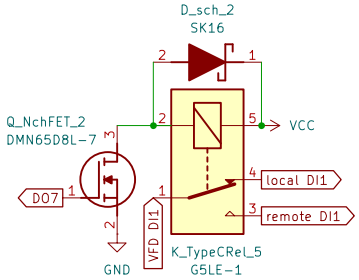

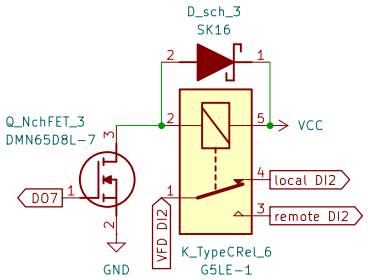

LCD CONNECTION

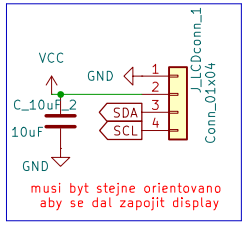

VFD DIGITAL INPUTS

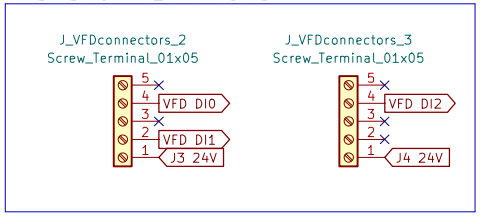
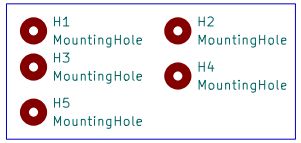
MOUNTING HOLES