Common Cathode

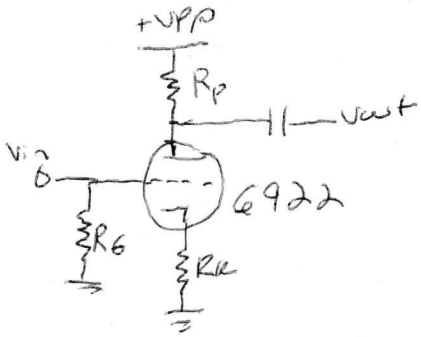

Thevenin Triode

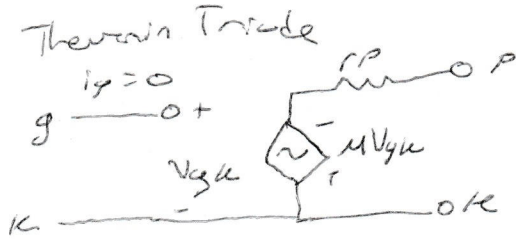

DC eq.

$V_{GK} = -I_p R_K$

$R_p = \dfrac{(V_{pp} - V_{pk} - I_p R_K)}{I_p}$

AC eq.

$Z_{in} = R_G$

$V_{gk} = -i_{out} R_K$

$V_{out} = i_{out}[r_p + (\mu+1) R_K]$

$Z_p = \dfrac{V_{out}}{i_{out}} = r_p + (\mu+1) R_K$

$Z_{out} = R_p \| Z_p = R_p \| [r_p + (\mu+1) R_K]$

$\dfrac{V_{pp} - 120}{9} = 12345.68$ 3

$I^2 R = W$

$\cos^2 \dfrac{R}{R} = \dfrac{1}{R}$

$\dfrac{1}{\cos^2} = R$

$R = 12345.68$

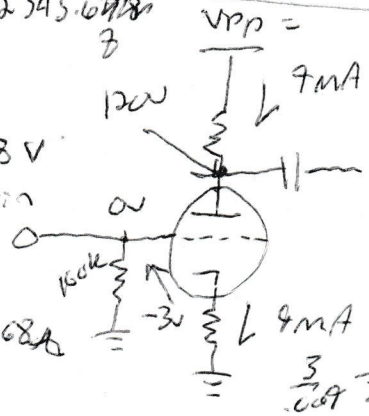

$\dfrac{3}{\cos} = 333.3352$

Plate current = 11.6 – 18.9 mA dc

15.2

Plate disp. max = 2W

x .7

~~1.4~~W

1 W

Line level: Consumer

±1.414

Pro = ±1.736

From ~~gm~~ gm Curve:

$V_p = 120V$

$V_g = -3V$

$I_p = 9mA$

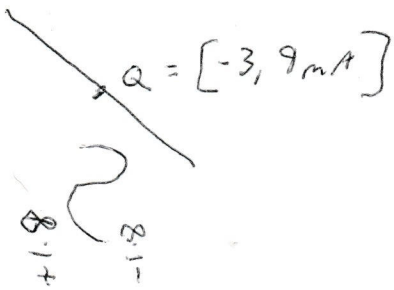

$\dfrac{V_{pp} - 120}{9\,mA} = \cancel{12345.679}$

120 100

2.2K

$\dfrac{20^2}{2.2k} = .18\,W$

$Z_{in} = 100k$

$Z_{out} =$

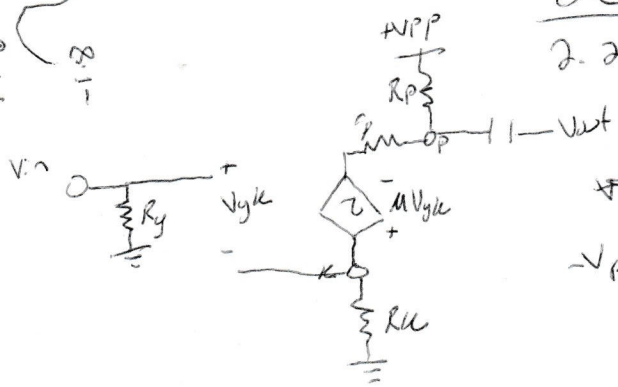

~~$V_{pp} - I_p R_p - I_p$~~

$-V_{pp} + I_p R_p + I_p r_p - \mu V_{gk}$

$+ I_p R_K =$

SRPP Analysis

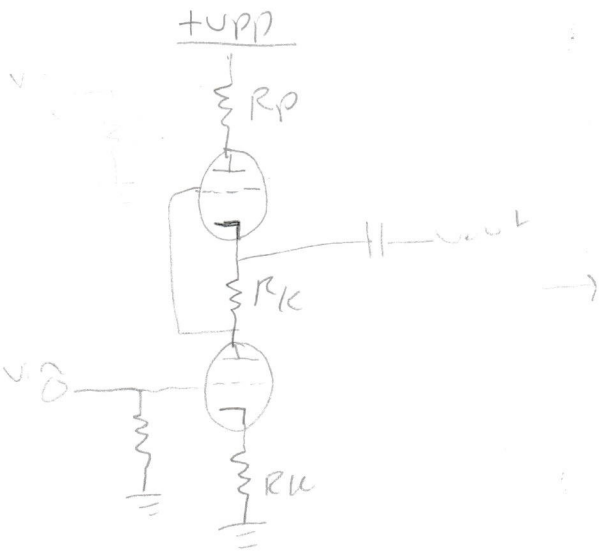

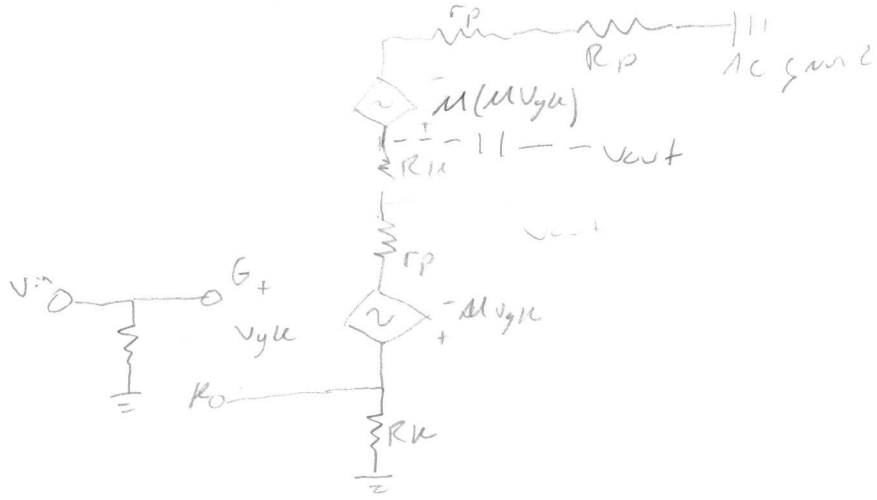

Vin = 0 for impedance

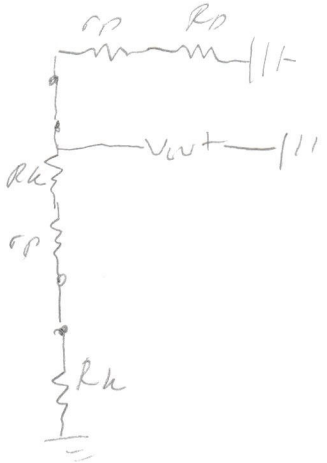

larger the cap, lower the cutoff

high pass circuit

$$Z_{out} = \frac{(r_p + 2R_k)\left[r_p + (\mu+2)R_k\right]}{2r_p + 2(\mu+2)R_k}$$

$$\frac{(2.6k + 2(330)\left[2.6k + \overset{33}{(\mu+2)}330\right]}{2(2.6k) + 2\overset{33}{(\mu+2)}330}$$

$$Z_{out} = \frac{3260 \cdot 13400}{5200 + 23100} = 156.66\,\Omega$$

$Z_{in} = R_G = 100k\Omega$

$R_k + r_{p1} + R_k \| r_{p2} + R_P$

$330 + 2.6k + 330 \| 2.6k + \cancel{2.2k}$

$3260 \| \cancel{4300}\ 2.6k$

$+ \cancel{941.433\Omega}$

$\| 446.416$

$$f = \frac{1}{2\pi RC} = \frac{1}{2\pi(1446.416)1\mu F}$$

$f_c = .0009\ Hz$

Cascading SRPP

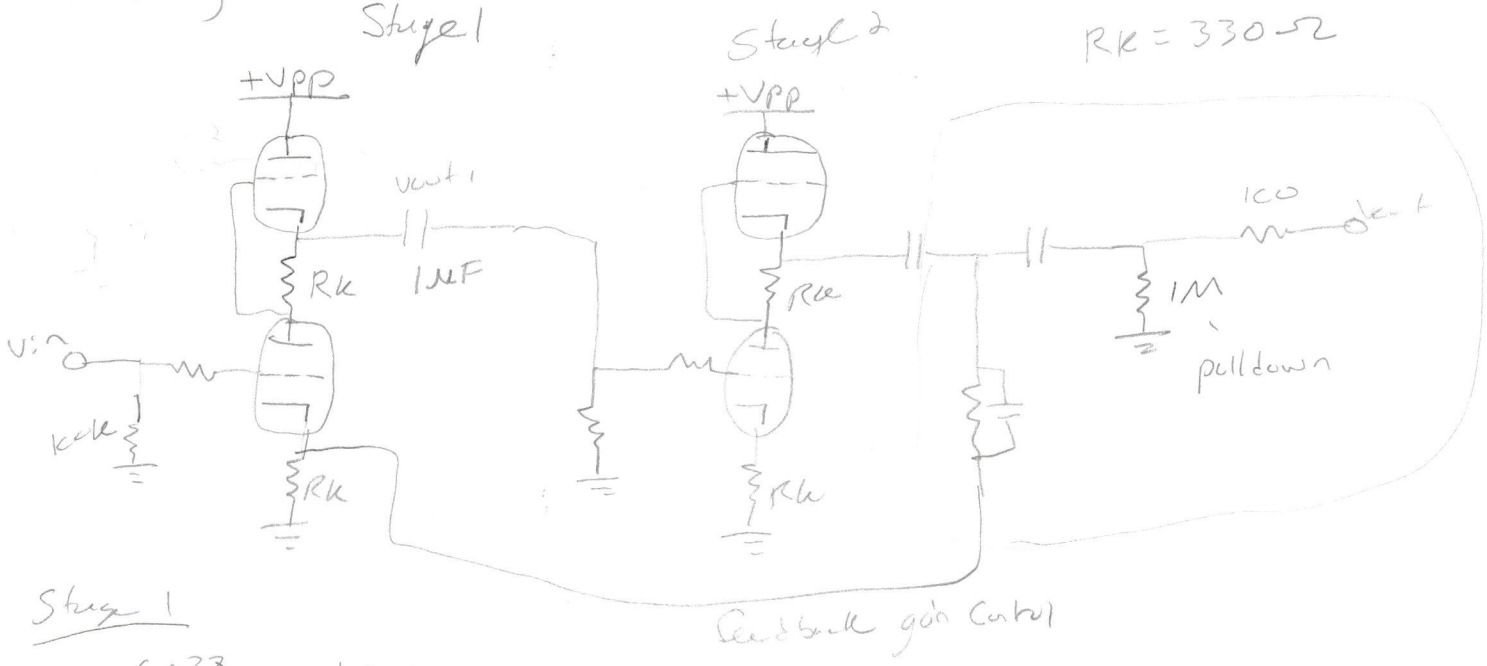

Stage 1

$A_v = \frac{26{,}038}{1.8} = 14.47$

$Z_{out} = 156.66\,\Omega$

$Z_{in} = 100k$

Stage 2

$A_v := 14.47$

$Z_{out} := 156.66\,\Omega$

$Z_{in} := 560k$

Calc f_{CH}

Vol Control

bass Control

treble Control

$A_{v(bypass)} =$

$$A_v = \frac{-\mu(r_p + \mu R_k)}{2r_p + 2R_k(\mu+1)} = \frac{-33(2.6k + 33(330))}{2(2.6k) + 2(330)(33+1)} = \frac{-445170}{27640} = -16.1$$

6922

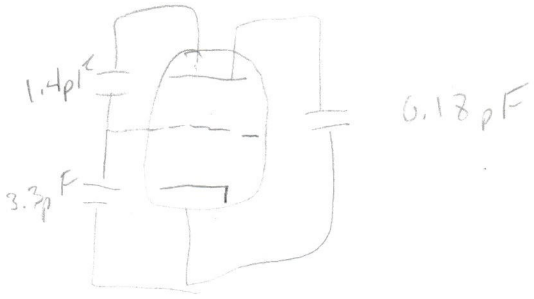

$C_{in_1} = C_{gk} + C_{gp} \cdot (A_v + 1)$

$3.3pF + 1.4pF \cdot (14.47 + 1)$

$C_{in_1} = 24.958\,pF$

$f_{CH} = \frac{1}{2\pi \cdot 100k \cdot 24.958} = 63769.169\,Hz$

$C_{in_2} = 5.3$

Overall $A_v = 12$

$A_v\,dB = 20\log(12) = 21.6\,dB$

AC Analysis

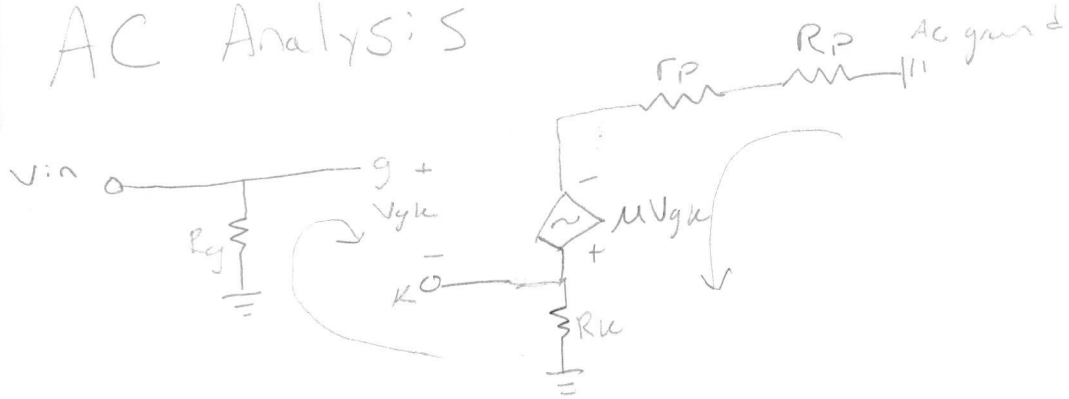

$$i_p R_p + i_p r_p - \mu V_{gk} + i_p R_k = 0$$

$$V_{in} = V_{gk} + i_p R_k$$

$$V_{gk} = V_{in} - i_p R_k$$

$$i_p (R_p + r_p + R_k) = \mu V_{gk}$$

$$i_p (R_p + r_p + R_k) = \mu (V_{in} - i_p R_k)$$

$$\mu V_{in} - \mu i_p R_k$$

output cap

$$C = \frac{1}{2\pi f R}$$

$$\frac{1}{2\pi R C} = f$$

$$i_p = \frac{\mu V_{in} - \mu i_p R_k}{(R_p + r_p + R_k)}$$

$$V_{out} = -i_p R_p = \frac{-\mu (V_{in} - i_p R_k) R_p}{(R_p + r_p + R_k)}$$

$$= \frac{-33(\pm 1.8 - .004(330))2.2k}{(2.2k + 2.6k + 330)} = -0.501$$

$$\frac{i_p (R_p + r_p + R_k)}{R_p + r_p + R_k} = \frac{\mu (V_{in} - i_p R_k)}{(R_p + r_p + R_k)}$$

$$\frac{1}{V_{in}} \left(i_p = \frac{\mu (V_{in} - i_p R_k)}{(R_p + r_p + R_k)} \right)$$

$$\frac{i_p}{V_{in}} = \mu \frac{1 - i_p R_k}{(R_p + r_p + R_k) V_{in}}$$

$$i_p(R_p + r_p + R_k) = \mu V_{in} + \mu i_p R_k$$

$$i_p(R_p + r_p + R_k) + \mu i_p R_k = \mu V_{in}$$

$$i_p[R_p + r_p + R_k + \mu R_k]$$

$$i_p[R_p + r_p + R_k(1+\mu)] = \mu V_{in}$$

$$i_p = \frac{\mu}{R_p + r_p + R_k(1+\mu)} V_{in}$$

$$V_{out} = i_p R_p \rightarrow \underbrace{\frac{\mu R_p}{R_p + r_p + R_k(1+\mu)}}_{A_v} V_{in}$$

$$A_v = \frac{33(2.2k)}{2.2k + 2.6k + 330(1+33)} = 5.17$$