Common Cathod – Single Ended

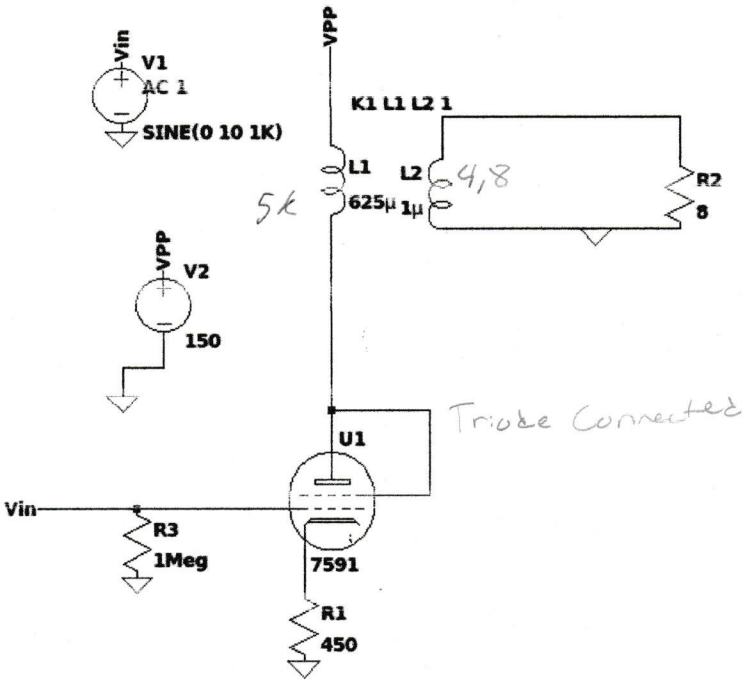

Heater

6.3 V @ 300 mA

$RP = 5k\Omega$

$R1 = \frac{4}{10mA} = 400 \approx 450\Omega$

From ym Curve:

$V_p = 100V$

$I_p = 10mA$

$V_g = -4V$

Power Consumption (DC)

$W = V_{pp} \cdot I_p^2 = 150 \cdot 10mA^2$

$= 0.015W$

$W(450\Omega) = 10mA^2 \cdot 450 = .045W$

SE output Stage

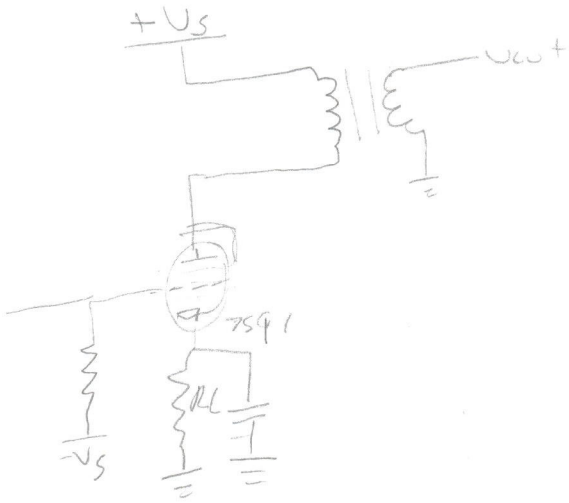

$V_{primary} = \sqrt{P \times R}$

$100V = \sqrt{2 \times 5k}$

$V_{T1} = 5k\Omega \cdot 0.0204 = 100$

$V_P = 120 - 100 = 20V$

$V_{gk} = -8V$

$RL = \frac{-8}{.020} = 450\Omega$

$\frac{Z_P}{Z_S} = \left(\frac{N_P}{N_S}\right)^2$

$N = \sqrt{\frac{5k}{4}} = 35.36$

$\frac{L_S}{L_P} = N^2 = \left(\frac{N_S}{N_P}\right)^2$

$\frac{1M}{L_P} = 35.36^2$

$1250\mu = L_P$

$\frac{L_P}{L_P} \cdot N^2 = \frac{L_S}{L_P} L_S$

$\frac{N^2}{L_S} = L_P$

$\frac{35.36^2}{1} =$