Cascading SRPP

Heater
6.3 v @ 300mA
x 2
6.3 v @ 600mA

SRPP-stage 1 SRPP-Stage 2

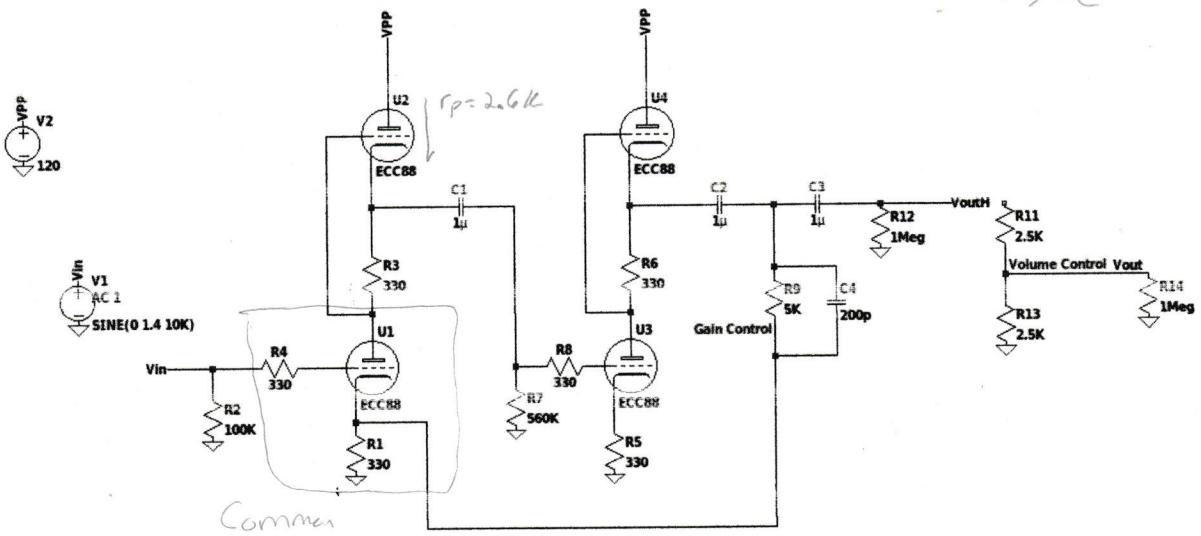

$R_p = r_{p_1} + R3 = 2.93k$

$\mu = 33$ for ECC88

From gm Curve:

$V_g \approx -1.3V$

$I_p = 4mA$

$V_p = 60V$

$R_k = R1 = R3 = \frac{-1.3V}{4mA} = 325\Omega \approx 330\Omega$

$Z_{in} = R2 = 100k$

$Z_{out} = \frac{(r_p + 2R_k)[r_p + (\mu+2)R_k]}{2r_p + 2(\mu+2)R_k} =$ of stage 2

3260 14150

$\frac{(2.6k + 2(330))(2.6k + (33+2)330)}{2(2.6k) + 2(33+2)330} = 1630\Omega$

5200 + 23100

Gain by 5k variable resistor

$A_{V(max)} = \frac{R4}{R1} = \frac{5k}{330} = 15.15$

$A_{V(min)} = \frac{1}{330} = 0.003$

Power Consumption (DC)

$I_p = 4mA$ per stage

$I_{(stage1 + stage2)} = 8mA$

$W = V_{pp} \cdot I = 0.96W$

$W_{through\ 330\Omega R} = I^2 R = .004^2 \cdot 330 = .005W$

Allow room for AC swing

Critical frequency

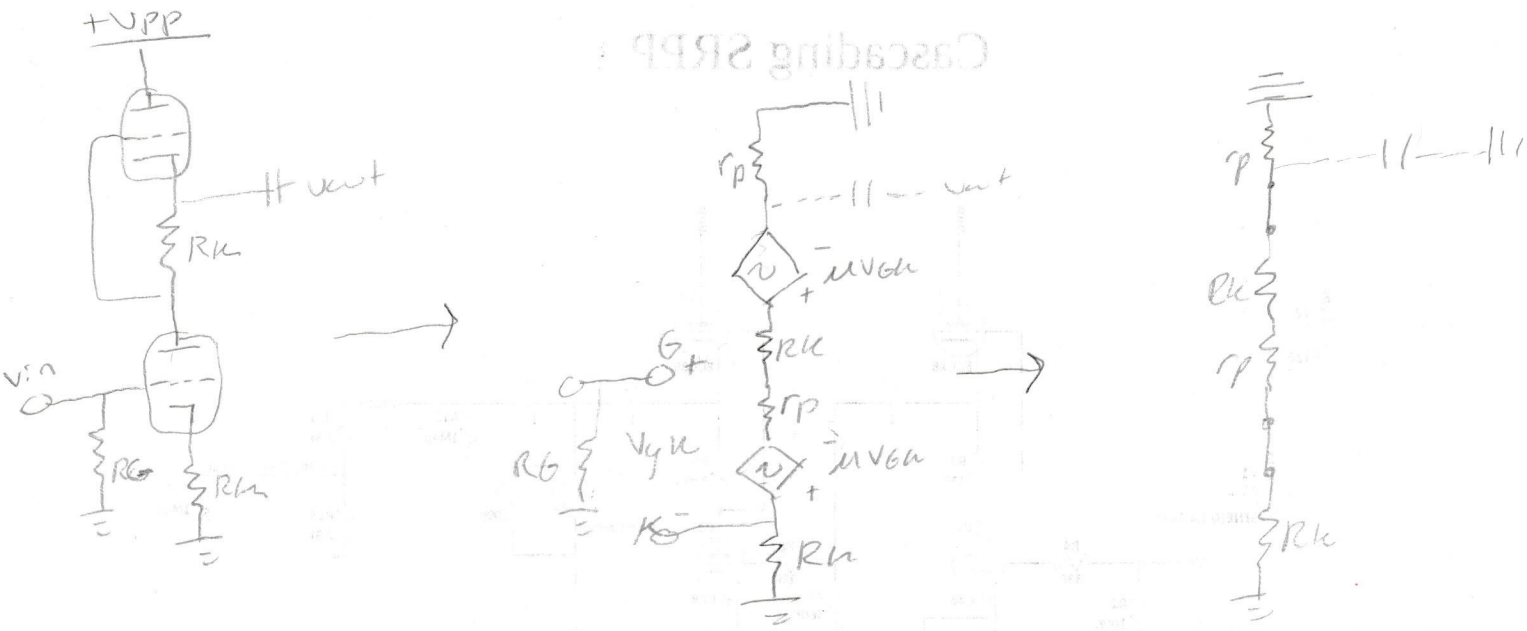

Vin = 0 for impedance

2 Stage

2660113260

$Z_{tot} = r_p \| R_K + r_p + R_K$

$= 1446.416\,\Omega$

$f_c = \frac{1}{2\pi RC} = \frac{1}{2\pi(1446.416)1M}$

$= 0.069\,Hz$