HAMMOND

Quality Products. Service Excellence.

Universal Push-Pull Tube Output *125A-125E Series*

Audio

Features

- Designed for general purpose or replacement use in push-pull tube output circuits.
- For single ended use, see our **125SE Series**.
- Frequency response: 150 Hz. - 15 Khz at full rated power (+/- 1db max. ref. 1 Khz)
- Open style with minimum 5" long primary leads.
- Secondary solder lugs for convenient secondary connections (except 125B - uses minimum 5" secondary leads).
- Primary impedances from 1,200 to 25,000 Ohms.
- Secondary impedances from 1.5 to 15 Ohms.
- For smaller sized units (but fewer impedance options) see our multiple impedance **125H Series**.

ASK ABOUT Custom Transformers & Chokes

Classic

RoHS

Gallery

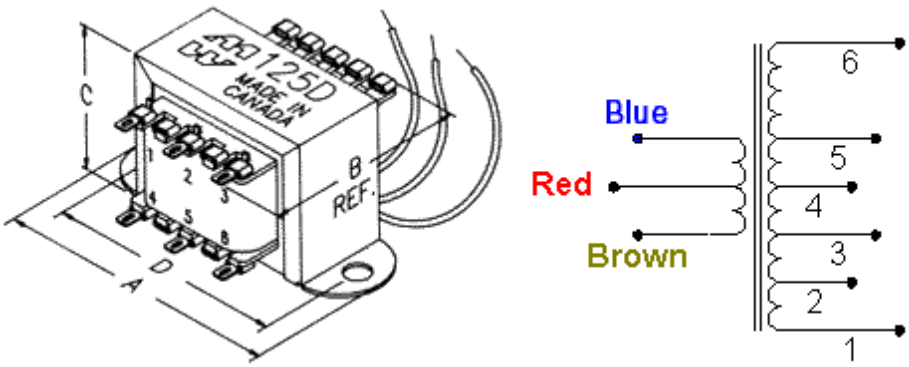

Part No.	Audio Watts	Max. D.C. Bias Per Side (ma)	Primary Inductance	Weight (lbs.)	Overall Dimensions A	B	C	D	Mounting Hole G
125A	3	20	14.94 H	0.19	2.06	1.25	1.19	1.75	0.19
125B	5	35	8.97 H	0.3	2.38	1.38	1.38	2.00	0.19
125C	8	45	5.60 H	0.5	2.81	1.50	1.69	2.38	0.19
125D	10	55	4.48 H	1	3.25	1.75	2.00	2.81	0.19
125E	15	60	2.99 H	1.5	3.69	2.00	2.31	3.13	0.19

Hook-Up Data

Connect Speaker To (Secondary Lugs)	Voice Coil Impedance (Ohms) 1.5	2	3.2	4	6	8	12	15
	Resulting Total Primary Impedance (Below), Blue Wire to Brown Wire							
1 & 2	27000	-	-	-	-	-	-	-
2 & 3	18000	24000	-	-	-	-	-	-
3 & 4	16500	22000	-	-	-	-	-	-
4 & 5	10000	13500	21600	27000	-	-	-	-
5 & 6	8500	11000	18000	22000	-	-	-	-
1 & 3	5400	7200	11500	15000	21600	-	-	-
2 & 4	4200	5600	9000	11200	16800	22500	-	-
3 & 5	3300	4400	7000	8800	13200	17600	26400	-
4 & 6	2400	3200	5100	6400	9600	12800	19200	24000
1 & 4	2150	2900	4600	5800	8700	11600	17400	21500
2 & 5	1550	2050	3300	4100	6150	8200	12300	15500
3 & 6	1300	1700	2700	3400	5100	6800	10200	12800
1 & 5	-	1400	2200	2800	4200	5600	8400	10200
2 & 6	-	-	1700	2100	3150	4200	6300	8000
1 & 6	-	-	1200	1500	2300	3000	4500	5600

Tags: **audio transformer**, **push-pull**, **output**, **phase inverter**, **tube output**

Data subject to change without notice

© 2025. Hammond Manufacturing Ltd. All rights reserved.