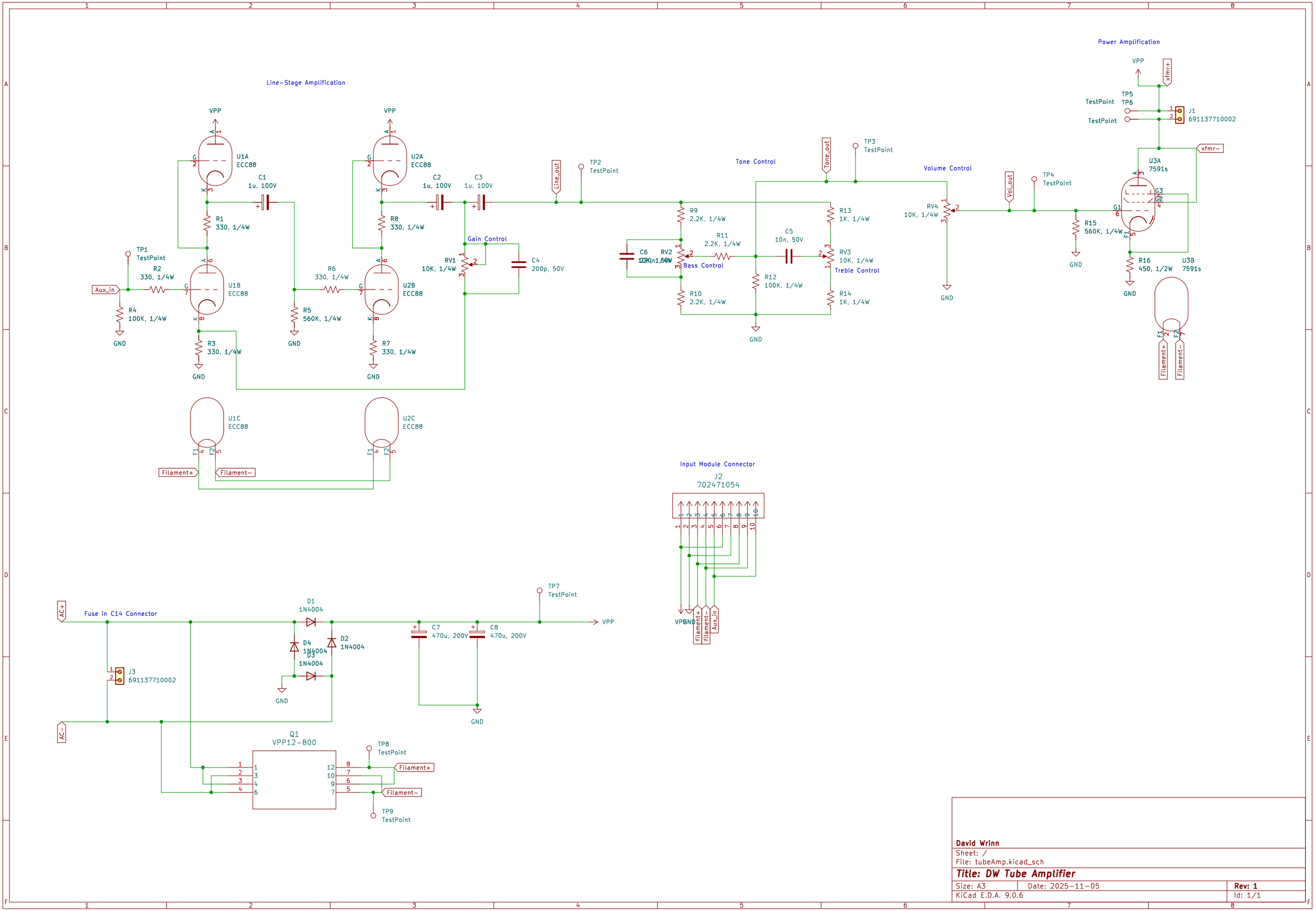

David Wrinn

Sheet: /

File: tubeAmp.kicad_sch

Title: DW Tube Amplifier

Size: A3	Date: 2025-11-05	**Rev: 1**
KiCad E.D.A. 9.0.6		Id: 1/1