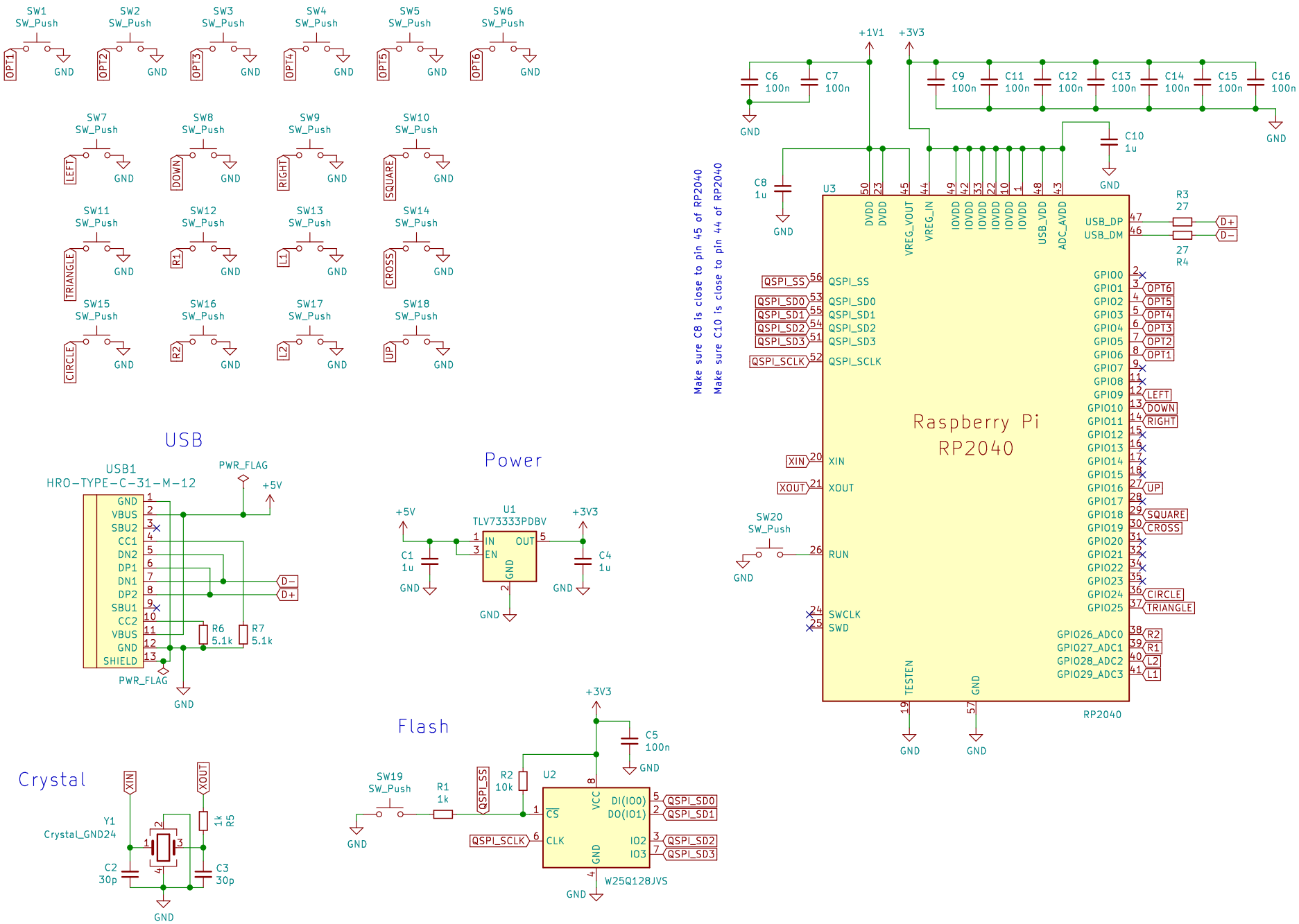
SW1 SW_Push OPT1 GND
SW2 SW_Push OPT2 GND
SW3 SW_Push OPT3 GND
SW4 SW_Push OPT4 GND
SW5 SW_Push OPT5 GND
SW6 SW_Push OPT6 GND
SW7 SW_Push LEFT GND
SW8 SW_Push DOWN GND
SW9 SW_Push RIGHT GND
SW10 SW_Push SQUARE GND
SW11 SW_Push TRIANGLE GND
SW12 SW_Push R1 GND
SW13 SW_Push L1 GND
SW14 SW_Push CROSS GND
SW15 SW_Push CIRCLE GND
SW16 SW_Push R2 GND
SW17 SW_Push L2 GND
SW18 SW_Push UP GND
USB
USB1
HRO-TYPE-C-31-M-12
PWR_FLAG
+5V
GND VBUS SBU2 CC1 DN2 DP1 DN1 DP2 SBU1 CC2 VBUS GND SHIELD
D-
D+
R6 5.1k
R7 5.1k
PWR_FLAG
GND
Power
+5V
U1
TLV73333PDBV
IN EN OUT GND
+3V3
C1 1u
C4 1u
GND
Crystal
XIN
XOUT
Y1
Crystal_GND24
1k R5
C2 30p
C3 30p
GND
Flash
+3V3
C5 100n
SW19 SW_Push
R1 1k
QSPI_SS
R2 10k
U2
CS VCC DI(IO0) DO(IO1) CLK IO2 IO3 GND
QSPI_SD0
QSPI_SD1
QSPI_SD2
QSPI_SD3
QSPI_SCLK
W25Q128JVS
GND
+1V1
+3V3
C6 100n
C7 100n
C9 100n
C11 100n
C12 100n
C13 100n
C14 100n
C15 100n
C16 100n
C10 1u
C8 1u
Make sure C8 is close to pin 45 of RP2040
Make sure C10 is close to pin 44 of RP2040
U3
DVDD DVDD VREG_VOUT VREG_IN IOVDD IOVDD IOVDD IOVDD IOVDD IOVDD USB_VDD ADC_AVDD
USB_DP USB_DM
R3 27
R4 27
D+
D-
QSPI_SS
QSPI_SD0
QSPI_SD1
QSPI_SD2
QSPI_SD3
QSPI_SCLK
XIN
XOUT
SW20 SW_Push
RUN
SWCLK
SWD
TESTEN
GND
Raspberry Pi
RP2040
GPIO0 GPIO1 GPIO2 GPIO3 GPIO4 GPIO5 GPIO6 GPIO7 GPIO8 GPIO9 GPIO10 GPIO11 GPIO12 GPIO13 GPIO14 GPIO15 GPIO16 GPIO17 GPIO18 GPIO19 GPIO20 GPIO21 GPIO22 GPIO23 GPIO24 GPIO25
OPT6 OPT5 OPT4 OPT3 OPT2 OPT1 LEFT DOWN RIGHT UP SQUARE CROSS CIRCLE TRIANGLE
GPIO26_ADC0 GPIO27_ADC1 GPIO28_ADC2 GPIO29_ADC3
R2 R1 L2 L1
RP2040