Professional Entry-Level 3D Printer

MIE 243 – Fall 2020

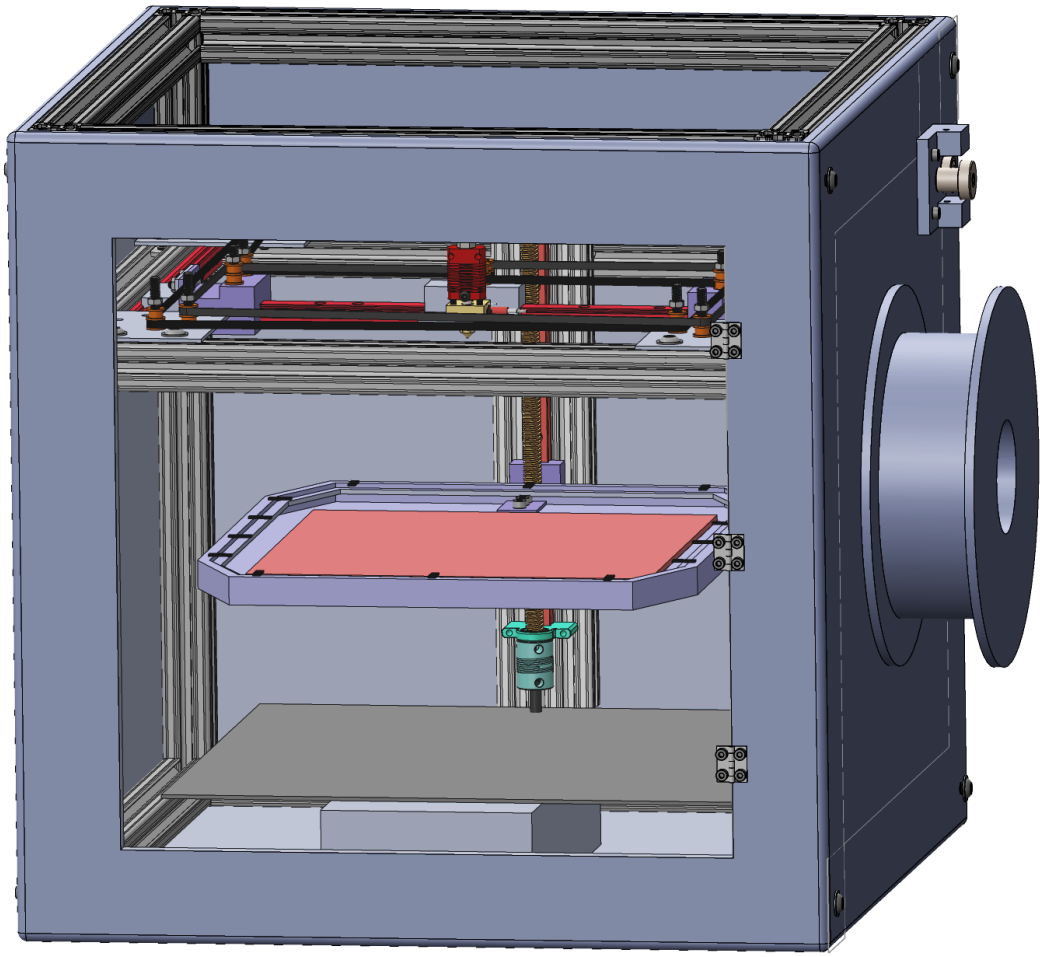

Zainab Ali (1005772745)

Samantha Butt (1006139581)

Emma Day (1005284639)

Sarah Khan (1005886365)

Tina Sokhanvar (1006303527)

Zeynep Tibik (1006228413)

1.0 Introduction

Technological advances have given way to the automation of many traditional machining systems to create faster and more efficient methods of generating components and rapid prototyping. These CNC machines are computer numerically controlled and are created using a combination of mechanical and electrical components, in addition to manipulating tools around several axes with high-precision [1]. 3D printers are a subsection of CNC machines that are capable of generating 3D models from 2D sketches using different material and extrusion techniques [1].

While 3D printers used to be reserved for the largest pockets within the biggest corporations, they are now widely accessible to the general public for recreational use. As such, it is more important than ever before to differentiate professional-grade 3D printers from the commercial varieties available to the mass public. The 3D printer designs to follow are a class above the hobbyist-level printers in a few key ways: precision, versatility, and volume. It is worth noting that these differentiators have a direct relationship with the increase in price of the machine. A larger budget allows for the improvements and use of higher-quality materials between the following professional-grade printers when compared to hobby-level ones.

Increased precision in the final build product can be provided by the addition of a heated plate underneath the build platform, which maintains a uniform temperature across the build and ensures minimal warping in the end result. Furthermore, a multitude of materials will be compatible with the printer, allowing for freedom in rapid prototyping without strict material limitations, such as PLA plastic in alternative entry-level 3D printers. Lastly, an increase in allowable print volume provides more opportunities to experiment, for instance by producing larger prototypes or to scale-up existing ideas.

The key areas of improvement also contribute to highlighting some general goals with the proposed 3D printers. In short, the printer will be versatile, providing meaningful use in a variety of fields, such as the automotive and manufacturing sectors, while also remaining viable for entry-level professionals.

Lastly, the printer will be designed with a special focus on the biomedical engineering sector and its uses, out of interest of all members of the development team, as well as the heavy use of 3D printers in the biomedical field for prototyping and testing. With the sector in mind, an entry-level professional 3D printer can prove invaluable to small research labs working towards manufacturing medical devices.

1.1 Research

To design the best 3D printer to match the aforementioned criteria, we must start by looking at the different additive manufacturing techniques available and their corresponding capabilities. There is a large variety of 3D printers ranging from hobbyist to professional printers, varying in characteristics such as precision, the material used, and build mechanisms, with each printer holding respective strengths and weaknesses. Their 3D printing technology, specifically modelling techniques, can be categorized into several categories, from which vat polymerization, material extrusion, and powder bed fusion techniques are best suited for rapid prototyping with polymers and composites [2].

As shown in Figure 1, the SLS, SLA, and FDM are the most common types of printers for builds that use polymers or composites. Selective laser sintering (SLS) printers fall under the powder bed fusion category and have been a popular choice for engineers for decades [3]. The process uses a laser to heat powered thermoplastics material (below the point of liquefaction) into solid models [3]. Stereolithography (SLA) printers use the vat polymerization technique to cure photopolymer thermosets (usually liquid resin) through UV light [4]. Fused deposition modelling (FDM) printers generate 3D objects through layering strands of plastic material (common thermoplastics) that is fed through and melted by a hot extruder [4]. In an FDM, printer material is mechanically bonded as opposed to chemically bonded structures in SLA prints.

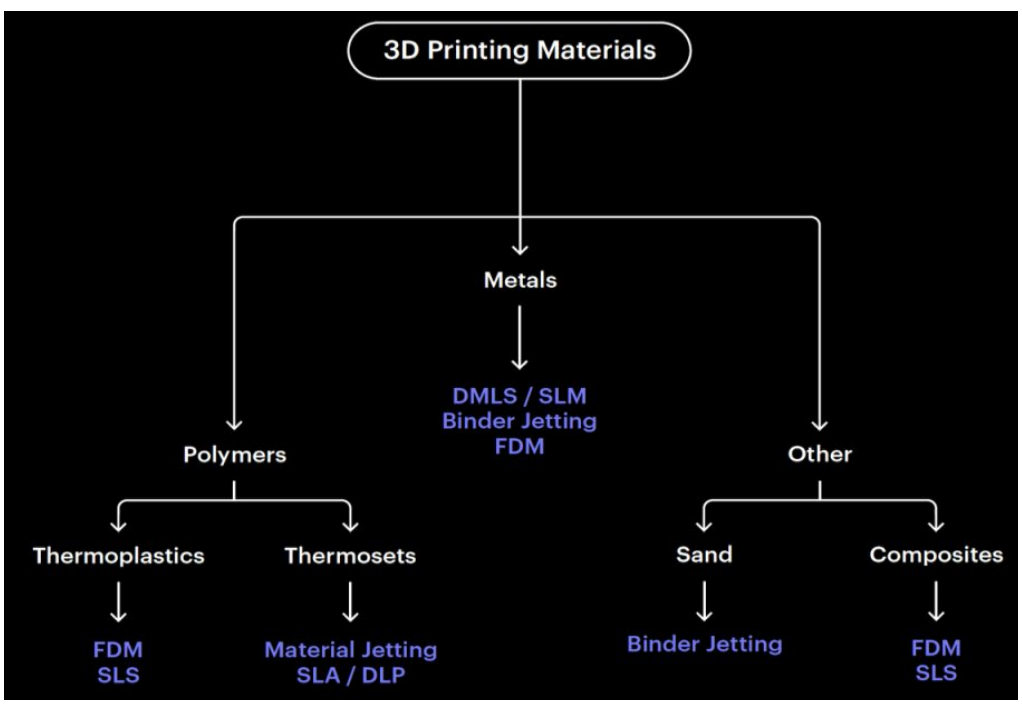

Figure 1. The flow chart shows the printers that are most commonly used for applications that use polymers or composites to generate 3D designs [2]

However, the SLS printer has several downfalls such as a higher cost than FDM and SLA printers, slower turnaround, and a grainy surface finish which would not be suitable for precision prints [2]. On the other hand, SLA printers can be quite brittle and require post-processing procedures to remove supports and ensure the resin is fully cured [5]. Parts must be rinsed in isopropyl alcohol (IPA), which is often done in an ultrasonic cleaner. After this, the supports are removed and the print is cured using UV light [6].

This significantly increases the time spent per build, which is a major downfall for situations that require rapid prototyping of many different components. Uncured resin also poses many safety concerns as designs might degrade with exposure to excessive sunlight or give off toxic fumes [7].

SLA and SLS printers also generate significant waste, since not all the resin/powder is used during each print [2]. Conversely, FDM prints require little post-processing and high standard polished parts can be created via optional post-processing methods, such as sanding, priming and painting, vapour smoothing, and epoxy coating [8].

FDM printers are faster than SLA printers, (especially regarding tall prints); this is because, in an SLA print, each cured layer has to be peeled off of the bottom which adds to the print time [9]. In an FDM printer, the user is also able to see the design as it progresses, which is not always possible with an SLA or SLS printer. This is because the model will be submerged in liquid resin or powder until the print is finished. However, FDM printers have limited dimensional accuracy. While the SLA printer can achieve a precision level of ±0.01mm FDM printers have a minimum tolerance of ±0.5mm [2]. However, this dimensional inaccuracy is not very significant, especially when building prototypes of larger objects, and it can be remedied through choices of mechanisms used for the z-axis motion (such as ball screws, bearings, couplers, linear rails etc.)

Another downfall of FDM printers is warping, which can result from different sections cooling at different rates, and nozzle and platform temperature differences [10]. This can cause variability in print dimensions and must be considered during the design process.

FDM printers are less expensive when printing rough prototypes in small numbers, but the difference between FDM and SLA prices becomes negligible if considering post-processing and larger production [10]. However, all things considered, FDM printers are very cost-effective and are flexible when it comes to material compatibility.

Given the focus on the biomedical engineering sector, the printer must have a high level of precision and allow for rapid prototyping in a cost-effective manner. Conventional manufacturing typically consists of moulds or machining techniques, which make it hard to get complex geometries and or intricate details that biomedical devices often need to work.

2.0 Engineering Specifications

The scope of this project is to develop a machine capable of producing a 3D physical model from a digital sketch (CAD software). This 3D printer will be designed for use by entry-level professional engineering firms with a small office setting, and a focus on biomedical engineering applications. Thus, the printer aims to create precise and detailed functional prototypes; a requirement of medical devices. This is in contrast to less specialized, often cheaper hobbyist 3D printers, which typically produce lower-resolution models.

Alongside its focus is on biomedical engineering uses, the design will ensure versatility and remain compatible with other engineering applications that would require rapid prototyping. Hobbyist printers are often limited in terms of the build volume and variety of filament. Moreover, the prints they create are also subject to warping. This is a consequence of the 3D printer's size and the manufacturer's desire to achieve a low price point for the end consumer. The following proposed design will allow for the utilization of multiple materials, and attempt to minimize warping. Finally, the health and safety of the user is of the utmost importance and will be factored into the design. The following table lists the engineering specifications for the conceptual design.

Table 1: Engineering Specifications

Specification	Description & Justification
Flexibility	-The design should be flexible in terms of build surfaces to allow the user to select a surface that will be the best compatible with the material of their choice. -The design will allow for the usage of at least three different materials.
Safety	The design should produce minimal odours and fumes to avoid potential harm to the user.
Operating Principle	The design will be a CNC Machine, taking digital sketches and creating physical models by depositing filament onto a removable build plate.
Quality of Print (Precision)	-The design should minimize the effect of warping because this significantly impacts the precision of the design [10]. -The design should allow for smaller layer heights (50- 200 microns) [10].
Overall Size	-Should not exceed a size of 450 x 450 x 450 mm for the overall dimensions in order to be utilized in an office setting. -Should have a build volume around 200 x 200 x 150 mm.
Estimated Cost	The target cost range for this design is $2000 - $5000, typical of higher quality desktop printers [11].

3.0 Candidate Designs

3.1 First Stage of Candidate Designs

FDM printers work by melting plastic filament and depositing it on a platform to build an object layer-by-layer [12]. This method allows for the use of a large variety of materials in printing, making the FDM printer highly versatile. Additionally, the FDM printer mechanisms can be used to build designs of a large range of volumes [10]. However, the method of layering melted plastic reduces the accuracy and strength of the final printed product, requiring attention and alterations in the orientation of the design while being printed.

FDM printers can be categorized into an assortment of designs, two of which are the cartesian and the delta [13]. Delta printers are designed for a larger range of motion in a short period of time and can achieve higher versatility because they minimize moving masses by having stationary motors [13]. On the other hand, cartesian printers are a more traditional type of FDM printer that have linear x-y-z motion.

The SLA 3D printer operates by curing resin according to the design that needs to be printed. This form of printing is highly accurate and allows for precise and high-strength prints. However, it is much more expensive to operate and takes longer to print [14].

3.1.1 FDM Core X-Y Printer (Rectilinear)

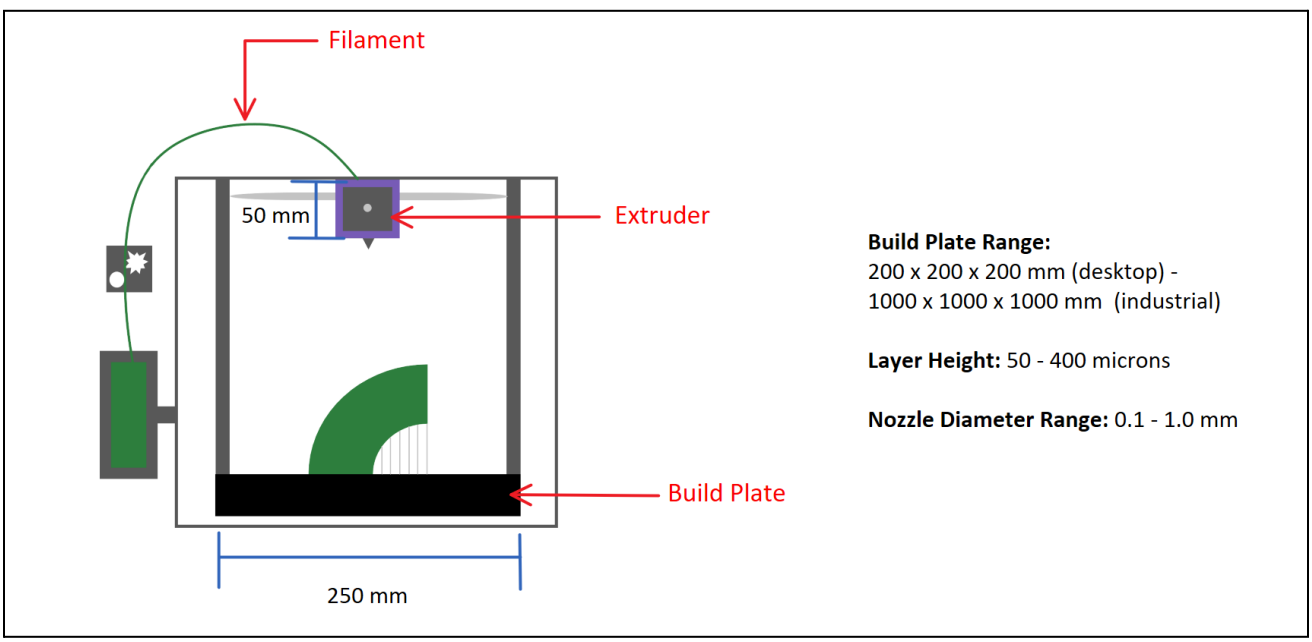

Figure 2. Sketch/diagram of CoreXY FDM printer candidate. [15]

In the FDM core X-Y printer, the filament extruder moves in both the X- and Y-direction via a belt system, while the build platform moves up and down in the Z-direction [13]. This printer utilizes an extruder, consisting of a cold and hot end, which melts and pushes the printing filament onto the build platform. The extruder can either be a Bowden or direct extruder, with each mechanism having its own strengths and weaknesses. The design of the printer also allows for a wide variety of volumes [10]. However, the precision and accuracy of the print depends on the nozzle sizes and can be affected by factors such as extruder design and belt tensioning.

3.1.2 FDM Delta Printer

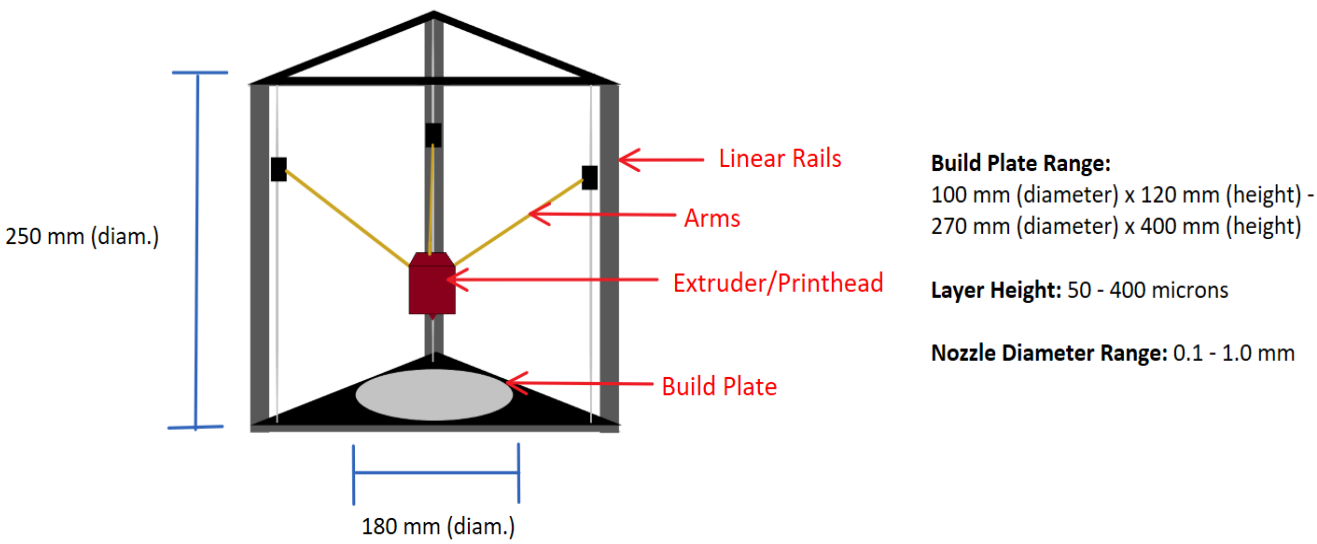

Figure 3. Sketch/diagram of Delta FDM printer candidate. [15]

The delta FDM printer also operates via Cartesian coordinates, similar to the core X-Y printer detailed in section 3.1.1. However, it is drastically different from the core X-Y printer in regards to its mechanisms and movement of the nozzle. In the delta printer, the printhead is attached to three or more arms, which are each attached to vertical rails. The linear vertical motion of the arms coordinate with each other to move the printhead in the X-,Y-, and Z-direction [13]. This design allows for highly precise and fast prints, and the delta printer can be designed to accommodate taller prints compared to the core X-Y printer [13] . However, the delta printer's focus on speed results in the degradation of the printer's precision when building; this means that prints made by the delta printer are often rougher and less detailed when compared to the same print from a core X-Y printer [16].

3.1.3 SLA Bottom-Up DLP Printer

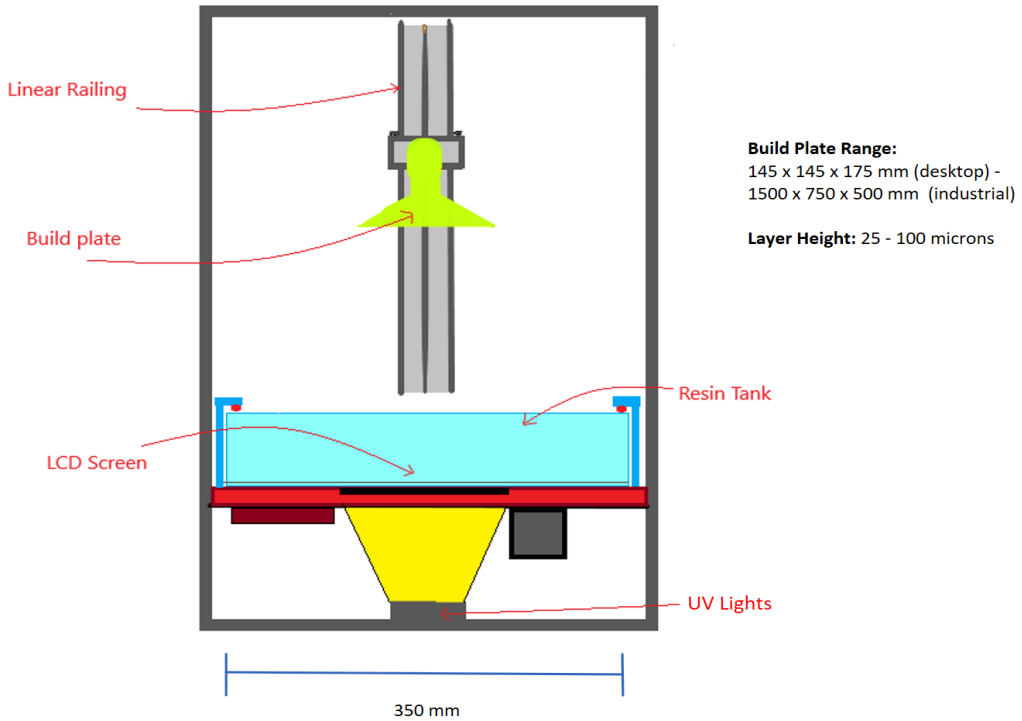

Figure 4. Sketch/diagram of DLP printer candidate [17].

In the DLP printer, a projector cures an entire layer of the print surface onto the bottom of the resin tank [18]. The use of a bottom-up system allows users to monitor their print as it is being built to ensure it prints smoothly and accurately.

The use of a projector increases the print speed, as compared to standard SLA printers, which use a single layer to cure the resin. DLP printers, as well as other SLA printers, require a post-processing treatment, to remove harmful chemicals from the build, which increases the time and effort dedicated to printing a design [19]. Additionally, due to the use of chemicals in DLP printers, fans are necessary to disperse toxic fumes. [20]

3.1.4 Conclusion

Based on the engineering specification outlined in section 2, as well as a comparison of the components of different types of printers, it was decided that the design of the printer would be strongly based on a CoreXY FDM printer. This is due to the large variety in build volume offered by the printer design, as well as its relatively cheaper cost and ability to create accurate and precise prints. Although we did not move forward with a delta printer, we decided to incorporate aspects of the delta design into our printer such as the idea of having stationary motors to minimize the energy that would be taken to move heavy motors and instead focus on the precision of the linear X-Y-Z motion, which is what drew us to a CoreXY design.

3.2 Mechanism Selection for the Candidate Design

In order for Candidate Design 1 to best meet the engineering specifications, attention needs to be paid to the choice of mechanisms in the printer. The following sections describe potential candidates for various mechanisms in our design as well as their benefits and drawbacks.

3.2.1 Build Plate

The build plate is vital to any 3D printer as it is the surface on which the designs will be built on. In order to minimize warping, it is important to consider bed adhesion [21]. This is the "ability of the filament to stick to the build surface while printing" [21]. If the filament is unable to adhere to the build plate, then prints are often not functional or destroyed in the printing process. As well, it is important to consider the thermal conductivity of various build surfaces [22]. Upon heating, some surfaces may heat up slowly or unevenly. As well, the surface itself may expand and change shape. It is crucial that the build surface stays level and has an even distribution of heat to have precise prints.

Borosilicate glass

Borosilicate glass is a popular choice for build surfaces [22]. It is widely well-received because it is flat, stiff and has a low coefficient of thermal expansion (4.0×10^{-6} m/(m °C) [22, 23]. This means it won't expand much upon heating, which will make the prints less likely to warp. Glass also has a low thermal conductivity; but despite it taking longer to heat up, it spreads the heat evenly on the surface [22]. A downside to glass is that it requires the use of an adhesive to ensure the print sticks well to the surface (i.e hairspray, glue stick, etc) [22].

Aluminum

Aluminum is another viable option for a build surface. The material is lightweight, which "reduces the load on the z-axis" motion [24]. It has high conductivity and is able to distribute heat evenly across the surface as well [24]. However, it has a higher coefficient of thermal expansion (24×10^{-6} m/(m °C)) [23]. This can impact prints as the aluminum starts to expand, it concaves, leaving an unlevel build surface [24]. Similar to glass, aluminum also requires adhesive to ensure optimal printing [24].

Polypropylene

Polypropylene is the final candidate. It differs from glass and aluminum as materials are able to adhere to the surface without any added adhesives [22]. As well, they're known for leaving a very smooth surface at the bottom of prints [22]. It is very flat, lighter than glass, and quite cheap [25]. Similar to aluminum, these sheets have the tendency to warp over time. They are not as reliable as glass as they can expand more easily (coefficient Of thermal expansion 25×10^{-6} m/(m °C)).

3.2.2 Heated Beds

Heated beds are often added to 3D printers as they keep the build plate and print heated to minimize the effect of warping on the design [26]. They allow for better adhesion of the material to the build plate, avoiding the designs getting destroyed in the print process [21]. As well, materials like ABS need to be printed using a heated bed, or else they do not print well and result in below-standard prints [26].

PCB Heaters

They are very thin and require little vertical clearance when incorporated into the design [27]. They are known to provide an even heat distribution across the print bed and are often used in addition to a glass build surface [27]. However, a downside is that they can take a while to heat up depending on the thickness of the glass that is selected [27].

Kapton (Polyamide) Heaters

Kapton heaters consist of a heating element in between two sheets of polyamide [27]. They are also thin, heat up quite rapidly and are capable of being produced in a variety of shapes [27]. These heaters are capable of maintaining temperatures between -328°F to 329°F [28].

Silicone Rubber Heater

Silicone rubber heater is a type of flexible heater that can be stuck to the bottom of the build plate to allow it to be heated [29]. These heaters can easily be attached to the material that is to be heated (but is commonly used with aluminum) [29, 26]. They are relatively cost-effective and can allow for design flexibility since they're available in different shapes and sizes [29].

3.2.3 Extruder

The extruder on a 3D printer controls the amount of filament to be pushed out through the hot end onto the build plate [30]. The two most common types of extruders are the Bowden and direct extruders [30]. These both have their strengths and weaknesses and can also include modifications to improve their performance.

Direct Drive Extruder

A direct extruder has the filament fed directly from the extruder into the hot end [31]. These also have a stepper motor and extruder attached to the carriage [31]. Due to this, direct extruders have a small "distance between the drive mechanism and the hot end" [30]. This makes them more compatible with flexible materials, as the material is less likely to jam within the extruder [30]. A downside to direct extrusion is that the motor being attached to the carriage on the XY axis increases the weight of the extruder [30]. This diminishes the speed that the printer can produce designs at, as well as the precision of the print [30].

Bowden Extruder

Bowden extruders have the cold end mounted to the frame of the printer, with filament then fed through a tube into the hot end [31]. This decreases the weight of the carriage as the motor and gears are not positioned around the hot end [30]. A major benefit of this is that it allows for prints that are more precise and accurate [32]. However, as mentioned above, the increased distance that the filament has to travel causes issues with flexible or softer materials jamming [30].

The figure below illustrates the difference between direct and Bowden extrusion.

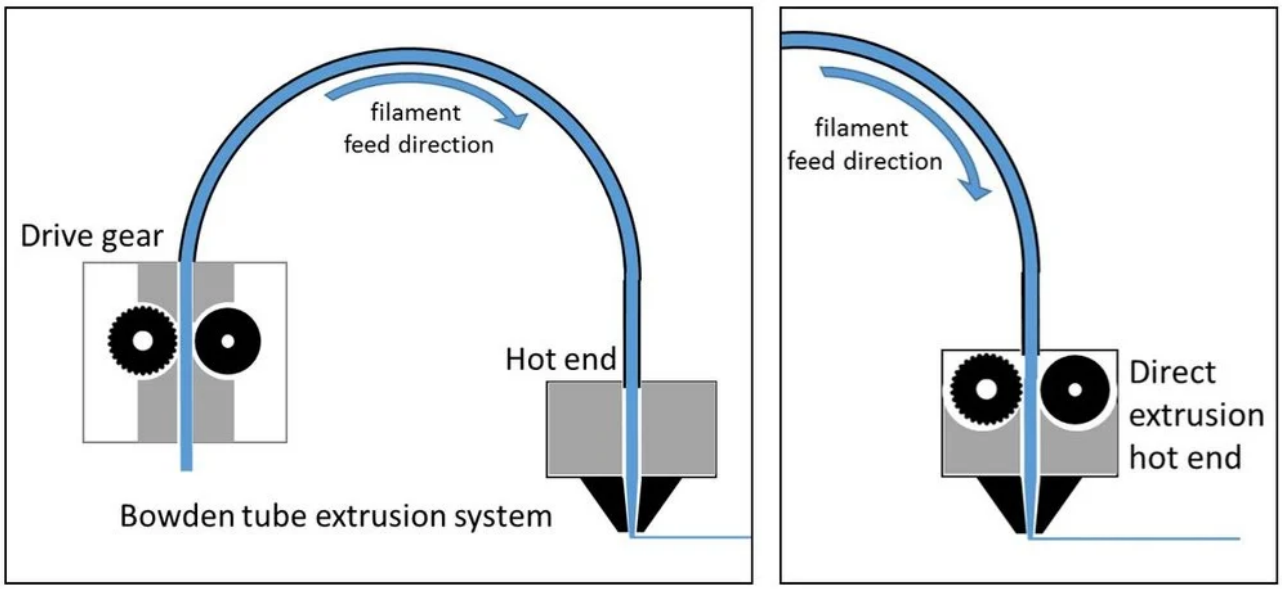

Figure 5. Bowden and Direct Extrusion mechanisms comparison [33].

Dual-Gear Drive Extruder

Having a geared extruder is a modification that can be made to Bowden or a direct extruder by creating a gear ratio within the extruder [31]. Typically, the turn of the stepper motor has a direct influence on the amount of filament getting pushed through to the nozzle (teeth are directly attached to the motor) [31]. With a geared extruder, it gives you a mechanical advantage by adding torque to help push the filament through the nozzle [31]. As well, this also reduces the stress on the stepper motor, allowing for the choice of a lighter motor if desired [31]. The downfall of this candidate is that adding a gear ratio significantly increases the cost of the extruder [31]. Typically, non-geared extruders are found in cheaper, hobbyist printers [31].

3.2.4 Printer Nozzle

As the printer nozzle is responsible for extruding the heated filament, it is important to consider different alternatives in terms of bore diameter and material [34]. A nozzle that can aid in the creation of precise prints will help the design meet the specifications. After researching, it is clear that nozzles with a bore diameter of 0.4 mm or less are capable of producing models with high precision [34]. Most standardized nozzles with smaller diameters range from 0.1 to 0.4 mm [34]. However, options such as 0.1 mm are extremely precise and not as common, driving up the cost of such parts [35].

Brass

Brass is very good at conducting heat and these nozzles are on the cheaper side [34] They are commonly used to print materials that are non-abrasive [34]. This is because a downfall of brass is that it's prone to wear, which can compromise the integrity of the nozzle ruining the print's quality [34]. Brass is compatible with materials such as PLA, ABS and PETG [34].

Stainless Steel

Stainless steel nozzles are less prone to wear than brass nozzles, however, they are not as good at conducting heat [34]. Stainless steel is compatible with the same non-abrasive materials as brass [34].

Hardened Steel

These are commonly used in applications requiring abrasive materials, making them compatible with the majority of materials available [34]. However, these nozzles are known to produce prints of a lower quality, because of the use of a hard metal material [34]. As well, hardened steel has a lower thermal conductivity than brass and stainless steel, making temperature adjustments more challenging [34].

3.2.5 Z-Axis Mechanisms

There are a number of mechanisms that can achieve linear motion. To ensure that the printer has a high degree of precision and the system is able to move along the axis for a large number of cycles throughout the printer's lifetime, mechanisms such as the lead screw, ball screw and belt drive were explored.

Belt Drive

Precise linear motion can be achieved through a belt system. This system would also allow for a large range of motion in the z-axis. However, the system would have problems with wobble and backlash, even with the incorporation of timing belts.

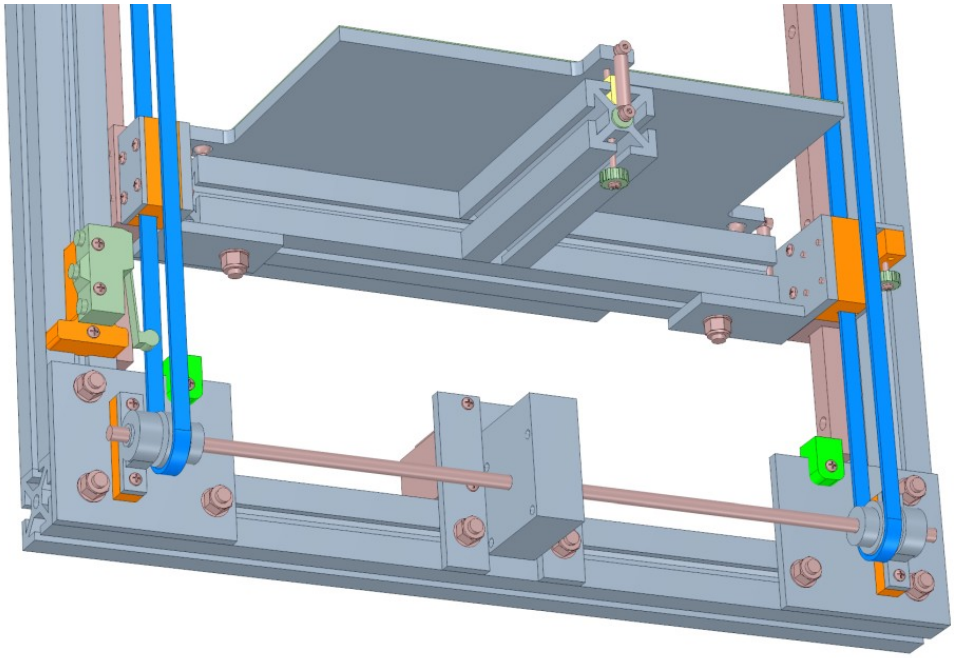

Figure 6. Diagram of a belt drive system. [36]

Lead & Ball screw

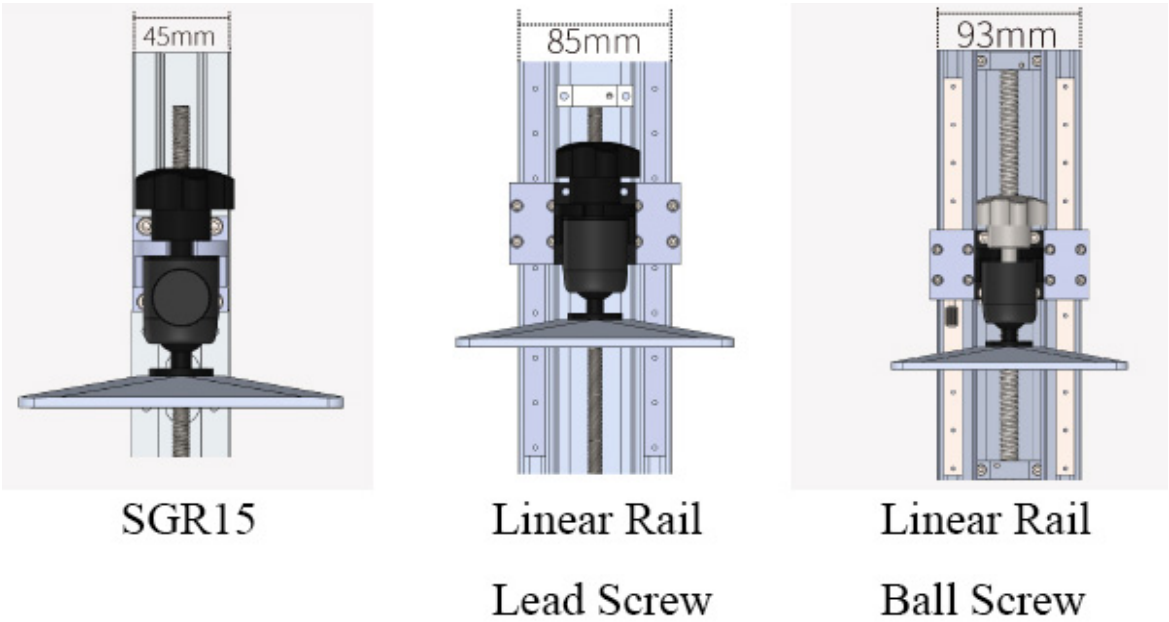

Figure 7. Diagram of the linear rail, lead screw and ball screw system for z-axis motion. [37]

The leftmost diagram is a linear rail system that does not provide a lot of rigidity and tends to loosen up over time (a fair bit of movement in all directions) [38]. The rightmost diagram is a ball screw which improves upon the lead screw system by using ball bearings to eliminate the friction between the nut and screw [39]. Generally, ball screws are better for applications that require smooth motion, efficiency, accuracy, precision, and prolonged continuous or high-speed movement [39]. However, a new generation of precision lead screws significantly increases lead screw accuracy by incorporating mechanisms such as safety clutches, linear rails, linear bearings and guides, shaft couplers (minimum Z-axis wobble), and anti-backlash spring-loaded lead screw nut, and a nut housing.

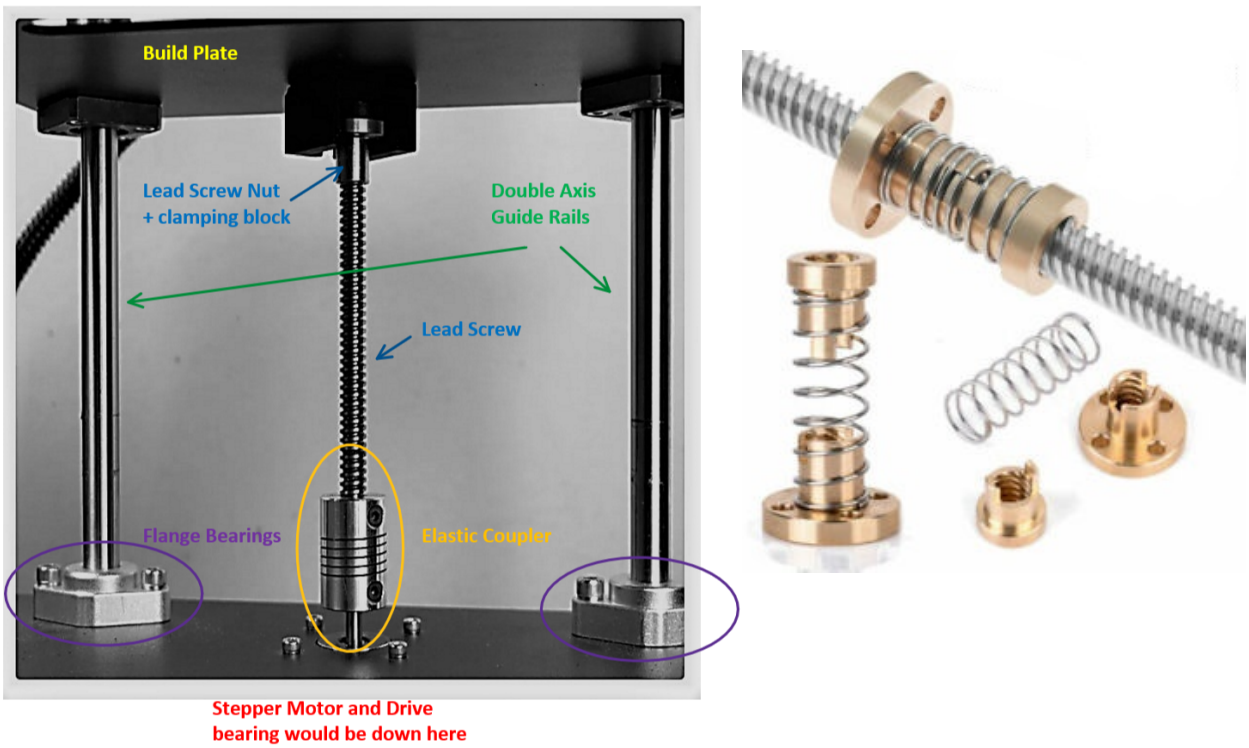

Figure 8. Diagram of the support mechanisms for the lead screw (left) and anti-backlash spring-loaded nut mechanism (right) to increase the accuracy of the lead screw. [38, 39]

Linear Rods

Linear rods are cylindrical metal rods that can be used for motion support in the z-axis. They are usually coupled with a linear bearing for support [40]. However, they are not very stiff and are prone to bending [40]. Their major benefit is that they are an extremely low-cost alternative [40].

Linear Rails

Linear rails are extremely stiff metal rails [41]. They also contain a bearing block, with either ball or roller bearings on the inside [40]. This improves the motion quality overall, as it yields a smoother motion resulting in more precise prints [41].

3.2.6 Motors

Motors will be incorporated into the design as a source of power to drive the core XY belt system, the chosen candidate for the Z-axis motion, and the movement of the extruder. In this section, different types of stepper motors will be compared. As learned in class, stepper motors are a special type of AC synchronous motor. These motors move in discrete angular steps, making them suitable for CNC applications like 3D printing [37]. The following candidates are standardized stepper motors that are widely available on the market at low costs [29].

Pancake Motor

Pancake motors have a low torque rating of 20-25 N · cm [29]. They are best suited for smaller 3D printers that will not need a significant amount of torque or will be operating at lower speeds [29]. They are used with direct extruders and will need to be implemented into the design if a direct extruder is selected [29].

Standard Motor

Standard Motors have a torque rating of 40-45 N · cm [29]. Due to the increased torque, they're compatible with more complex systems than the pancake motor, such as a Bowden extruder or core XY belt system [29].

High Torque Motor

High Torque Motors have a torque rating of 50-56 N · cm [29]. Their most common use is for moving build plates made of heavy materials [29]. However, these motors are often too large and supply more torque than is necessary for the application [29].

3.2.7 Belts

Belts are incorporated into our design in the core XY belt system in order to allow motion in the X and Y-axis. The choice of belt can impact the print if it is prone to slippage. Therefore, the choice of the belt should minimize slip in order to create functional and precise prototypes.

Flat Belt

The flat belt is a very simple and low-cost solution [43]. However, it is very rudimentary and does not have any kind of strengthening fibres to increase its lifespan [43]. It is best suited for applications with low torque, as it is prone to slippage in ones with high torque [43].

Timing Belt

Timing belts have a flat surface on one side of the belt and teeth on the other side [43]. This gives the belt more grip, making it less prone to slippage than the flat belt [43]. The teeth on the timing belt can engage with a timing belt pulley, for attachment to the motor shaft.

V-Belt

V-shaped belts have a cross-section shape similar to a v. They may sometimes be strengthened with fibres to increase their lifespan [43]. Overall, they are best suited for medium-high torque and low to high-speed applications [43].

3.2.8 Bearings

Ball Bearing
Ball bearings are highly standardized and a cheap alternative for motion support [44]. They can withstand relatively high load and speed applications [44]. Generally, they can tolerate radial forces quite well but are not suited for axial or thrust forces [44]. They can also be sealed to mitigate damage caused by the environment.

Linear Bearing
Linear bearings support the linear motion, which is useful when coupled with a linear rod for z-axis motion [44, 40]. They have smaller rollers than the ball bearing, better suited for lower speed and load applications [44].

Roller Bearing
Roller bearings are similar to ball bearings, however, they use roller elements instead of balls. This creates a larger contact surface between the roller and the outer shell of the bearing [44]. Overall, this yields a higher force tolerance but at a greater cost [44].

3.2.9 Filament Types
As outlined in the specifications, to differentiate the design from a hobbyist printer, it should be compatible with more materials than just PLA; one of the cheapest plastic materials [45]. However, the filament compatibility will heavily rely on the choice of the extruder. Section 4 will describe the filaments compatible with the selected extruder.

4.0 Design Analysis and Description

Moving towards the final conceptual design, our group has selected Candidate 1, which is the FDM CoreXY printer. Candidate 1 best meets our engineering specifications of cost, precision, minimal post-processing steps and build volume, and will allow us to achieve design flexibility, so that our printer can be utilized in a variety of industries.

When narrowing down the candidates, we first ruled out Candidate 3, which was an SLA printer. We defined our cost range within the engineering specifications to be between $2000-$5000. As well, we wanted the build volume to be larger than a typical hobbyist printer, thus driving the cost of the design up. SLA printers will typically cost around $10,000 for larger build volumes [S18]. In addition, the resin used is on average $149-$200/L, whereas filament for an FDM printer is $50-$150/kg [S18]. As such, the characteristics and cost of the SLA printer made it an unideal candidate, and was out of scope of our desired price range.

Another factor that led us to disregard Candidate 3, is that although SLA printers have a greater dimensional accuracy than FDM printers with a precision level of ±0.01mm, we can achieve a similar precision in an FDM printer at a lower cost [2]. Mechanisms such as the build plate and its embedded heated bed as described in section 4.1 were selected to minimize warping, which

is the main cause for inaccuracies in FDM prints. As well, the selection of a smaller nozzle will allow for smaller layer heights in the range of 50- 200 microns [10].

In regards to Candidate 2, which is the Delta printer, the base of the printer limits the printer in terms of build volume. Delta printers are typically used to create taller prints, which was not outlined as a necessity in the specifications [47]. In fact, the Delta printers affinity for tall prints, rather than a large range of print sizes, serves as a detriment to the candidate design. Their small, circular base makes it difficult to make larger prints in the XY plane [47]. Thus, it was collectively decided that it would be easier to scale up the build volume of a printer that is not in the delta form.

Lastly, the Core-XY belt design meets our specifications with respect to precision and quality. There are two stepper motors used in the belt system, and they are attached to the side of the printer [48]. This significantly reduces the weight that the system has to carry in order to generate prints, thus reducing the momentum when the motion system changes direction [48]. This creates better print quality overall, reducing ghosting and ringing [49]. As well, this reduction in weight allows for prints to be created at higher speeds, without compromising the quality [49].

4.1 Justification of Component Selection

Table 2. Selected parts and justification for the selection.

Part	Selected Type	Justification
Overall Printer Dimension	421 x 421 x 425 mm	These dimensions enable large enough size to accommodate for the build volume, but leaving excess space for the other mechanisms. Allows for accuracy with the lead screw mechanism.
Build plate (surface)	Borosilicate Glass 214 x 214 x 140 mm	The low coefficient of thermal expansion (4.0×10^{-6} m/(m °C) for borosilicate glass makes it an optimal solution as it does not expand much upon heating [23] . This prevents prints from warping and will help to increase the precision of our designs.
Heated Bed	PCB heater 200 x 200 mm	Adding a heated bed to the printer will minimize the effect of warping on the print [26] by helping keep the print heated throughout the entire printing process. A PCB heater was selected due to its compatibility with glass and ability to distribute heat evenly across

		the entire build surface [27].
Extruder	Bondtech BMG Extruder 1.75 mm (Dual Gear-Drive extruder) (Bowden Set up)	A Bowden extruder set-up was selected as it allows for more precise and accurate prints as a result of the weight on the carriage being reduced [30]. A Bondtech BMG Extruder was selected for its 3:1 gear ratio [50]. This way, it is able to produce enough torque to move the filament through the nozzle, without compromising speed [50]. In addition, it has dual hobbed gears that provide a constrained filament path [50]. This not only reduces jamming in the nozzle but also makes the printer compatible with abrasive and non-flexible filaments [50].
Nozzle	Stainless Steel 1.75mm x 0.25 mm	Stainless Steel does not contaminate the prints with lead unlike brass, which could potentially pose issues for biomedical applications (coming into contact with skin) [34]. A 0.25 mm bore diameter can allow for precise prints (< 0.4mm), but is still a standard size, reducing costs [35].However, if the user would like to print abrasive materials (which the extruder is compatible with), then they may have to opt for a hardened steel nozzle.
Z-Axis Motion Mechanism	Lead screw + linear rails (with rollers)	The lead screw provides precise motion along the z-axis and the supports decrease wobbling while increasing the lifetime of the leadscrew. Linear rails offer greater precision than a linear rod due to their manufacturing tolerances [41]. Overall, this improves the print quality, allowing for a smoother motion of the carriage [41]. They also reduce backlash, as they are extremely stiff compared to a linear rod [41].
Motors	Nema 17 Bipolar 45 Ncm [S16] (Standard Motor)	A torque rating of 40-45 N cm is capable of driving a Bowden extruder setup and CoreXY belt system, which are the mechanisms that we chose. [29] The Nema 17 motor is inexpensive ($9.95) and will help to minimize the cost of our design, while still meeting the torque requirement [51].

Core XY Belt System	Rubber Timing Belt	The CoreXY Belt provides reduction of torque factors compared to the H-Bot system. When calibrated properly, it increases accuracy of the nozzle movement and improves quality of the final print. The rubber timing belt offers these features: No-slip, easy maintenance, minimal vibration, precise, no stretch/elongation due to wear, wide speed range, no need for lubrication. [52]
Bearings	Sealed Ball-Bearings	Sealed ball bearings are used to support the z-axis motion. They were selected to minimize the cost within our design [44]. As well, we selected a sealed bearing in order to prevent the rolling elements from getting damaged and compromising structural integrity.
Casing Material	Aluminum Frame + PPE casing with acrylic window.	A clear acrylic window on the front side of the printer would allow the user to safely inspect the printing process. The enclosed casing is made from PPE which allows for conservation of uniform heat in the print space and protects the print from potential contaminants. Aluminum frame is light and durable to minimize printer weight while conserving its strength.
Filament Types	1.75 mm Filament	The 1.75 mm filament allows for faster print speeds due to its smaller diameter [53]. As well, it has “more control and precision over the amount of filament extruded.” [53]. The Bondtech BMG Extruder is compatible with almost every material on the market [50]. It can use both flexible and non-flexible materials [50]. It can be used with the most common and inexpensive filaments, such as PLA and ABS [50].

4.2 Features of the BioPrint MKII

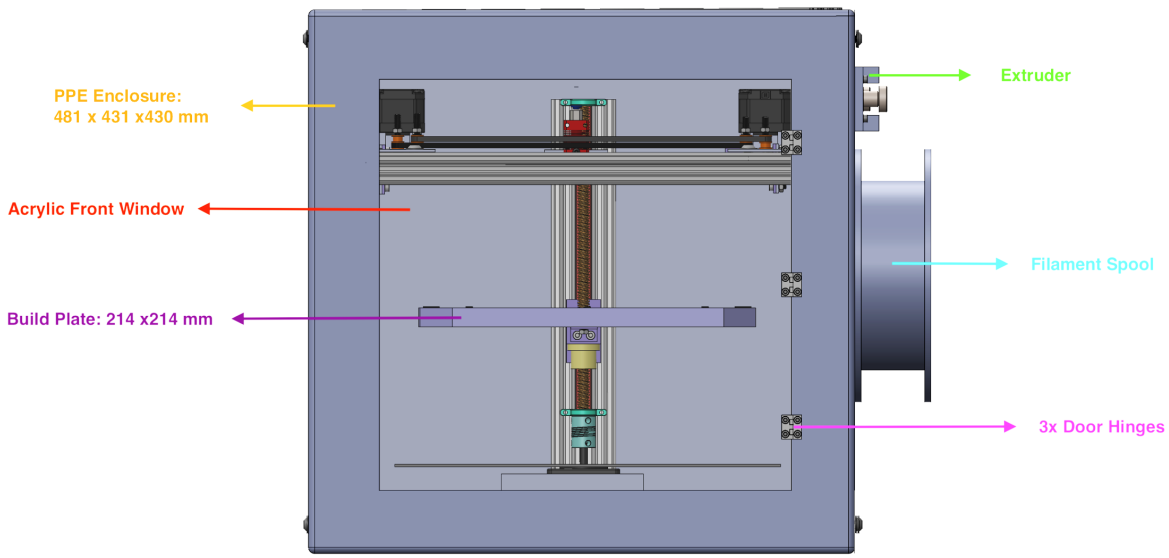

Figure 9. Front view of the 3D printer design.

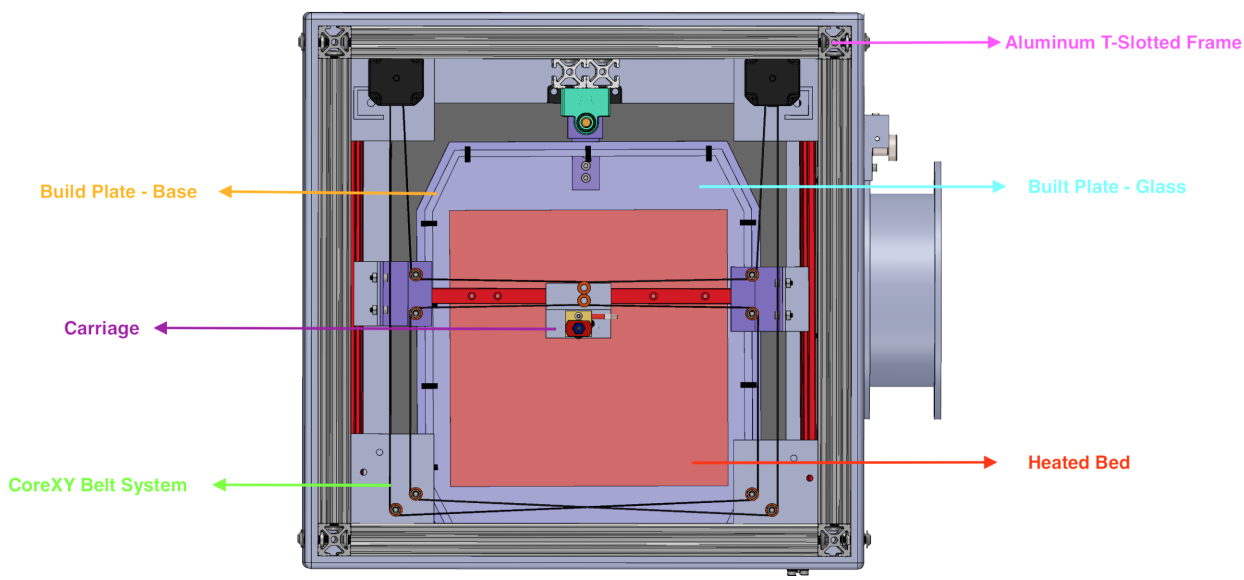

Figure 10. Top view of the 3D printer design.

Our printer design, the Bioprint MKII, was designed to differentiate from existing 3D printers in terms of size and print quality. Most 3D printers on the market either maximize build volume while providing moderate print quality or focus on quality prints for small build volumes. To create a printer suitable for engineering, biomedical, architecture, and other applications where print quality is important, this printer has a distinctly large build volume while maximizing print quality. Bioprint MKII is also designed to minimize post-processing steps and design complexity to accommodate for small office spaces and entry-level operations.

CoreXY Design:
This printer combines the features of a professional 3D printer in terms of precision, print quality, and safety in an office-friendly design. Bioprint MKII features an FDM type print mechanism to accommodate easy maintenance and fewer number of steps to finalize the print. The CoreXY belt system allows for minimal vibration and optimal precision while optimizing cost, unlike SLA printers.

Printer Size and Build Volume:
The size of Bioprint MKII was decided based on the build volume and overall printer size to allow for operation in small office settings while having a large enough build volume to accommodate a variety of print sizes. The build volume for this printer is 214 x 214 x 140 mm and the overall printer size is 421 x 421 x 425 mm. The overall dimension of Bioprint MKII allows it to occupy only one half of a regular 100x60 cm desk while enabling the users to create large print volumes of up to 214 x 214 x 140 mm.

Casing:
While designing this casing, its durability, weight, safety, and aesthetics were the key considerations. Since the Bioprint MKII is meant to be suitable for small office places, it is important that users can move it around with ease or store it on a desk. The casing of this printer features a T-bone aluminum frame for maximum durability and low weight, while the front casing is made up of acrylic to enable inspection of the print on the process. The remaining sides of the casing are made up of PPE which has good resistance to heat distortion and high resistance to chemicals, making it suitable for 3D printer enclosures [54]. Overall, the casing of Bioprint MKII is light, durable, aesthetically pleasing, and safe for a small office environment.

Extruder and Filaments:
Bioprint MKII features a BondTech extruder which differentiates it from hobbyist printers by being compatible with all types of filaments. Some materials that are used in common engineering applications are not always compatible with hobbyist printers but are compatible with Bioprint MKII. Some of these materials are:

TPU: Is known for having “minimal warping and shrinkage” [55]. As well, it is highly durable and flexible [55].

PETG: Has very high dimensional accuracy, capable of producing the precise prints outlined in our specifications [56]. It also produces no odors, and can come in contact with food, making it an extremely safe material to work with [56].

Carbon Fibre PLA: Abrasive material that is extremely rigid; can be used to produce functional prototypes [57].

4.3 Device Operation and Support Mechanisms

4.3.1 X-Y axis

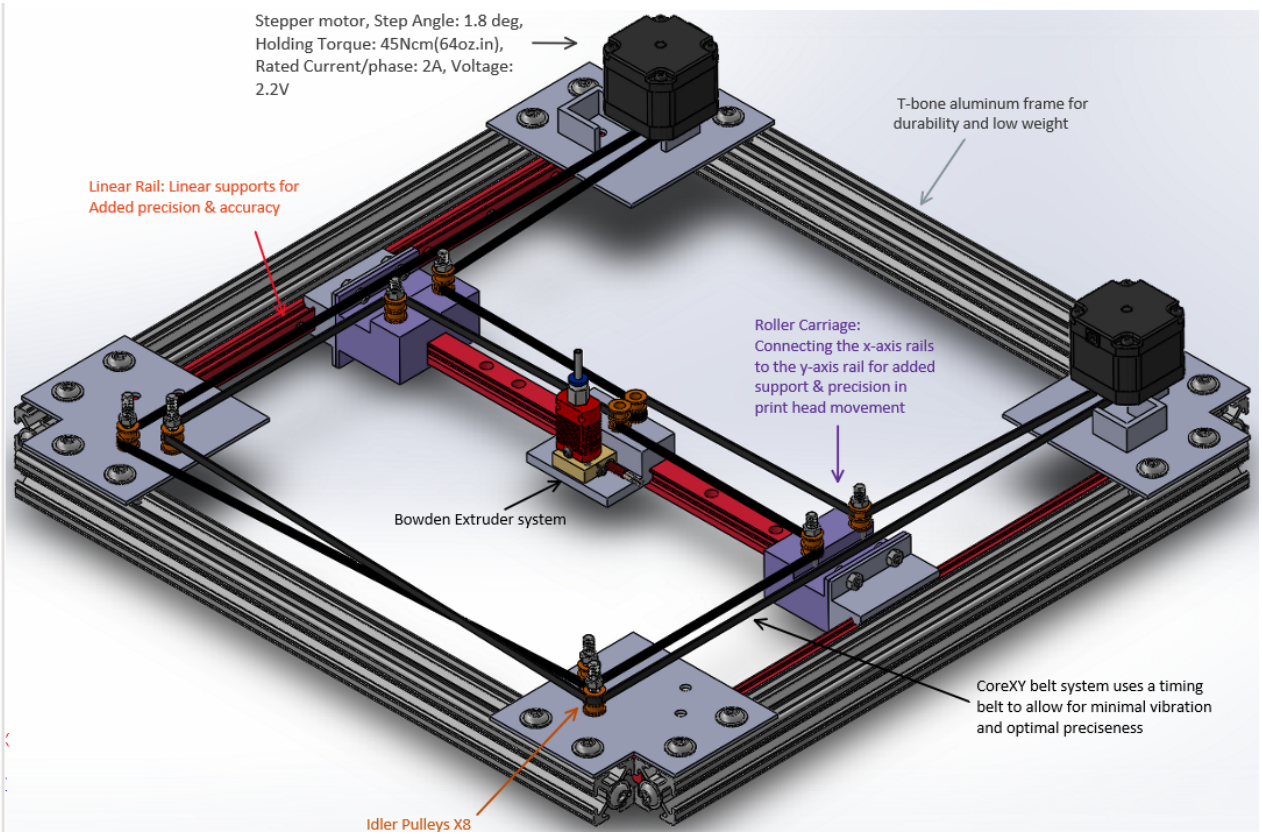

Figure 11. CoreXY belt mechanism of the printer model.

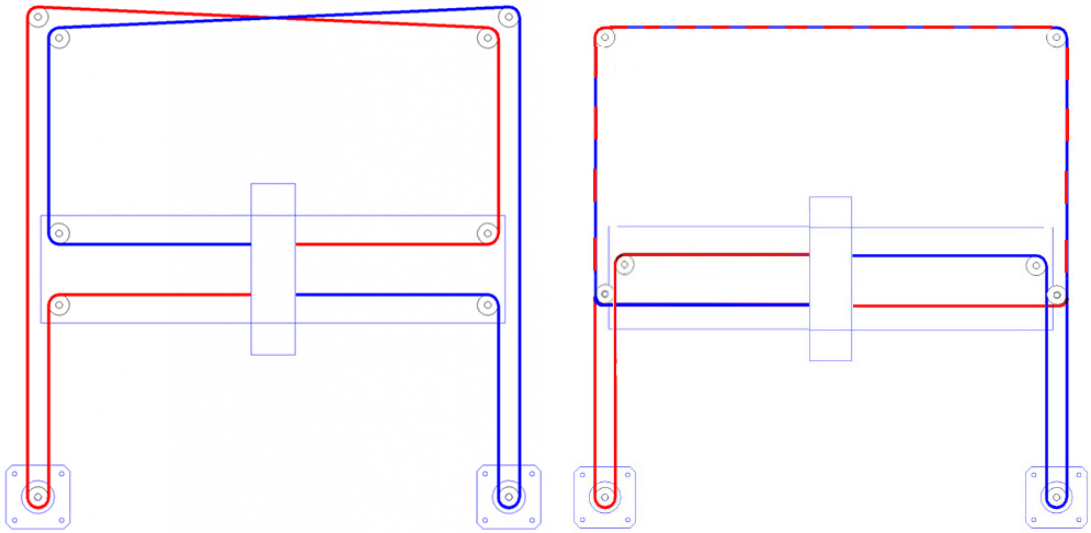

Figure 12. Simplified diagram of CoreXY mechanism in two different pulley assemblies [58].

The motor is mounted on the casing to constrain its movement and rotation on all axes. The circular motor shaft has a flat edge and the pulley has a hole designed for set screw attachments. The timing belt pulley sits on the motor and is connected to the motor shaft by a set screw, which is a suitable shaft attachment method for this case since the torque is moderate.

There are two timing belt pulleys attached to the stepper motor that move the timing belts, four idler pulleys to redirect and arrange the belts in CoreXY layout, and four jointer pulleys for attaching belts to the carriage. The belt used in this printer is a timing belt, which has v-shaped teeth on one side and a flat surface on the other.

The teeth of the timing belt pulley match the teeth on the timing belt. The timing belt covers the pulley at an angle close to 90 degrees which generates a moderate point of contact/engagement with the pulley. The bulges above and under the meshing part of the pulley restrict the belts' axial motion and prevent it from moving axially on the pulley.

Belts are connected to the carriage via shafts, set screws or nuts and bolts.

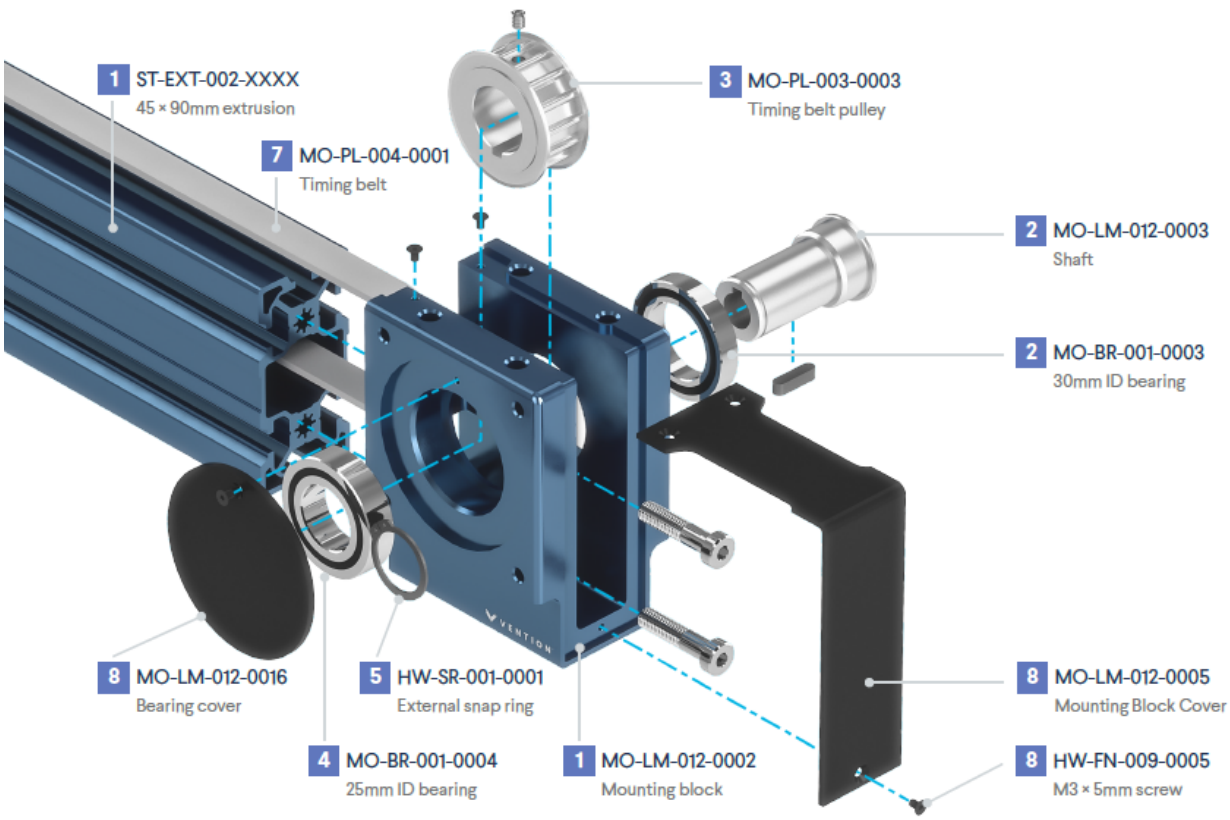

Figure 13. Pulley to carriage attachment method and components [59].

The movement of the CoreXY belt system in both the x and y axes is controlled by 2 stepper motors, one at pulley A and one at pulley B.

- For the diagonal movement, → only one pulley must be rotated.
- For movement solely in the x-direction, → both pulleys must rotate in the same direction.
- For movement solely in the y-direction, → both pulleys must rotate in the opposite directions [60].

The roller carriage sits on linear rails, and linear movement occurs through recirculating roller bearings. This system has less friction than a sliding carriage and a greater maximum load than ball bearing carriages.

4.3.2 Filament Movement

The cold end of the extruder uses a stepper motor and a rotating mechanism to push the filament through PTFE tubing, which guides it to the hot end of the extruder. Due to the distance travelled by the filament in a Bowden extruder system, the cold end must provide enough torque to push the filament to the hot end easily and efficiently [61]. A stepper motor is a good option for this function, as it applies full torque at low speed. A gear is located on the shaft of the motor in order to apply maximum torque to the filament. The gear teeth "bite" into the filament, thus applying the motor's full torque onto the motion of the filament and moving it through the cold end [50]. A gear attached to a lever arm supports and enhances the motion of the filament on the opposite side of the cold end. Spring must be applied to the lever arm in order to maintain pressure on the filament [61].

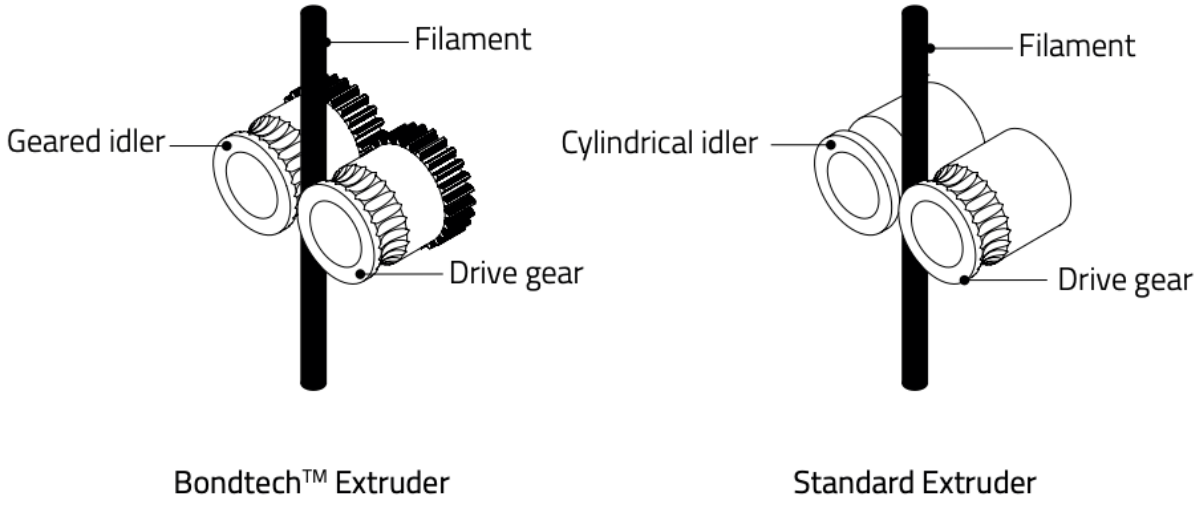

Figure 14. Comparison between a standard extruder and Bondtech extruder [50].

4.3.3 Hot End and Nozzle

The hot end of the extruder system can be divided into three zones. In zone 1, the filament must be kept below its glass transition (T_g) temperature so that the material does not expand and hit the extruder walls. To prevent the risk of this occurring, the width of zone 1 can be expanded. A cooling fan is used in zone 1 to maintain a low temperature.

Zone 2 consists of the heat sink, which cools down the “cold end” of the heat break. At the heat break, the temperature transitions from cold to hot. This transition should occur as quickly as possible to ensure the controlled melting of the filament.

In zone 3, the heater block works to heat up the filament. The heater block consists of a thermistor, which senses the block’s temperature, and the heater cartridge, which heats up the block. The melted filament is then pushed through the nozzle onto the print bed [50].

The nozzle size and diameter determine the resolution of the printed item, as well as the speed at which it is printed. The diameter of the nozzle has an inverse relationship with the print’s resolution and a proportional relationship with the speed of the print [62]. A 0.25 mm bore diameter allows for more precise prints compared to industry-leading Original Prusa i3 MK3S+ printer with similar build volume, while still reducing costs due to its standardization [63]. The material of the nozzle also determines which filaments can be used in printing. Harder nozzle materials are capable of extruding more abrasive materials at higher temperatures.

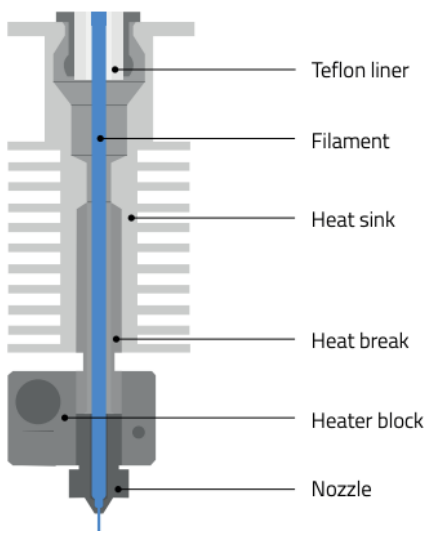

Figure 15. Hot end and nozzle assembly diagram and components [15].

4.3.4 Z-Axis

The stepper motor located at the bottom of the printer is connected directly to the shaft coupling. The coupling is capable of supporting parallel, axial, and angular misalignment, and almost completely removes backlash. It also does not require lubrication. The shaft coupling connects the motor to the lead screw, which is supported by two shielded steel ball bearings on the end. The ball bearings reduce wobble and support the lead screw's rotation. The shielded bearings can also dissipate heat more efficiently than sealed bearings. As the lead screw rotates, the flange nut moves up or down. The flange nut is spring-loaded, which gives it anti-backlash capabilities. It is directly connected to the print bed and the print bed's movement mirrors that of the nut. There are also roller carriages that are connected to linear rails on either side of the lead screw, which support the print bed's motion and ensure accuracy and precision.

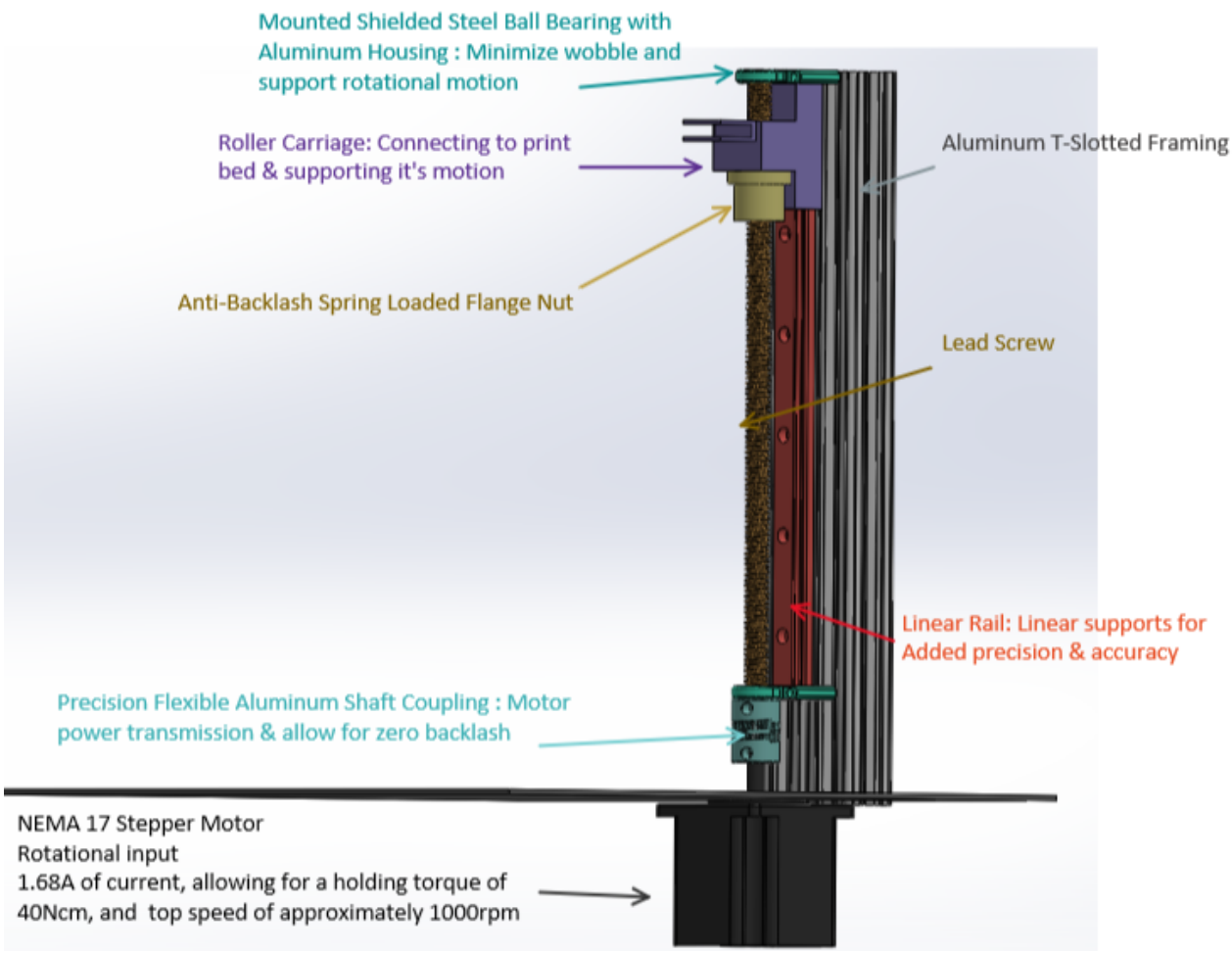

Figure 16. Z-axis motion mechanism with lead screw assembly diagram from CAD model.

5.0 Conclusion

Through constant iteration and candidate designs, Bioprint MKII has succeeded to meet our specifications of precision, cost, versatility, and build volume. Its overall size is suitable to store in a small office setting while its build volume is large enough to accommodate a variety of print sizes. The aluminum-glass print bed allows uniform heat distribution and minimal thermal expansion and combined with the PCB heat bed, it prevents warping and failure of the prints. The Bondtech BMG Extruder provides maximum compatibility with a wide range of filaments while minimizing jamming and weight on the carriage, enabling precise prints. The z- axis mechanism is developed to provide precise motion along the z-axis and the supports decrease wobbling and backlash while improving the print quality. Additionally, the CoreXY Belt system increases accuracy of the nozzle movement and improves quality of the final print.

Even though Bioprint MKII meets the specifications, there is still room for development in its design. In the design process, we have come across a trade-off between cost and addition of an air filter to enable safe printing in a small environment with poor air circulation. Assuming that the users will not be in the same room as the 3D printer while using materials such as ABS and PLA, which produce toxic fumes, we decided to discard a fully enclosed design with an air filter to minimize the cost. However, depending on the usage conditions and the setting of the printer such as in the same room as the users with poor air circulation, an air filter and enclosed printer design is necessary for the users' safety.

Overall, the Bioprint MKII was a successful final design for the given specifications, but depending on the client and the usage conditions, the decision between the cost and safety precautions might be different and Bioprint MKII may require additional equipment such as a separately bought 3D printer cover or a complete redesign of its casing with an addition of an air filter.

6.0 Cost Breakdown

Part Name	**McMaster-Carr Part Number/ Misc. Part Number**	**Quantity**	**Unit Cost**	**Final Cost**
Aluminum T slotted framing rail	47065T101	12	$7.79	$93.48

Aluminum T slotted framing rail	47065T101	4	$7.79	$31.16
Steel Guide Rails	9215T81	4	0.28/mm	$336.00
Steel Carriages	9215T62	3	$194.76	$584.28
PCB heater	BED-MK3-214214-##120	1	$30.00	$30.00
Aluminium bed	9146T64	1	$3.41 per 1 ft	$11.70
Lead Screw	7549K57	1	$71.05	$71.05
Coupler	9861T111	1	$97.25	$97.25
Flange nut	2391N11	1	$60.73	$60.73
Mounted Ball bearing	8600N13	1	$33.18	$33.18
Shielded ball bearing	8600N13	1	$33.18	$33.18
Z axis motor	6627T53	1	$81.09	$81.09
Bondtech BMG Extruder - 1.75mm	Product No. M88WAUL2	1	$99.00	$99.00

Belt Motor	6627T66	2	$61.71	$123.42
Belt	6484K158	2	$19.79	$39.58
Belt Pulleys	1375K11	12	$9.91	$118.92
T-Slotted frame nuts	47065T142	60	$2.30 per pack of 4	$34.50
Extruder hot end	HA1001	1	$34.96	$34.95
Extruder motor	6627T39	1	$67.57	$67.57
Extruder gear	1375K11	2	$9.91	$19.82
Casing	9146T64	5	$3.41 per 1 ft	~$50
Casing Door	1227T319	1	2.11 per ft	$4.45
Door Hinges	1603A2	3	$1.53	$4.59
M4 Nut	90592A090	11	1.41 per pack of 100	$1.41
M4 screw	91290A144	25	8.95 per pack of 50	$4.50
M5 Nut	90592A095	10	$1.76 per pack of 100	$0.20
M5 partial screw	91290A254	10	$8.95 per pack of 50	$1.79
M2 Nut	90592A075	4	$1.59 per pack of 100	$0.10

M2 screw	91290A017	11	$11.96 per pack of 100	$1.20
M3.5 Screw	91290A382	14	13.33 per pack of 10	$18.66
M3.5 Nut	90592A104	2	5.14 per pack of 100	$0.10
Power supply	FYSETC Prusa i3 MK3	1	$89.95	$89.95
				$1852.06USD (2,370.02CAD)

7.0 Assembly Drawings

7.1 Entire Assembly Drawings

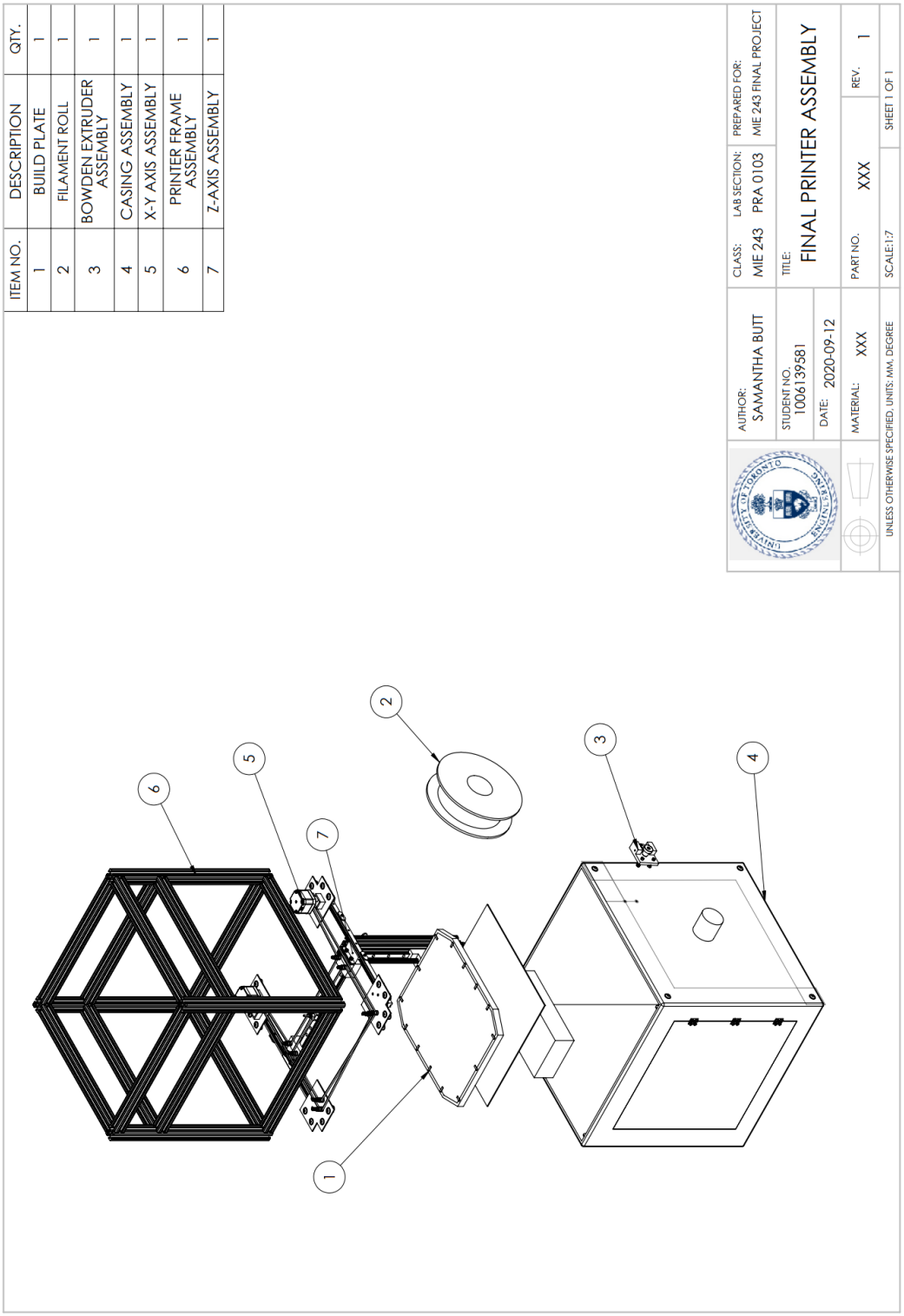

SOLIDWORKS Educational Product. For Instructional Use Only.

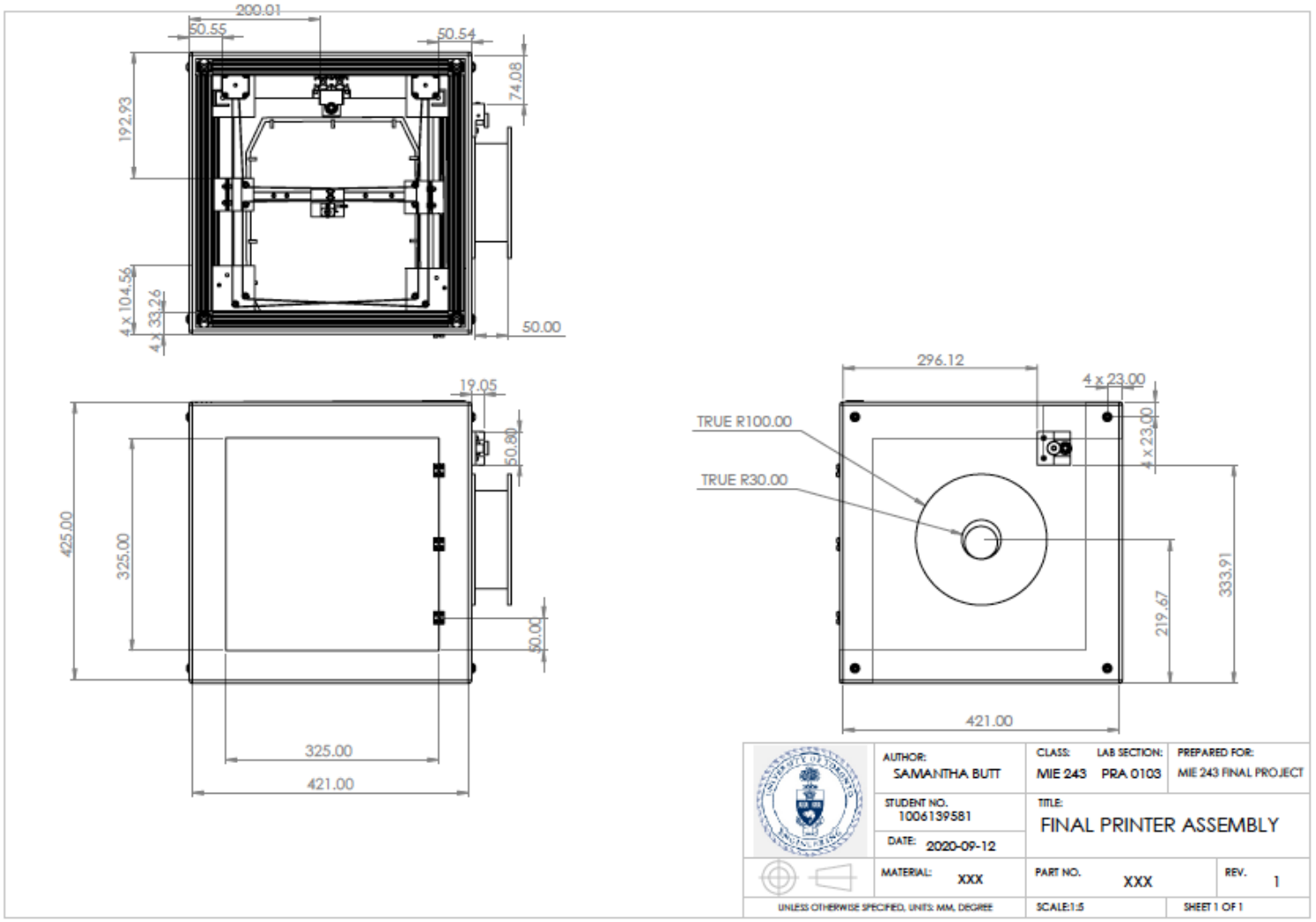

SOLIDWORKS Educational Product. For Instructional Use Only.

7.2 Sub-Assembly Drawings

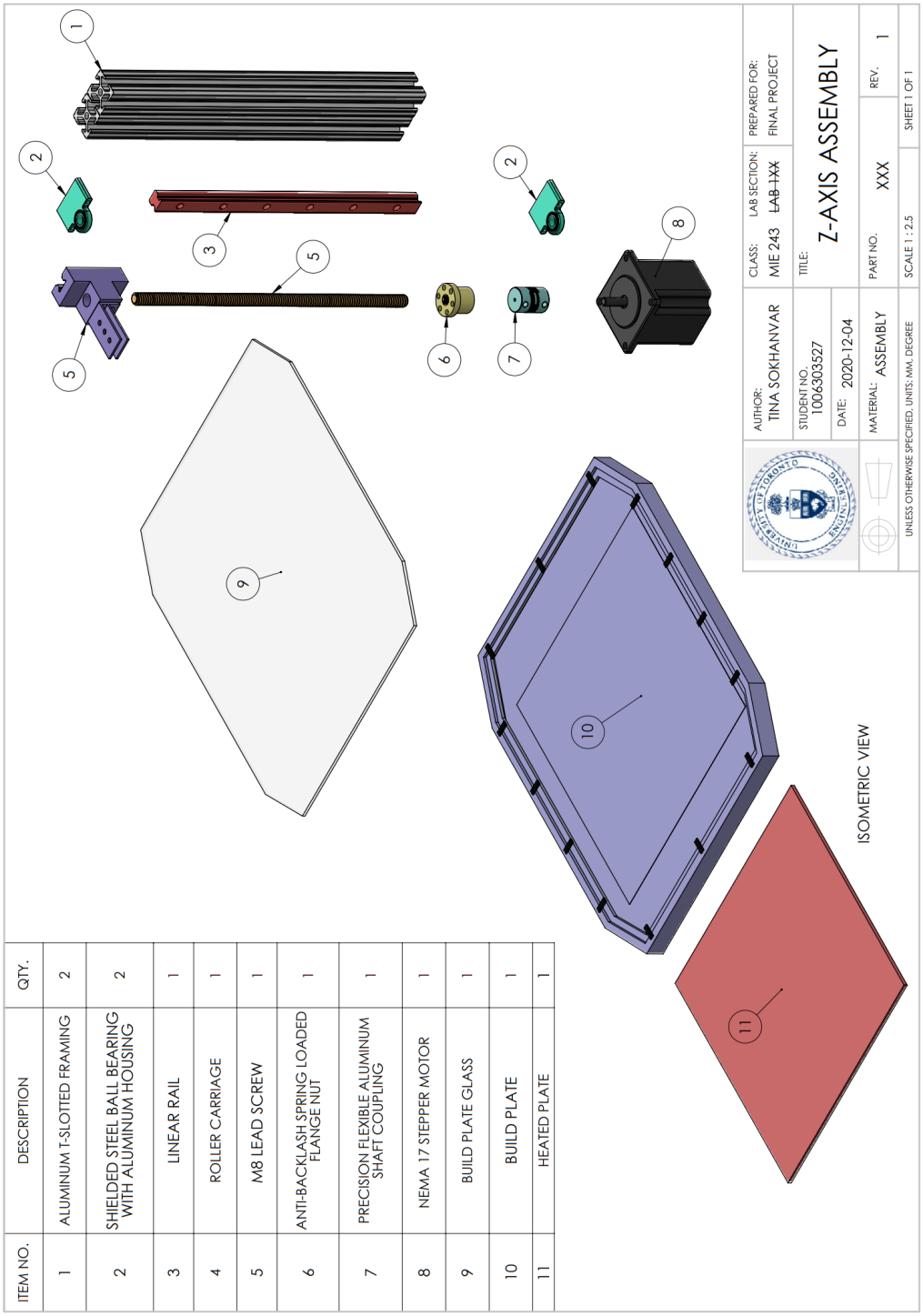

SOLIDWORKS Educational Product. For Instructional Use Only.

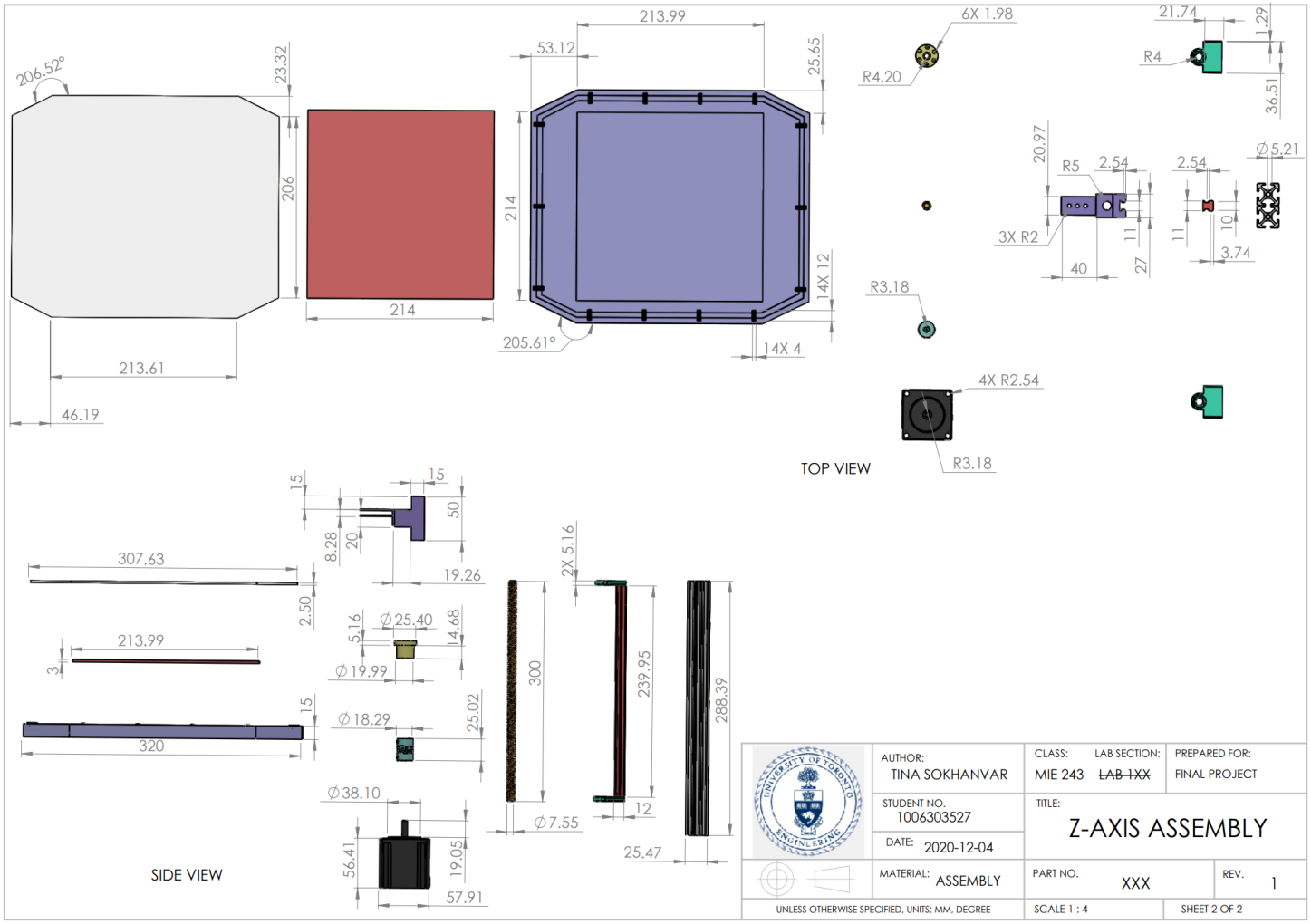

	AUTHOR: TINA SOKHANVAR	CLASS: MIE 243 LAB SECTION: ~~LAB 1XX~~	PREPARED FOR: FINAL PROJECT
	STUDENT NO. 1006303527	TITLE: Z-AXIS ASSEMBLY	
	DATE: 2020-12-04		
	MATERIAL: ASSEMBLY	PART NO. XXX	REV. 1
UNLESS OTHERWISE SPECIFIED, UNITS: MM, DEGREE		SCALE 1 : 4	SHEET 2 OF 2

SOLIDWORKS Educational Product. For Instructional Use Only.

ITEM NO.	DESCRIPTION	QTY.
1	ALUMINUM T-SLOTTED FRAME - VERTICAL	4
2	ALUMINUM T-SLOTTED FRAME	12
3	T-SLOTTED FRAME SCREW	24

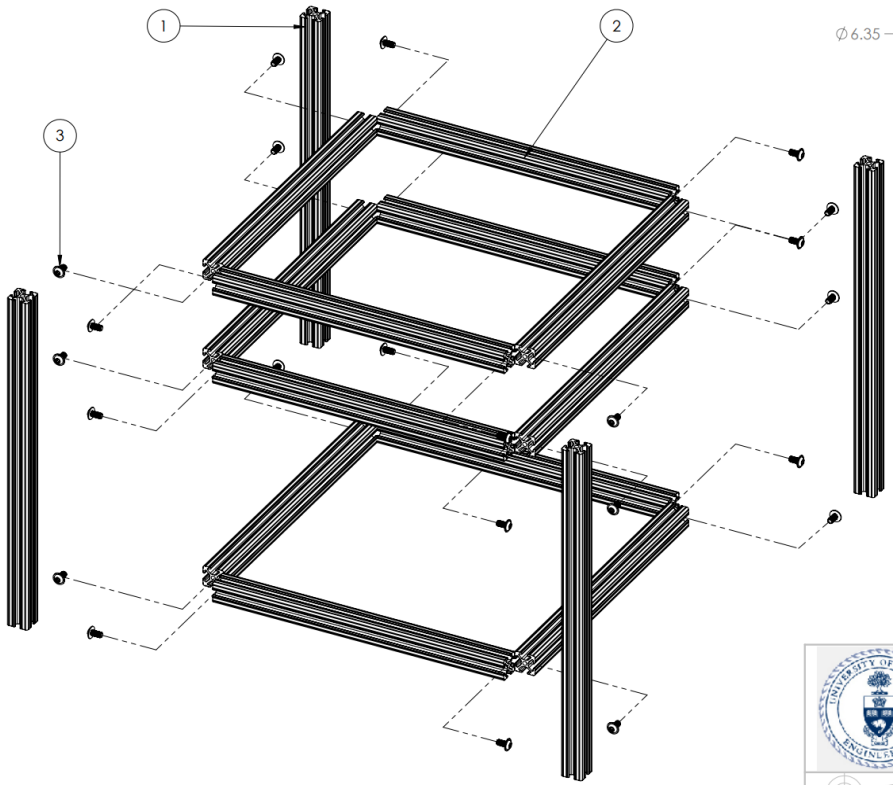

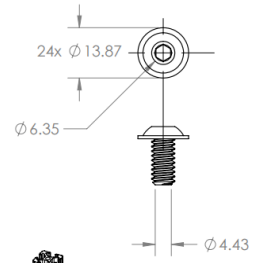

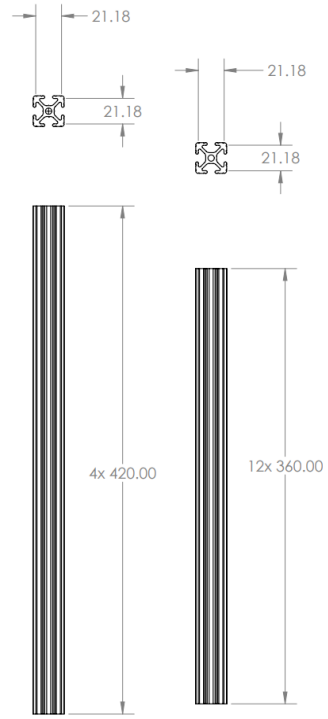

AUTHOR: ZEYNEP TIBIK	CLASS: MIE 243	LAB SECTION: ~~LAB 1XX~~	PREPARED FOR: FINAL PROJECT
STUDENT NO. 1006228413	TITLE: PRINTER FRAME ASSEMBLY		
DATE: 2020-12-08			
MATERIAL: ASSEMBLY	PART NO. XXX		REV. 1
UNLESS OTHERWISE SPECIFIED, UNITS: MM, DEGREE	SCALE 1:3		SHEET 1 OF 1

SOLIDWORKS Educational Product. For Instructional Use Only.

ITEM NO.	DESCRIPTION	QTY.
1	ALUMINUM T-SLOTTED FRAME	4
2	LINEAR RAIL	2
3	ROLLER CARRIAGE	2
4	ROLLER CARRIAGE - HORIZONTAL	2
5	LINEAR RAIL HORIZONTAL	1
6	MOTOR HOLDER SCREW ASSEMBLY	4
7	ENDER3 HOT END	1
8	ROLLER CARRIAGE HOLDER	1
9	BELT SYSTEM	1

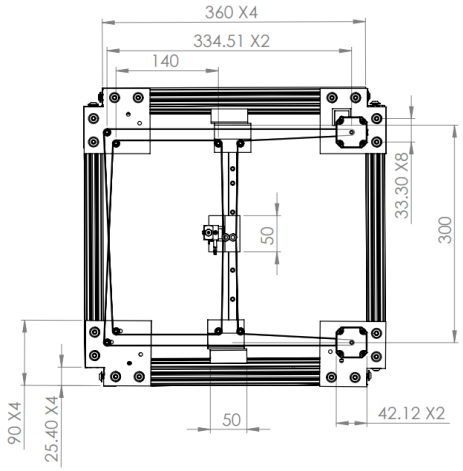

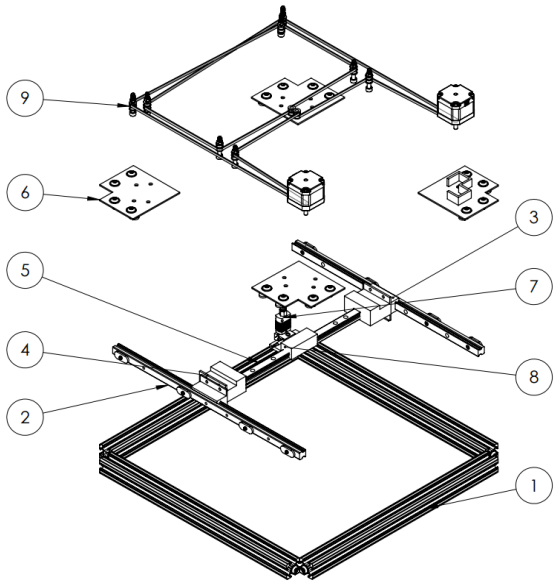

	AUTHOR: ZAINAB ALI	CLASS: MIE 243 LAB SECTION: ~~LAB 1XX~~	PREPARED FOR: FINAL PROJECT
	STUDENT NO. 1005772745	TITLE: X-Y AXIS ASSEMBLY	
	DATE: 2020-12-08		
	MATERIAL: ASSEMBLY	PART NO. XXX	REV. 1
UNLESS OTHERWISE SPECIFIED, UNITS: MM, DEGREE		SCALE:1:5	SHEET 1 OF 1

SOLIDWORKS Educational Product. For Instructional Use Only.

ITEM NO.	DESCRIPTION	QTY.
1	Casing Assembly	1
2	Bowden Assembly	1

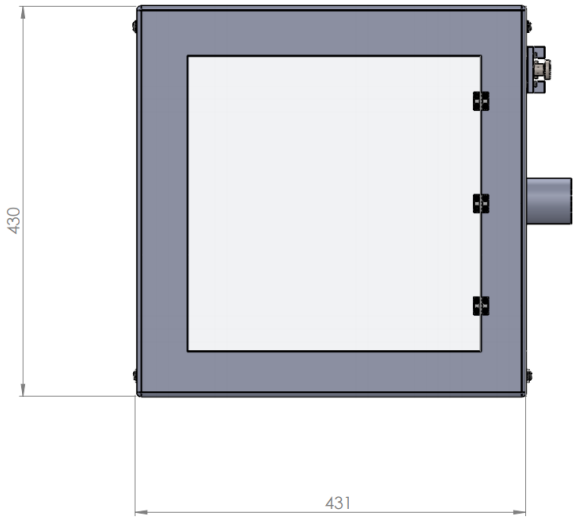

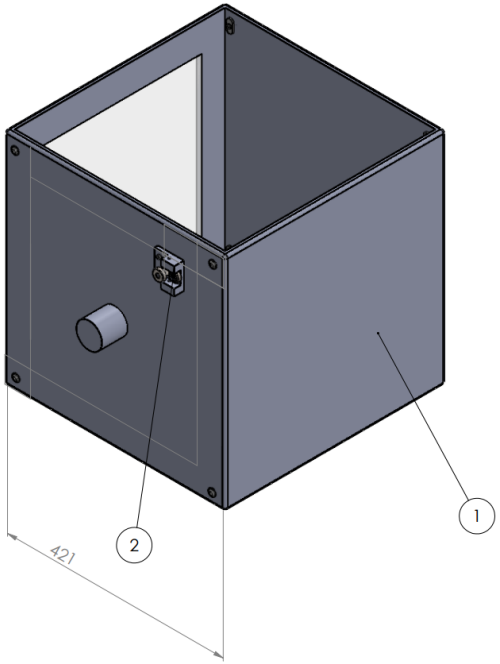

AUTHOR: SARAH KHAN	CLASS: MIE 243	LAB SECTION: PRA 0104	PREPARED FOR: DRAWING PURPOSE
STUDENT NO. 1005886365	TITLE: HOUSING ASSEMBLY		
DATE: 2020-12-09			
MATERIAL: MATERIAL	PART NO. XXX		REV. 1
UNLESS OTHERWISE SPECIFIED, UNITS: MM, DEGREE	SCALE:1:10		SHEET 1 OF 1

SOLIDWORKS Educational Product. For Instructional Use Only.

8.0 References

[1] "What Is CNC Machining? An Overview of the CNC Machining Process." Astro Machine Works. https://astromachineworks.com/what-is-cnc-machining/ (accessed Nov. 23, 2020)

[2] "The Complete Engineering Guide: 3d Printing." 3D Hubs. https://www.3dhubs.com/guides/3d-printing/#basics (accessed Nov. 23, 2020)

[3] "Guide to Selective Laser Sintering (SLS) 3D Printing." formlabs. https://formlabs.com/blog/what-is-selective-laser-sintering/#:~:text=Selective%20laser%20sintering%20(SLS)%20is,in%20product%20development%20for%20decades (accessed Nov. 23, 2020)

[4] F. Grieser. "FDM vs SLA: The Differences – Simply Explained." All3DP. https://all3dp.com/fdm-vs-sla/ (accessed Nov. 23, 2020)

[5] M. Latouche. "SLA 3D printing materials compared." 3DHubs. https://www.3dhubs.com/knowledge-base/sla-3d-printing-materials-compared/ (accessed Nov. 23, 2020)

[6] A. Richter. "How To: Print, Clean, and Post-Process SLA 3D Prints." MatterHackers. https://www.matterhackers.com/articles/how-to-print-clean-and-post-process-sla-3d-prints (accessed Nov. 23, 2020)

[7] M. Griffin. "SLA 3D Printing: Is 3D Printer Resin Toxic?." All3DP. https://all3dp.com/2/sla-3d-printing-is-3d-printer-resin-toxic/#:~:text=Resins%20also%20naturally%20give%20off,specifically%20marked%20as%20non%2Dtoxic (accessed Nov. 23, 2020)

[8] C. Armstrong. "Post processing for FDM printed parts." 3DHubs. https://www.3dhubs.com/knowledge-base/post-processing-fdm-printed-parts/ (accessed Nov. 23, 2020)

[9] H. Kondo. "SLA vs FDM: Is Resin 3D Printing Faster?." All3DP. https://all3dp.com/2/sla-vs-fdm-is-resin-3d-printing-faster/ (accessed Nov. 23, 2020)

[10] A.B. Varotsis. "Introduction to FDM 3D printing." 3DHubs. https://www.3dhubs.com/knowledge-base/introduction-fdm-3d-printing/#characteristics (accessed Nov. 16, 2020)

[11] "How Much Does a 3D Printer Cost? Calculate the ROI Now." formlabs. https://formlabs.com/blog/how-to-calculate-3d-printer-cost/ (accessed Nov. 16, 2020)

[12] P. Verma. "What is an FDM printer and how does it work?." Medical Design & Outsourcing. https://www.medicaldesignandoutsourcing.com/what-is-an-fdm-printer-and-how-does

-it-work/#:~:text=How%20does%20an%20FDM%20printer%20work%3F&text=Slicing%20software%20divides%20the%20digital,to%20form%20the%203D%20object (accessed Nov. 26, 2020)

[13] J. O'Connell. "FDM 3D Printers Explained: Cartesian, Delta, CoreXY, & More." All3DP. https://all3dp.com/2/cartesian-3d-printer-delta-scara-belt-corexy-polar/ (accessed Nov. 26, 2020)

[14] "Stereolithography / SLA 3D Printing – Simply Explained." All3DP. https://all3dp.com/2/stereolithography-3d-printing-simply-explained/ (accessed Nov. 26, 2020)

[15] L. Carolo. "3D Printer Nozzle Guide: What to Know and which to buy" https://all3dp.com/2/3d-printer-nozzle-size-material-what-to-know-which-to-buy/ (accessed Nov. 26, 2020)

[16] "How to Choose Between Cartesian and Delta 3D Printers." Fargo 3D Printing. https://www.fargo3dprinting.com/choose-cartesian-delta-3d-printers/#:~:text=As%20the%20speed%20of%20the,is%20the%20Bowden%20style%20extrusion (accessed Nov. 26, 2020)

[17] "Form 3L." formlabs. https://formlabs.com/3d-printers/form-3l/ (accessed Nov. 26, 2020)

[18] "SLA vs. DLP: Guide to Resin 3D Printers." formlabs. https://formlabs.com/blog/resin-3d-printer-comparison-sla-vs-dlp/ (accessed Nov. 26, 2020)

[19] H. Kondo. "SLA Post-Processing: Best Ways to Clean Resin 3D Prints." https://all3dp.com/2/sla-post-processing-best-ways-to-clean-your-resin-3d-prints/ (accessed Nov. 26, 2020)

[21] B. Goldschmidt. "3D Printer Bed Adhesion: All You Need To Know." All3DP. https://all3dp.com/2/3d-printer-bed-adhesion-all-you-need-to-know/ (accessed Nov. 23, 2020)

[22] B. Goldschmidt. "How to choose the right build plate." All3DP. https://all3dp.com/2/3d-printer-bed-how-to-choose-the-right-build-plate/ (accessed Nov. 23, 2020)

[23] Engineering ToolBox, (2003). Coefficients of Linear Thermal Expansion. [online] Available at: https://www.engineeringtoolbox.com/linear-expansion-coefficients-d_95.html (accessed Nov. 23, 2020)

[24] M. Dwamena. “3D Print Bed Plate – Glass Vs Aluminum Vs Spring Steel.” 3D Printerly. https://3dprinterly.com/3d-print-bed-plate-glass-vs-aluminum-vs-spring-steel/#Aluminum

[25] “3D Printer Build Plate Guide.” 3DMaker Engineering. https://www.3dmakerengineering.com/blogs/3d-printing/3d-printer-build-plate-guide (accessed Nov. 23, 2020)

[26] Thomas Sanladerer. 3D printing guides: Everything about heated beds!. (Dec. 21, 2014). Accessed: Dec. 9, 2019. [Online Video]. Available: https://www.youtube.com/watch?v=eure74A9HNc

[27] J. L. Bouthillier. “Heat Beds in 3D Printing – Advantages and Equipment.” Boots Industries. http://bootsindustries.com/heat-bed-3d-printing/ (accessed Dec. 9, 2020)

[28] “What is a Polyimide Heater?.” Omega. https://www.omega.ca/en/resources/what-is-a-polyimide-heater (accessed Nov. 23, 2020)

[29] “Flexible Heaters.” Omega. https://www.omega.ca/en/resources/flexible-heaters?gclid=CjwKCAiAnvj9BRA4EiwAuUMDf_zPpjUdPCvHvvEVDemRqg9B_p_JMqYB2A9n8oQzFtpwEkUXN7KythoCJGMQAvD_BwE&gclsrc=aw.ds (accessed Nov. 23, 2020)

[30] T. Landry. “Extruders 101: A crash course on an essential component of your 3D printer.” MatterHackers. https://www.matterhackers.com/articles/extruders-101:-a-crash-course-on-an-essential-component-of-your-3d-printer (accessed Nov. 23, 2020)

[31] The 3D Print General. 3D Printing 102 - Extruders. (Nov. 1, 2019). Accessed: Dec 9, 2020. [Online Video]. Available: https://www.youtube.com/watch?v=64jnJdbeIjQ&t=427s

[32] T. Landry. “Extruders 101: A crash course on an essential component of your 3D printer.” MatterHackers. https://www.matterhackers.com/articles/extruders-101:-a-crash-course-on-an-essential-component-of-your-3d-printer (accessed Nov. 23, 2020)

[33] “Direct Drive and Bowden Extruder Assembly.” MANUFACTUR3D. https://manufactur3dmag.com/flexible-filament-the-road-to-3d-printing-success/dire

ct-drive-bowden-extruder-assembly/ (accessed Dec. 9, 2020)

[34] L. Carolo. "3D Printer Nozzle Guide: What to Know & Which to Buy." All 3DP. https://all3dp.com/2/3d-printer-nozzle-size-material-what-to-know-which-to-buy/ (accessed Nov. 30, 2020)

[35] "Stainless Steel 3D Printer Nozzles." MatterHackers. https://www.matterhackers.com/store/c/stainless-steel-3d-printer-nozzles (accessed Nov. 30, 2020)

[36] "UMMD Belt Lifted Z Axis Design, part 3." Mark Rehorst's Tech Topics.https://drmrehorst.blogspot.com/2017/07/ultra-megamax-dominator-z-axis-design_65.html (accessed Nov. 30, 2020)

[37] "X-Cube LCD based Resin SLA 3D Printer." ROBOTDIGG. https://www.robotdigg.com/product/1146/X-CUBE-LCD-based-Resin-SLA-3D-Printer (accessed Nov. 30, 2020)

[38] "Sapphire Pro / S-Z-Wobble FIX -Anti- Z Wobble" MakerBit Thingverse. https://www.thingiverse.com/thing:4015882 (accessed Nov. 30, 2020)

[39] "T8 Spring Load Nut 2/4/8mm Lead Screw Anti-Backlash Anti Backlash for 3D Printer" Ebay. https://www.ebay.com/itm/T8-Spring-Load-Nut-2-4-8mm-Lead-Screw-Anti-Backlash-Anti-Backlash-for-3D-Printer-/174239676300 (accessed Nov. 30, 2020)

[40] The First Layer. Linear Rails are they better than smooth rods?. (Oct. 15, 2018). Accessed: Dec. 9, 2019. [Online Video]. Available: https://www.youtube.com/watch?v=sq_pG5EbtXQ

[41] H. Kondo. "Linear Rail 3D Printer: Really Better or Just a Hype?." All3DP. https://all3dp.com/2/linear-rail-3d-printer-really-better-or-just-a-hype/ (accessed Nov. 30, 2020)

[42] M.Mackay. (2020) Lecture Slides 11- Power Sources https://q.utoronto.ca/courses/171100/pages/lecture-materials (accessed Dec 2, 2020)

[43] M.Mackay. (2020) Lecture Slides 9- Belt and Chain Drives https://q.utoronto.ca/courses/171100/pages/lecture-materials (accessed Dec 2, 2020)

[44] M.Mackay. (2020) Lecture Slides 5- Motion and Motion support transmission

https://q.utoronto.ca/courses/171100/pages/lecture-materials (accessed Dec 2, 2020)

[45] "3D Printing Materials." 3DHubs. https://www.3dhubs.com/guides/3d-printing/#3d-printing-materials (accessed Nov. 30, 2020)

[46] "How Much Does a 3D Printer Cost? Calculate the ROI Now." formlabs. https://formlabs.com/blog/how-to-calculate-3d-printer-cost/ (accessed Nov. 30, 2020)

[47] J. Flynt. "What is a Delta 3D Printer? Pros, Cons, and Best Brands." 3D Insider. https://3dinsider.com/what-is-a-delta-3d-printer/ (accessed Nov. 30, 2020)

[48] K. Stevenson. "Are CoreXY 3D Printers Taking Over?." Fabbaloo. https://www.fabbaloo.com/blog/2020/3/9/are-corexy-3d-printers-taking-over (accessed Nov. 30, 2020)

[49] E. Grames. "CoreXY 3D Printer: Why It Makes a Difference." https://m.all3dp.com/2/corexy-3d-printer-is-it-worth-buying/ (accessed Nov. 30, 2020)

[50] "Bondtech BMG Extruder - 1.75mm." MatterHackers. https://www.matterhackers.com/store/l/bondtech-bmg-extruder/sk/M88WAUL2 (accessed Nov. 30, 2020)

[51] "Nema 17 Bipolar 45Ncm (64oz.in) 2A 42x42x40mm 4 Wires w/ 1m Cable & Connector." Stepper Online. https://www.omc-stepperonline.com/nema-17-bipolar-45ncm-64oz-in-2a-42x42x40mm-4-wires-w-1m-cable-and-connector.html (accessed Nov. 30, 2020)

[52] "Timing Belt Advantages & Disadvantages." Pfeifer Industries. https://www.pfeiferindustries.com/timing-belt-advantages-and-disadvantages (accessed Nov. 30, 2020)

[53] M. Dwamena. "3D Printer Filament 1.75mm vs 3mm – All You Need To Know." 3D Printerly. https://3dprinterly.com/3d-printer-filament-1-75mm-vs-3mm-all-you-need-to-know/ (accessed Dec. 2, 2020)

[54] "A Guide To The Plastics used for electronic enclosures" OKW Enclosures, Inc. https://www.okwenclosures.com/en/technical_data/enclosures_plastics_guide.html (accessed Dec. 9, 2020).

[55] "SainSmart TPU - Pink - 1.75mm." Filaments.ca. https://filaments.ca/collections/3d-filaments/products/sainsmart-tpu-pink-1-75mm?variant=32617986326613 (accessed Dec. 2, 2020)

[56] "EconoFil™ 1KG PETG Filament - Grey - 1.75mm." Filaments.ca. https://filaments.ca/collections/3d-filaments/products/econofil-1kg-petg-filament-grey-1-75mm?variant=8395747622965 (accessed Dec. 2, 2020)

[57] "The Original Carbon Fiber Composite PLA - 1.75mm." Filaments.ca. https://filaments.ca/collections/3d-filaments/products/the-original-carbon-fiber-composite-pla-1-75mm?variant=32845415710805 (accessed Dec. 9, 2020).

[58] I.Moyer "Principle of Operation". CoreXY. http://www.corexy.com/theory.html (accessed Dec. 9, 2020).

[59] "Timing Belt Actuator". Vention. https://vention.io/docs/datasheets/timing-belt-linear-actuator-datasheet-10 (accessed Dec. 9, 2020).

[60] Vector 3D. Core XY explained with two blank pieces of paper. (Aug 19, 2017) Accessed: Dec. 9, 2020. [Online Video] https://www.youtube.com/watch?v=7jMiMZ3TOqM&ab_channel=Vector3D

[61] M. Mensely. "3D Printer Extruder: The Ultimate Guide" https://all3dp.com/1/3d-printer-extruder-nozzle-guide/ (accessed Dec. 9, 2020).

[62] C. Pischke. "Everything you need to know about nozzles for 3D Printing". https://www.printyourmind3d.ca/blogs/articles/everything-you-need-to-know-about-nozzles-for-3d-printing (accessed Dec. 9, 2020).

[63] "Original Prusa i3 MK3S+ kit". Prusa Research. https://shop.prusa3d.com/en/3d-printers/180-original-prusa-i3-mk3s-kit.html?gclid=Cj0KCQiA5bz-BRD-ARIsABjT4nh8Rg1Ih0_OVm44q47EbFliPdTXCdTNb1GozabRRs5iEsoguxwuDp4aApB-EALw_wcB (accessed Dec. 9, 2020).

[64] "Set Screw Precision Flexible Shaft Coupling." McMaster-Carr. https://www.mcmaster.com/9861T111/ (accessed Nov. 20, 2020).

[65] "Flange Nut with M8 x 2.50 mm Thread for Fast-Travel Ultra-Precision Lead Screw." McMaster-Carr. https://www.mcmaster.com/2391N11/ (accessed Nov. 20, 2020).

[66] "Low-Profile Mounted Shielded Steel Ball Bearing." McMaster-Carr. https://www.mcmaster.com/8600n13 (accessed Nov. 20, 2020).

[67] "T-Slotted Framing." McMaster-Carr. https://www.mcmaster.com/47065T101/ (accessed Nov. 15, 2020).

[68] "Position-Control DC Motor." McMaster-Carr. https://www.mcmaster.com/6627T53/ (accessed Nov. 17, 2020).

[69] "Position-Control DC Motor." McMaster-Carr. https://www.mcmaster.com/6627T66/ (accessed Nov. 17, 2020).

[70] "T-Slotted Framing." McMaster-Carr. https://www.mcmaster.com/47065T103/ (accessed Nov. 15, 2020).

[71] "T-Slotted Framing." McMaster-Carr. https://www.mcmaster.com/47065T142/ (accessed Nov. 15, 2020).

[72] "Black-Oxide Alloy Steel Socket Head Screw." McMaster-Carr. https://www.mcmaster.com/91290A304/ (accessed Nov. 17, 2020).

[73] A. C. Aviles. "Ender 3 Hot End." GrabCAD. https://grabcad.com/library/ender-3-hot-end-1 (accessed Nov. 17, 2020).

[74] "12 mm Wide Guide Rail for Roller Bearing Carriage." McMaster-Carr. https://www.mcmaster.com/9215T81/ (accessed Nov. 17, 2020).

[75] "Steel Hex Nut." McMaster-Carr. https://www.mcmaster.com/90592A090/ (accessed Nov. 24, 2020).

[76] "Black-Oxide Alloy Steel Socket Head Screw." McMaster-Carr. https://www.mcmaster.com/91290A254/ (accessed Nov. 15, 2020).

[77] "Black-Oxide Alloy Steel Socket Head Screw." McMaster-Carr. https://www.mcmaster.com/91290A382/ (accessed Nov. 15, 2020).

[78] "Steel Hex Nut." McMaster-Carr. https://www.mcmaster.com/90592A104/ (accessed Nov. 15, 2020).

[79] "Surface-Mount Hinge with Holes." McMaster-Carr. https://www.mcmaster.com/1603A2/ (accessed Nov. 24, 2020).

[80] "Position-Control DC Motor." McMaster-Carr. https://www.mcmaster.com/6627T39/ (accessed Nov. 29, 2020).

[81] "MXL Series Timing Belt Pulley." McMaster-Carr. https://www.mcmaster.com/1375K11/ (accessed Nov. 29, 2020).