SECURITY CLASSN: UNCLASSIFIED

DRAWING No. Hydro-motherboard_09.scm

USED ON

3rd ANGLE PROJECTION

NOT TO SCALE

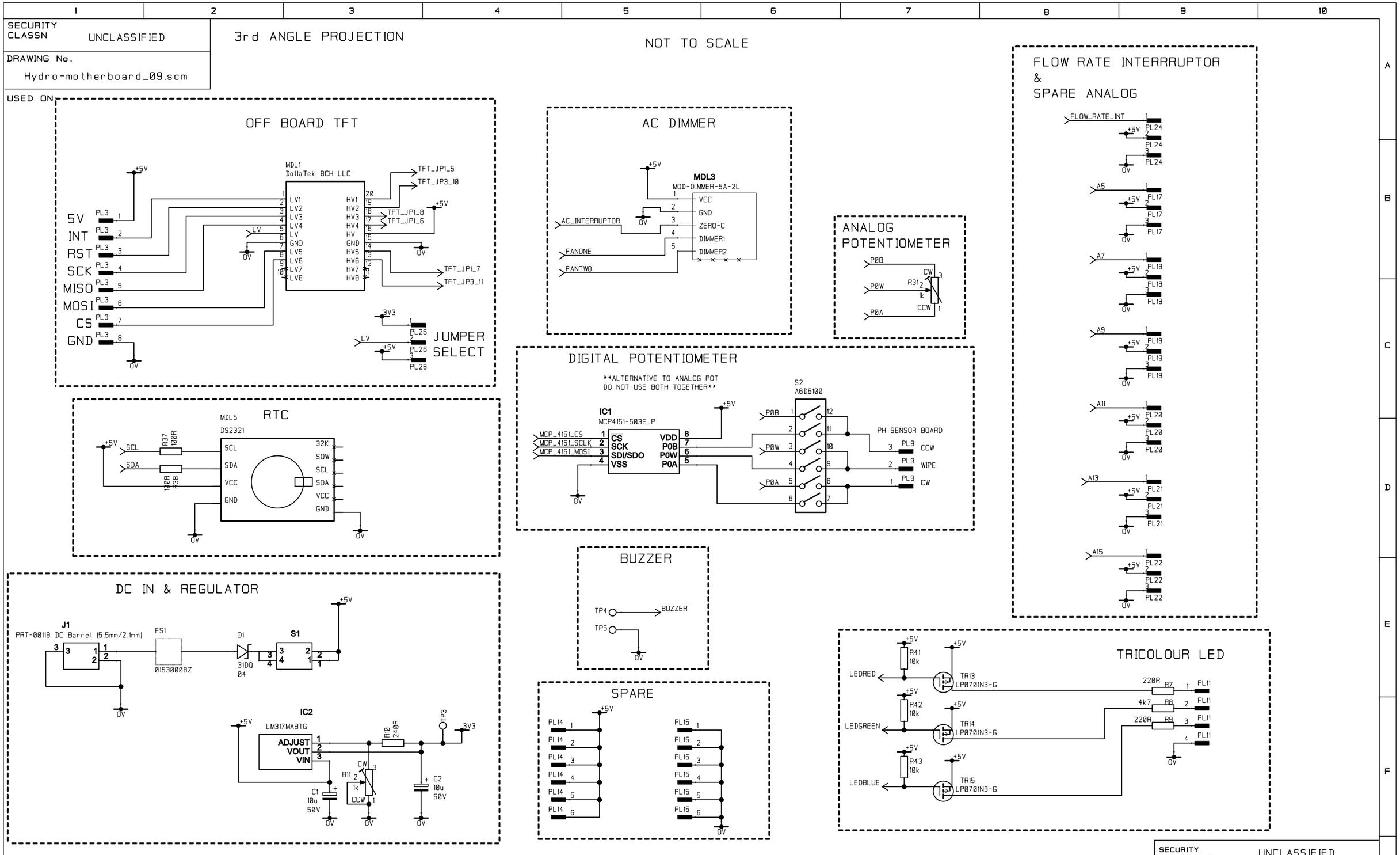

SECURITY CLASSIFICATION: UNCLASSIFIED

FILE LOCATION: W:\RELEASED\

MATERIAL	FINISH	DIMENSIONS mm TOLERANCES (UNLESS STATED)
SEE NOTES	SEE NOTES	+/- 0.1

ISSUE	4	5	6	7	8	9
ECN No						
DATE	30/07/20	21/09/20	20/10/20	28/10/20	28/11/20	21/03/22
DRAWN						
APPRVD						

©COPYRIGHT

TITLE: CIRCUIT DIAGRAM HYDRO MOTHERBOARD

DRAWING NUMBER: Hydro-motherboard_09.scm

A4

SECURITY CLASSN	UNCLASSIFIED
DRAWING No.	Hydro-motherboard_09.scm

3rd ANGLE PROJECTION

NOT TO SCALE

USED ON:

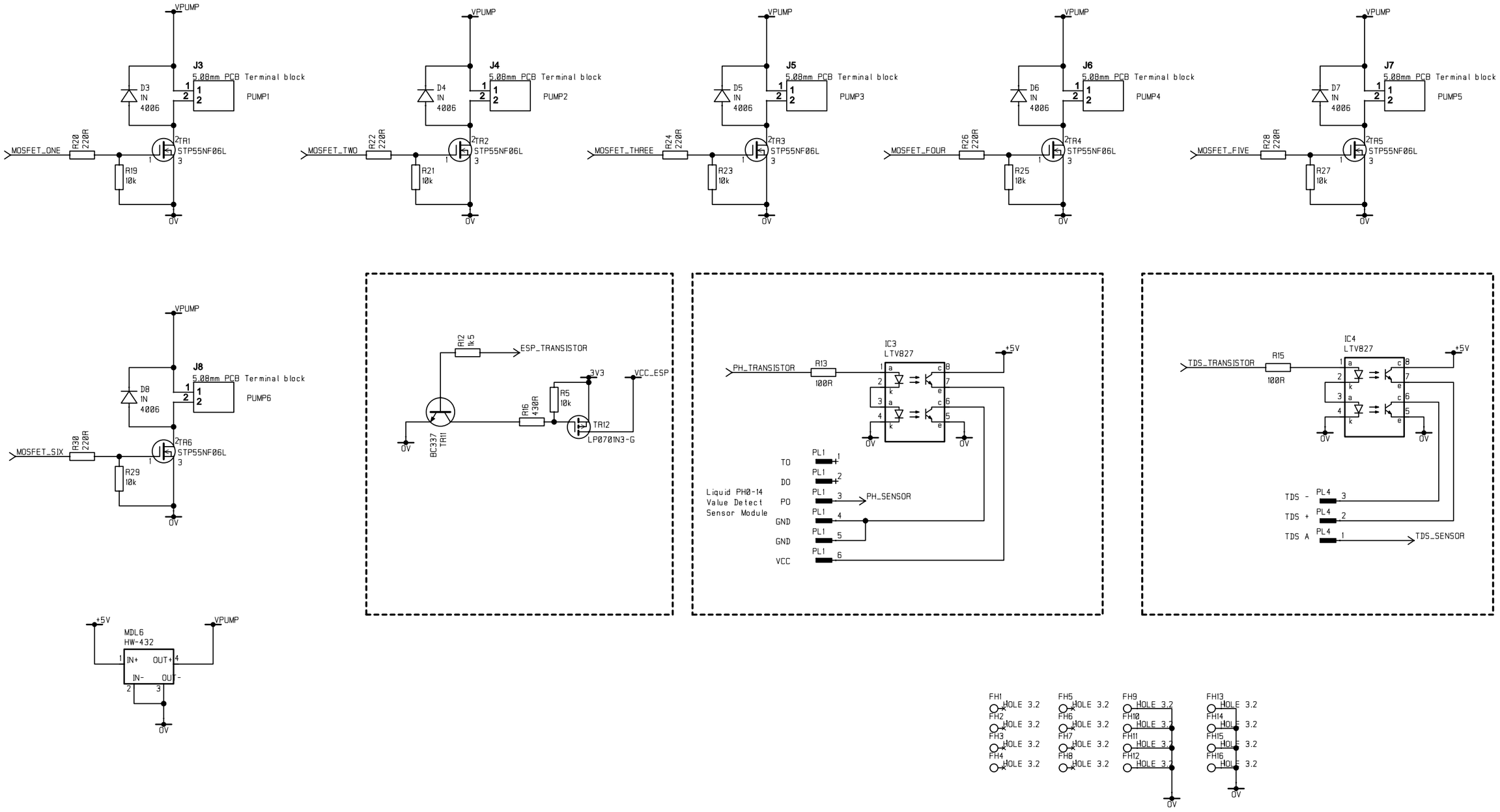

SECURITY CLASSIFICATION	UNCLASSIFIED

FILE LOCATION: W:\RELEASED\			ISSUE	4	5	6	7	8	9
MATERIAL	FINISH	DIMENSIONS mm TOLERANCES (UNLESS STATED)	ECN No						
SEE NOTES	SEE NOTES	+/- 0.1	DATE	30/07/20	21/09/20	20/10/20	28/10/20	28/11/20	21/03/22
			DRAWN						
			APPRVD						

©COPYRIGHT

TITLE
CIRCUIT DIAGRAM
HYDRO MOTHERBOARD

DRAWING NUMBER
Hydro-motherboard_09.scm

A4

SECURITY CLASSN	UNCLASSIFIED
DRAWING No.	Hydro-motherboard_09.scm

3rd ANGLE PROJECTION

NOT TO SCALE

USED ON:

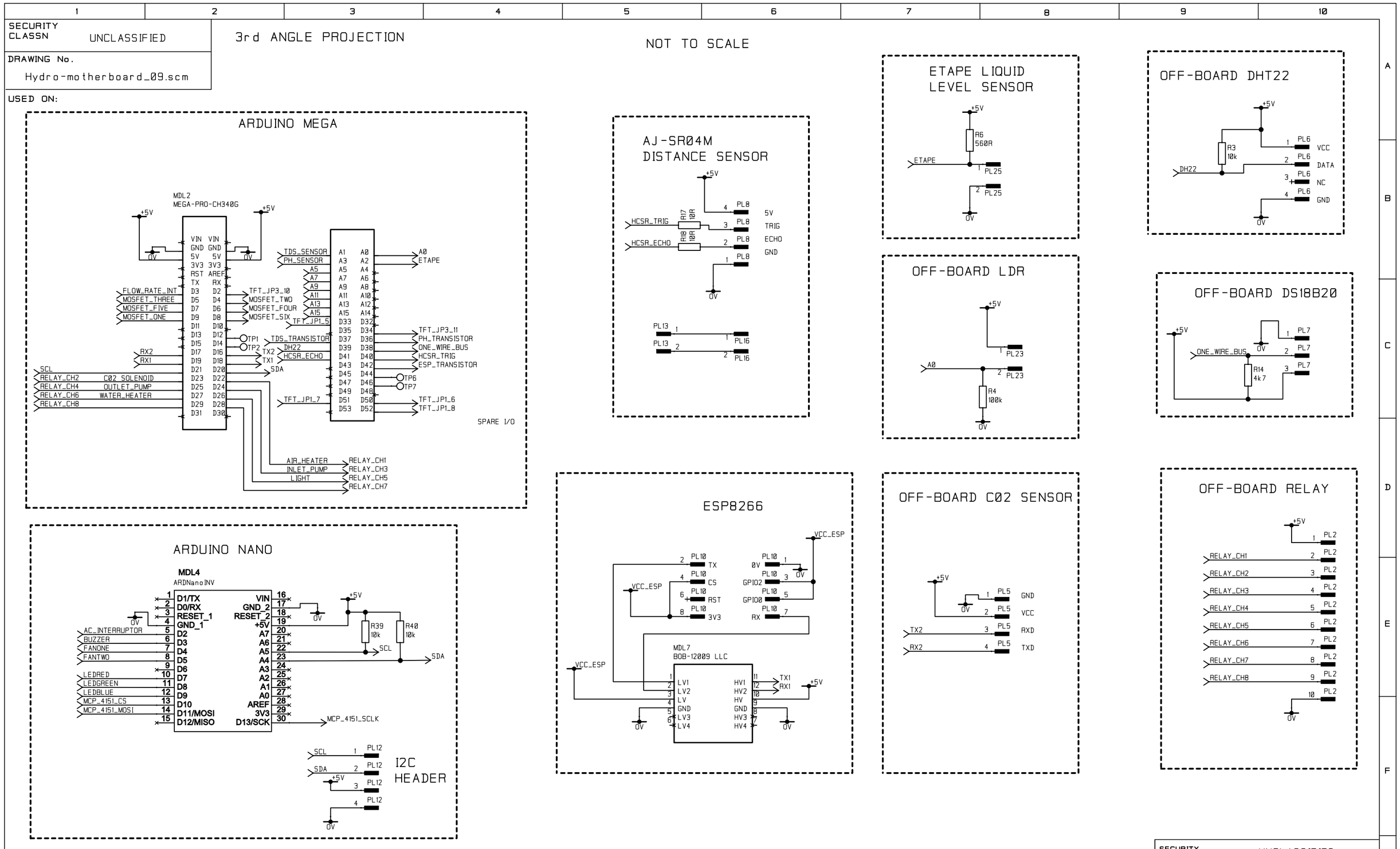

SECURITY CLASSIFICATION	UNCLASSIFIED

FILE LOCATION: W:\RELEASED\			ISSUE	4	5	6	7	8	9
MATERIAL	FINISH	DIMENSIONS mm TOLERANCES (UNLESS STATED)	ECN No						
SEE NOTES	SEE NOTES	+/- 0.1	DATE	30/07/20	21/09/20	20/10/20	28/10/20	28/11/20	21/03/22
			DRAWN						
			APPRVD						

©COPYRIGHT

TITLE
CIRCUIT DIAGRAM
HYDRO MOTHERBOARD

DRAWING NUMBER
Hydro-motherboard_09.scm

A4