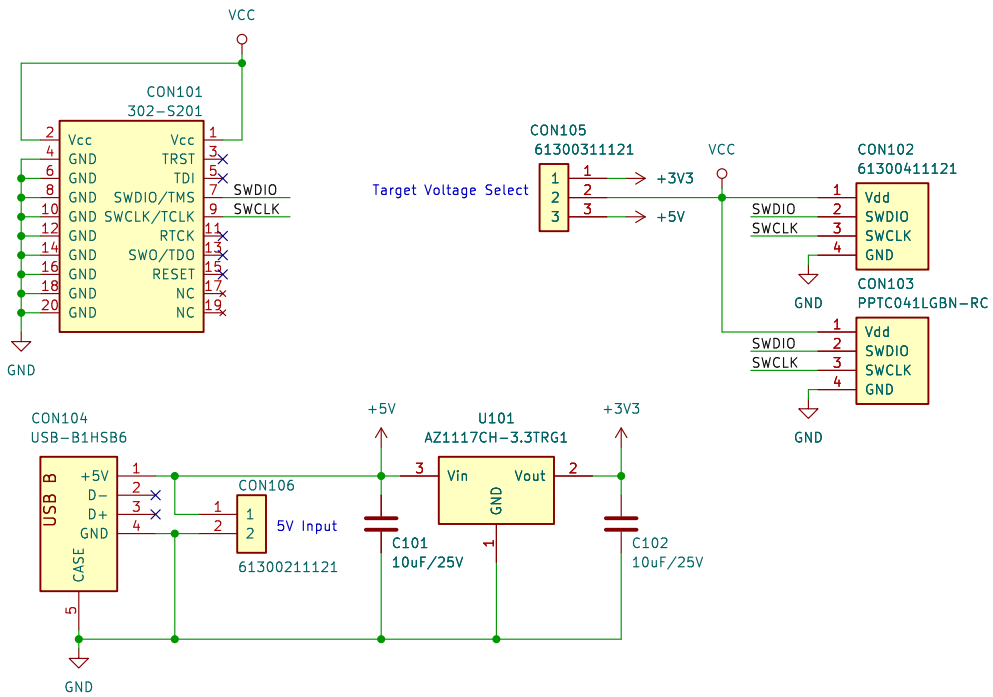

logo101 db-logo

logo102 oshw-logo

Copyright 2024 René Richard
Licensed Under CERN OHL v.1.2
https://github.com/db-electronics/petit-jtag-kicad

db Electronics

Sheet: /
File: petit-swd.kicad_sch

Title: Petit SWD

Size: A	Date: 2024-04-09	**Rev: 1.0**
KiCad E.D.A. kicad 7.0.8		Id: 1/1