EQUIPMENT	30-HE-1110	30-HE-1130	80-HE-3120	30-HE-1250
DESCRIPTION	INLET HEATER 1 x 100%	INTERSTAGE HEATER 1 x 100%	EXPORT GAS HEATER 1 x 100%	FINAL STAGE HEATER 1 x 100%

NOTES:

1. INTERSTAGE HEATERS AND FINAL STAGE HEATERS ARE CURRENTLY OFFLINE. 03

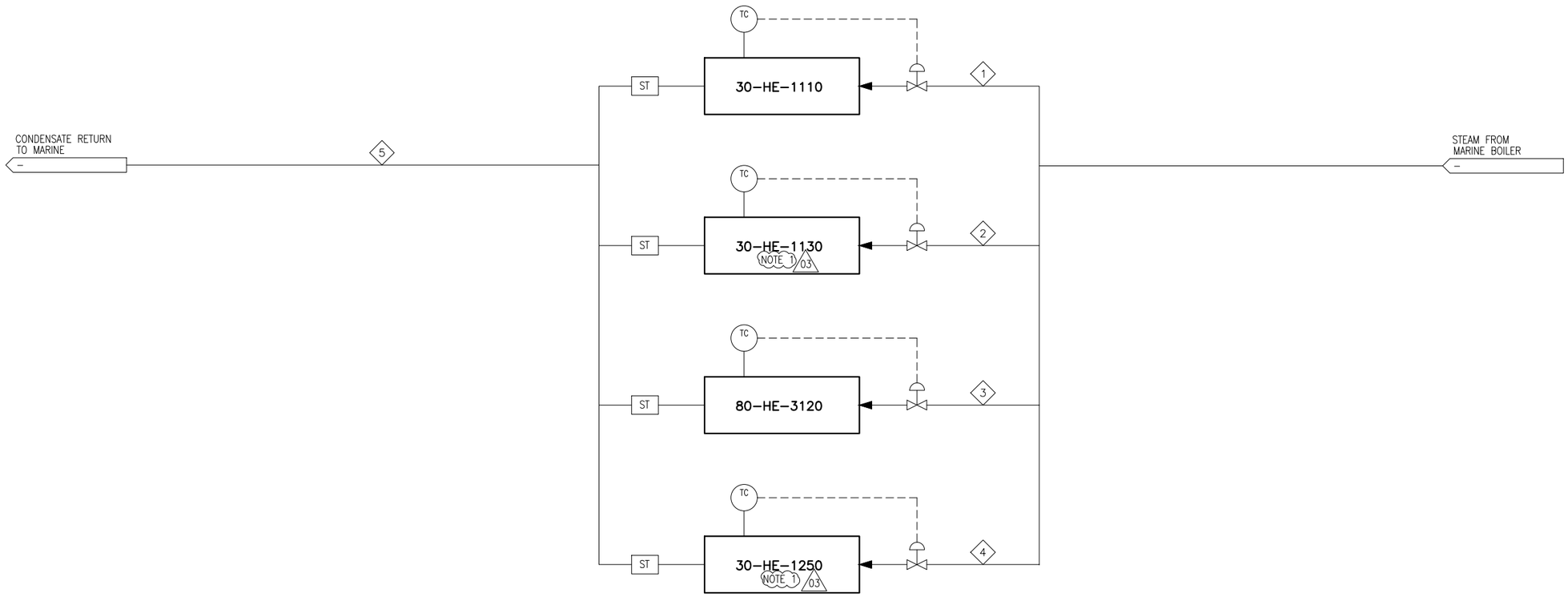

STREAM No.	UNITS	1		2		3		4		5	
STREAM NAME		HEATING MEDIUM TO INLET HEATER		HEATING MEDIUM TO INTERSTAGE HEATER		HEATING MEDIUM TO EXPORT GAS HEATER		HEATING MEDIUM TO FINAL STAGE HEATER		HEATING MEDIUM RETURN	
	CASE	MAX. STEAM CASE 10A	MIN. STEAM CASE 5C (NO EXPORT GAS)	MAX. STEAM CASE 10A	MIN. STEAM CASE 5C (NO EXPORT GAS)	MAX. STEAM CASE 10A	MIN. STEAM CASE 5C (NO EXPORT GAS)	MAX. STEAM CASE 10A	MIN. STEAM CASE 5C (NO EXPORT GAS)	MAX. STEAM CASE 10A	MIN. STEAM CASE 5C (NO EXPORT GAS)
FLOW	kg/hr	3226	2902	NOTE 1	NOTE 1	324	0	NOTE 1	NOTE 1	3550	2902
PRESSURE	barg	9	9	9	9	9	9	9	9	3	3 03
TEMPERATURE	°C	180	180	180	180	180	180	180	180	120	120
DENSITY @ TP.	kg/m^3	5.2	5.2	5.2	5.2	5.2	5.2	5.2	5.2	943	943

REV.	DATE	DESCRIPTION	PREP.	CHK.	ENGR.	APPR.
03	04.11.20	AS-BUILT (CHANGE ORDER II HP COMPRESSORS RESTAGING)	Rzh	NBP	JLL	SS
02	03.01.12	AS-BUILT	Rzh	OBL	HWL	AJ
01	-	NOT ISSUED	-	-	-	-
00	25.10.10	APPROVED FOR CONSTRUCTION	TOP	FJ	HWL	AJ
B3	07.06.10	RE-APPROVED FOR DESIGN (UPLIFT FOR 55 kbopd)	TOP	FJ	HWL	AJ
B2	03.05.10	RE-APPROVED FOR DESIGN (UPLIFT FOR 55 kbopd)	TOP	FJ	HWL	AJ
B1	-	NOT ISSUED	-	-	-	-
B0	20.01.10	APPROVED FOR DESIGN	TOP	FJ	HWL	AJ
A1	24.11.09	ISSUED FOR REVIEW	Rzh	FJ	HWL	AJ

CLIENT: HOANG · LONG JOINT OPERATING COMPANY

PROJECT NAME: TGT FIELD DEV.

COMPANY DOC. IDENTIFICATION: -

JOB NO: -

CONTRACTOR: BUMIARMADA, VIETSOVPETRO

CONTRACTOR DOC. IDENTIFICATION: -

JOB NO: -

CONSULTANTS: BUMIARMADA ENGINEERING, Oiltech Engineering

VENDOR DOC. IDENTIFICATION: BAE-70000-PR-DW-0114

JOB NO: BAB 002 1006

FACILITY NAME: FPSO

LOCATION: VIETNAM

SCALE: N.T.S.

SHEET NO: 1 OF 1

PAPER SIZE: A1

DOCUMENT TITLE: UTILITY FLOW DIAGRAM HEATING MEDIUM SYSTEM

SUPERSEDED N

SUPERSEDED BY N

PLANT AREA:

PLANT UNIT: