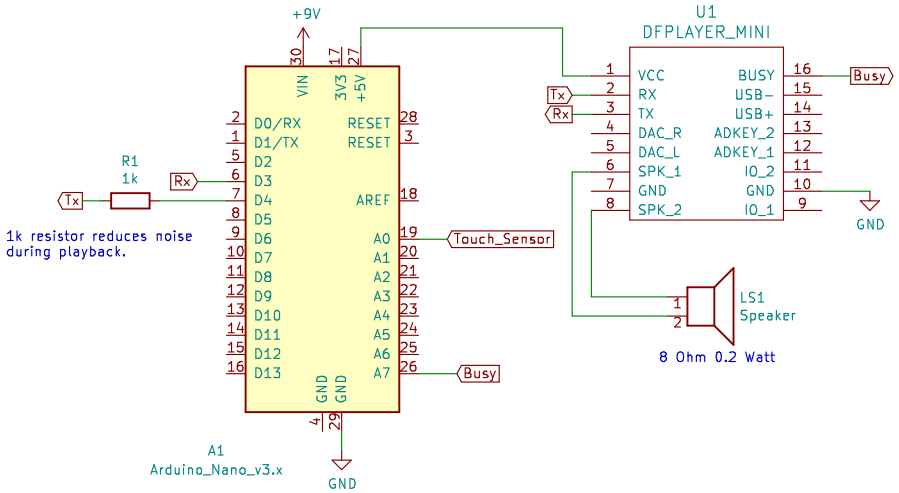


Touch sensor is a wire helix embedded inside the 3D printed outer shell.

Sheet: /
File: touch_toy.sch

**Title:** Musical Touch Toy

| | | |
|---|---|---|
| Size: A4 | Date: 2019 - 01 - 07 | Rev: 1.0 |
| KiCad E.D.A. kicad 6.0.0-rc1-unknown-3f9230f66ubuntu16.04.1 | | Id: 1/1 |