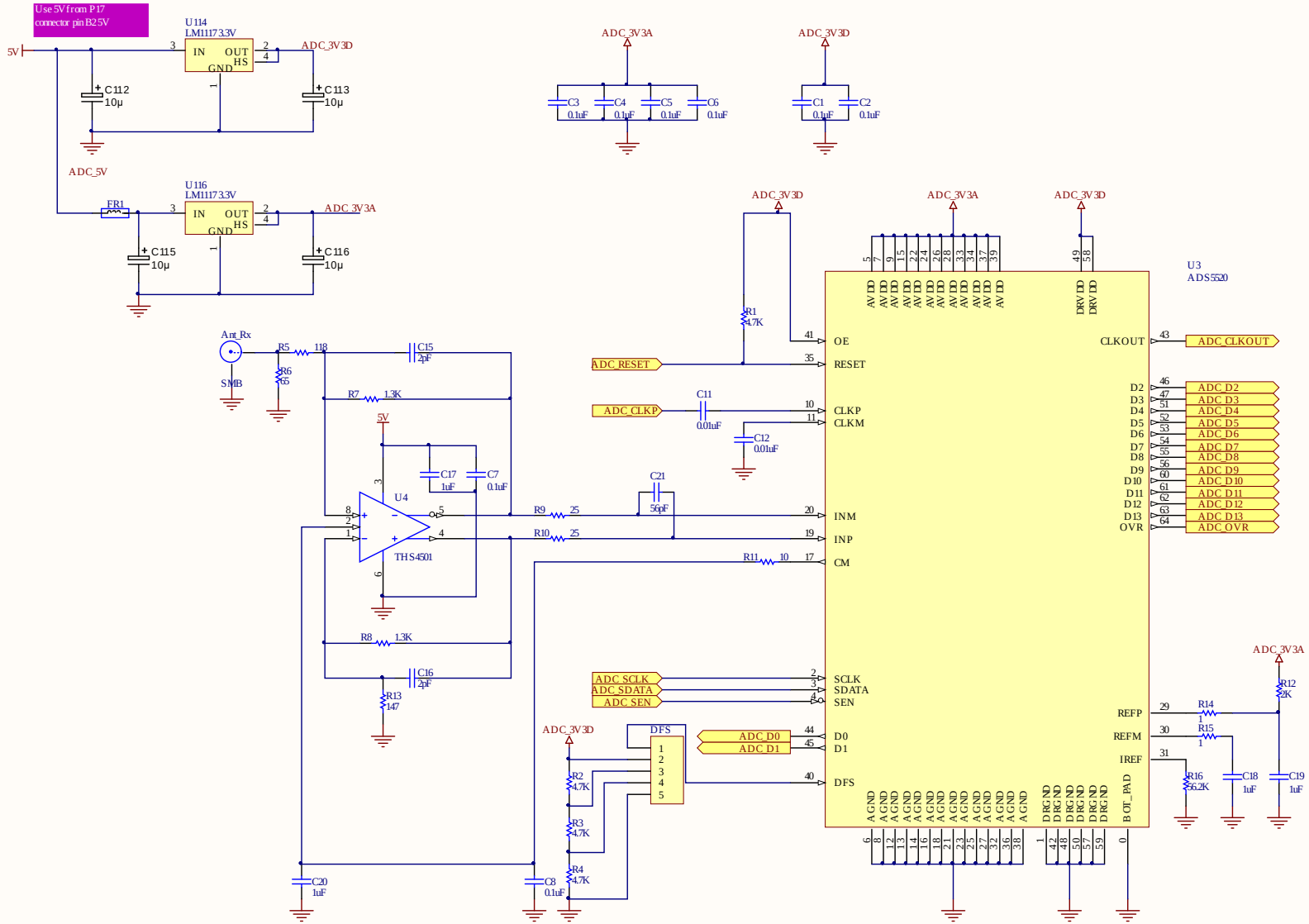

DFS-PIN VOLTAGE (VDFS) SELECT DATAFORMAT
VDFS<AVDD/6 => Straight Binary Data valid on rising edge
AVDD/3<VDFS<AVDD/2 => 2's complement Data valid on rising edge
AVDD/2<VDFS<2*AVDD/3 => Straight Binary Data valid on falling edge
VDFS>5*AVDD/6 => 2's complement Data valid on falling edge

Title		
Size A3	Number	Revision
Date: 07/04/2018		Sheet of
File: C:\Users\..\adc.schdoc		Drawn By: