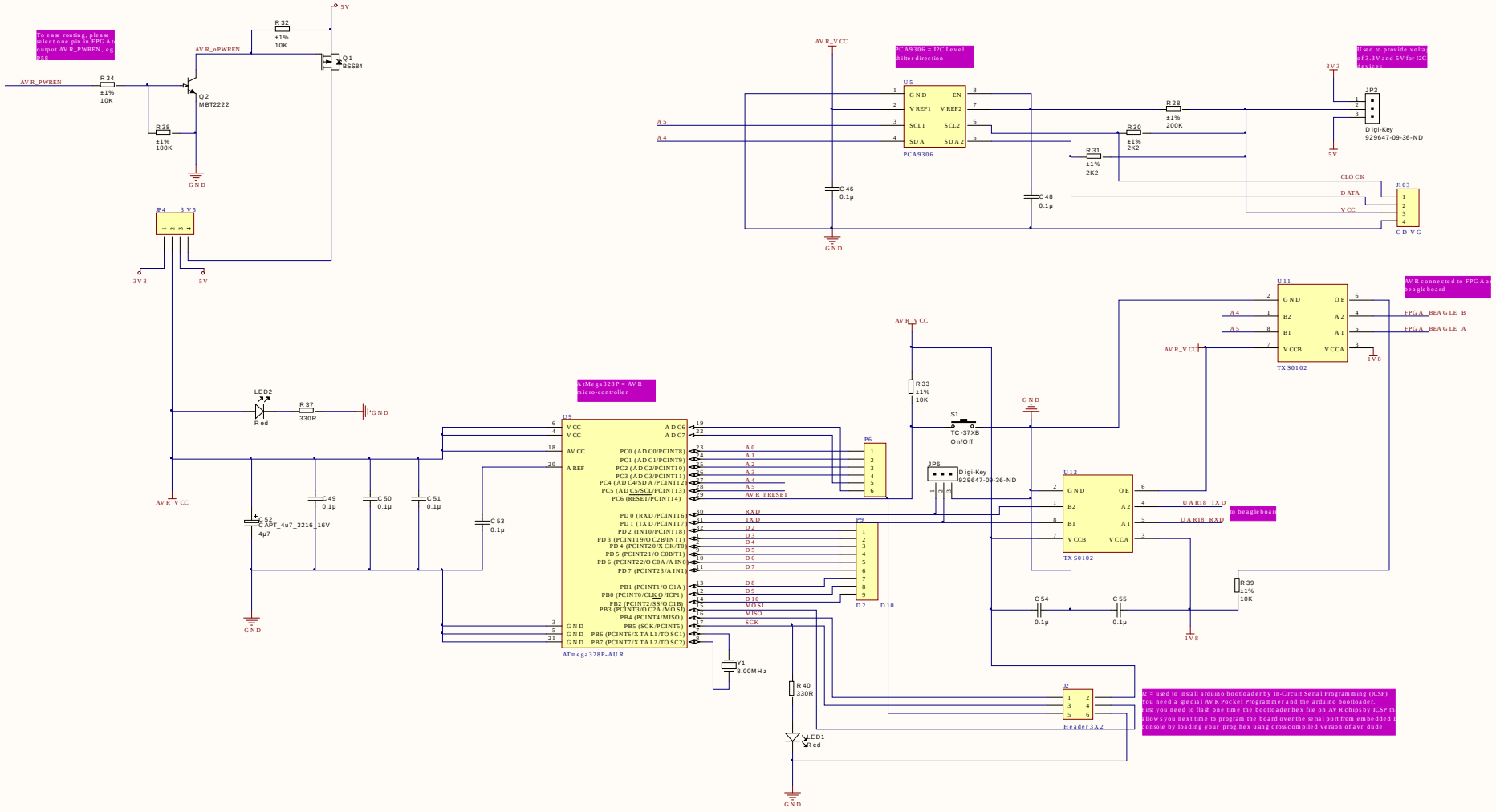


| Title | | |
|---|---|---|
| Size A2 | Number | Revision |
| Date: 07/04/2018 | | Sheet of |
| File: C:\Users\...\avr.SchDoc | | Drawn By: |