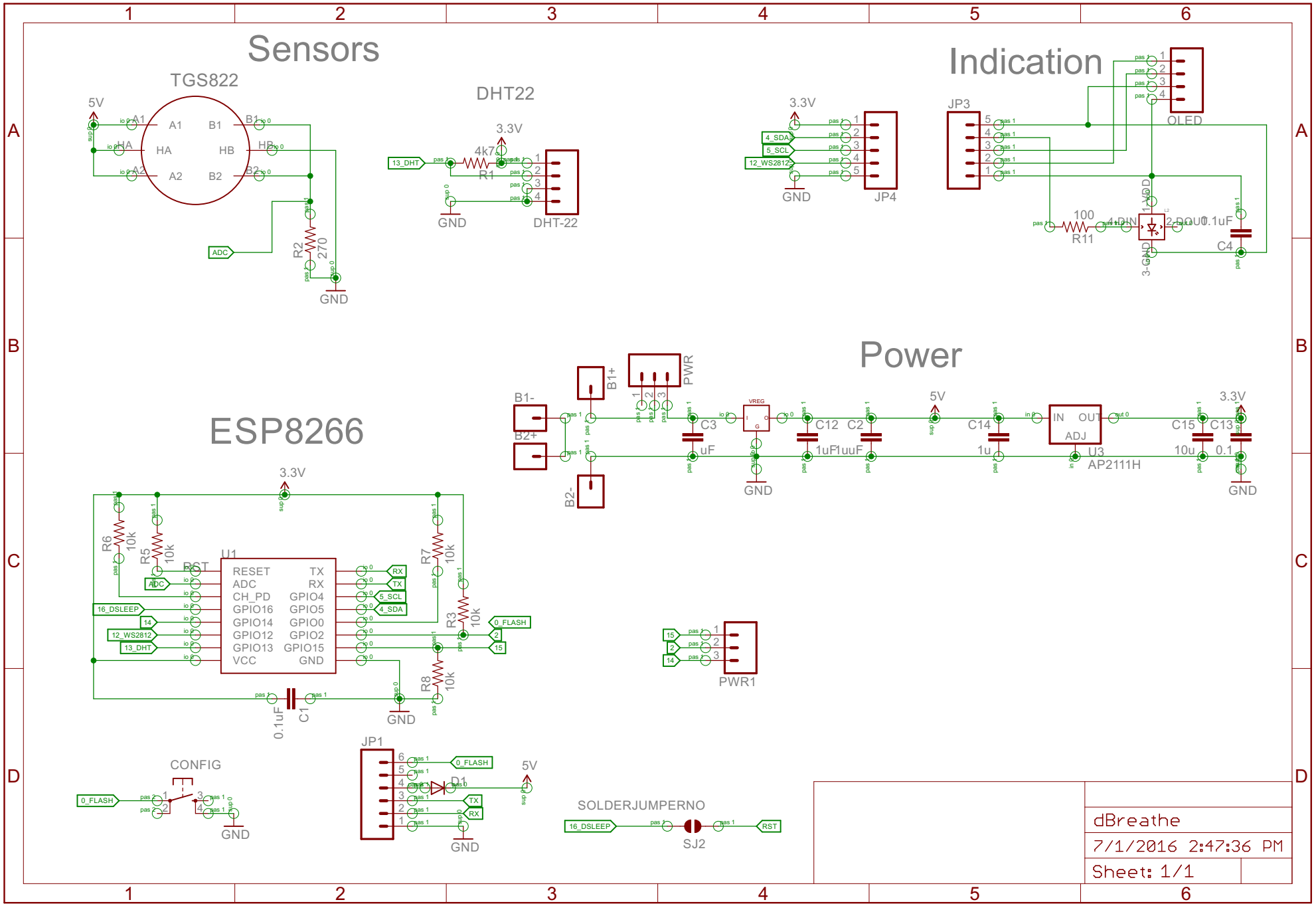

7/13/2016 10:44:54 AM D:\Dropbox\Arduino\Refactor\dBreathe\dBreathe.sch (Sheet: 1/1)