Competitive Programming

Eulerian Path

Slides by Feifei Qiao
NCSU Ph.D. Student

Eulerian Path[1]

Can we traverse every edge in the graph exactly once?

- **Eulerian paths:** A path that uses every **edge** exactly once.

- **Existing conditions:**

a) Undirected graph:

1) 0 or 2 vertices of odd degree
2) Connected

b) Directed graph:

1) For every node: in degree == out degree
2) Or:

   One node: out-degree = in-degree + 1 → start

   One node: in-degree = out-degree + 1 → end

   All others: in-degree = out-degree

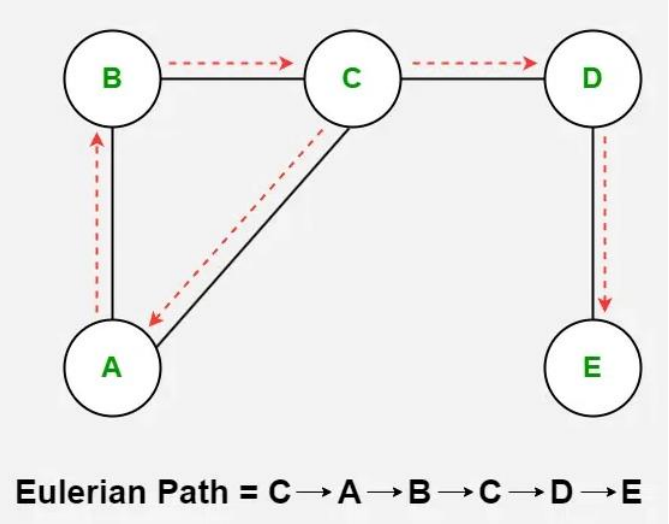

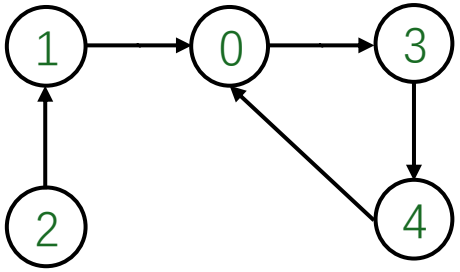

Eulerian path: 2-->1-->0-->3-->4-->0

1. https://open.kattis.com/problems/eulerianpath

$Eulerian\ Path$[1]

How to find a $Eulerian\ Path$ in the directed graph?

Step 1 — Check Degree Conditions
Step 2 — Check Connectivity
Step 3 : **Run Hierholzer Algorithm**:
a) Choose the Starting Vertex
Start from a vertex with out-degree = in-degree + 1
Otherwise, start from any vertex with outgoing edges.
b) Walking along edges from vertexes to vertexes:
each time:

- pick up any unused outgoing edge.
- move along it.
- mark that edge as used.

c) Repeat b) until get stuck, go back to previous vertex and record the vertex
d) Go back to the start vertex, get the full Eulerian path

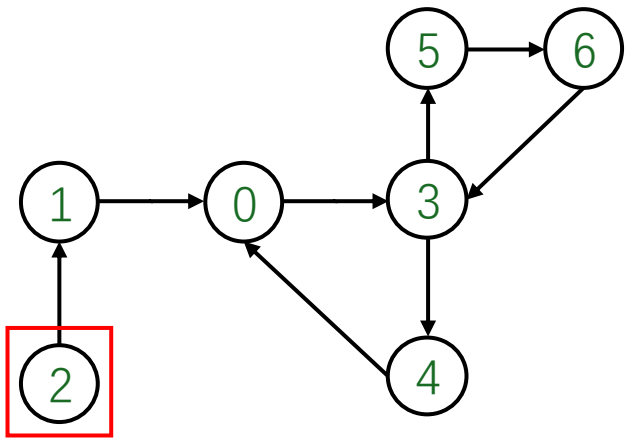

1. https://open.kattis.com/problems/eulerianpath

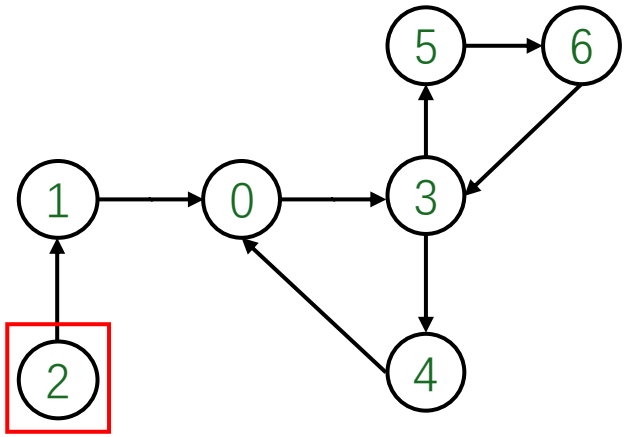

Eulerian Path[1]

Stack=[]:

•The stack keeps track of the current traversal path.

•When we follow an unused edge, we push the next vertex onto the stack.

•When we reach a vertex with no unused edges, we pop it and add it to the final path.

Path=[]: The path variable stores the final Eulerian path

- Start from 2, Stack=[2]
- Walk along 2->1, Stack=[2,1]
- Walk along 1->0, Stack=[2,1,0]
- Walk along 0->3, Stack=[2,1,0,3]
- Walk along 3->4, Stack=[2,1,0,3,4]
- Walk along 4->0, Stack=[2,1,0,3,4,0]
- Get Stuck at 0, pop Stack and add 0 to Path, Path=[0], Stack=[2,1,0,3,4]
- Pop Stack, get Stuck at 4, and add 4 to Path, Path=[0, 4], Stack=[2,1,0,3]
- Pop Stack and get 3, Stack=[2,1,0,3]

1. https://open.kattis.com/problems/eulerianpath

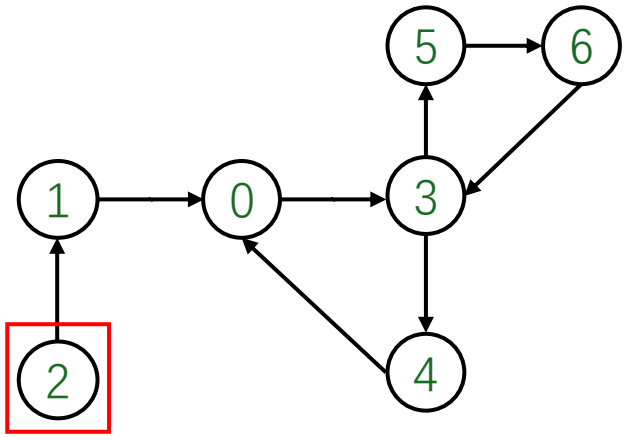

Eulerian Path[1]

- Walk along 3->5, Stack=[2,1,0,3,5]
- Walk along 5->6, Stack=[2,1,0,3,5,6]
- Walk along 6->3, Stack=[2,1,0,3,5,6,3]
- Get Stuck at 3, pop Stack and add 3 to Path, Path=[0, 4, 3], Stack=[2,1,0,3,5,6]
- Pop Stack, Get Stuck at 6, and add 6 to Path, Path=[0, 4, 3, 6], Stack=[2,1,0,3,5]
- Pop Stack, Get Stuck at 5, and add 5 to Path, Path=[0, 4, 3, 6, 5], Stack=[2,1,0,3]
- Pop Stack, Get Stuck at 3, and add 3 to Path, Path=[0, 4, 3,6, 5, 3], Stack=[2,1,0]
- Pop Stack, Get Stuck at 0, and add 0 to Path, Path=[0, 4, 3,6, 5,3,0], Stack=[2,1]
- Pop Stack, Get Stuck at 1, and add 1 to Path, Path=[0, 4, 3, 6, 5,3,0,1], Stack=[2]
- Pop Stack, Get Stuck at 2, and add 2 to Path, Path=[0, 4, 3, 6, 5, 3,0,1,2], Stack=[]
- Reverse Path and get Eulerian Path=[2,1,0,3,5,6,3,4,0]

Number of nodes: n

Number of edges: m

Time complexity:

- Degree computation: **O(n + m)**
- Connectivity check: O(n + m)
- Hierholzer traversal: O(m)

Space complexity:

- Adjacency list: **O(n + m)**
- Stack: O(m)
- Path: O(m)

1. https://open.kattis.com/problems/eulerianpath

Eulerian Path[1]

Example:

Hide

Eulerian Path

Input

The input consists of several test cases. Each test case starts with a line with two non-negative integers, $2 \leq n \leq 10\,000$ and $1 \leq m \leq 50\,000$, separated by a single space, where n is the numbers of nodes in the graph and m is the number of edges. Nodes are numbered from 0 to $n-1$. Then follow m lines, each line consisting of two (space-separated) integers u and v indicating that there is an edge from u to v in the graph.

Input will be terminated by a line containing `0 0`, this line should *not* be processed.

Output

For each test case, output a line consisting of a space-separated list of the nodes visited by an Eulerian path if one exists (if there are multiple Eulerian paths, any one is acceptable, so for the second case below, `1 0 1` is also a valid solution), or the word `Impossible` if no Eulerian path exists.

Sample Input 1

```
4 4
0 1
1 2
1 3
2 3
2 2
0 1
1 0
2 1
0 1
0 0
```

Sample Output 1

```
Impossible
0 1 0
0 1
```

1. https://open.kattis.com/problems/eulerianpath