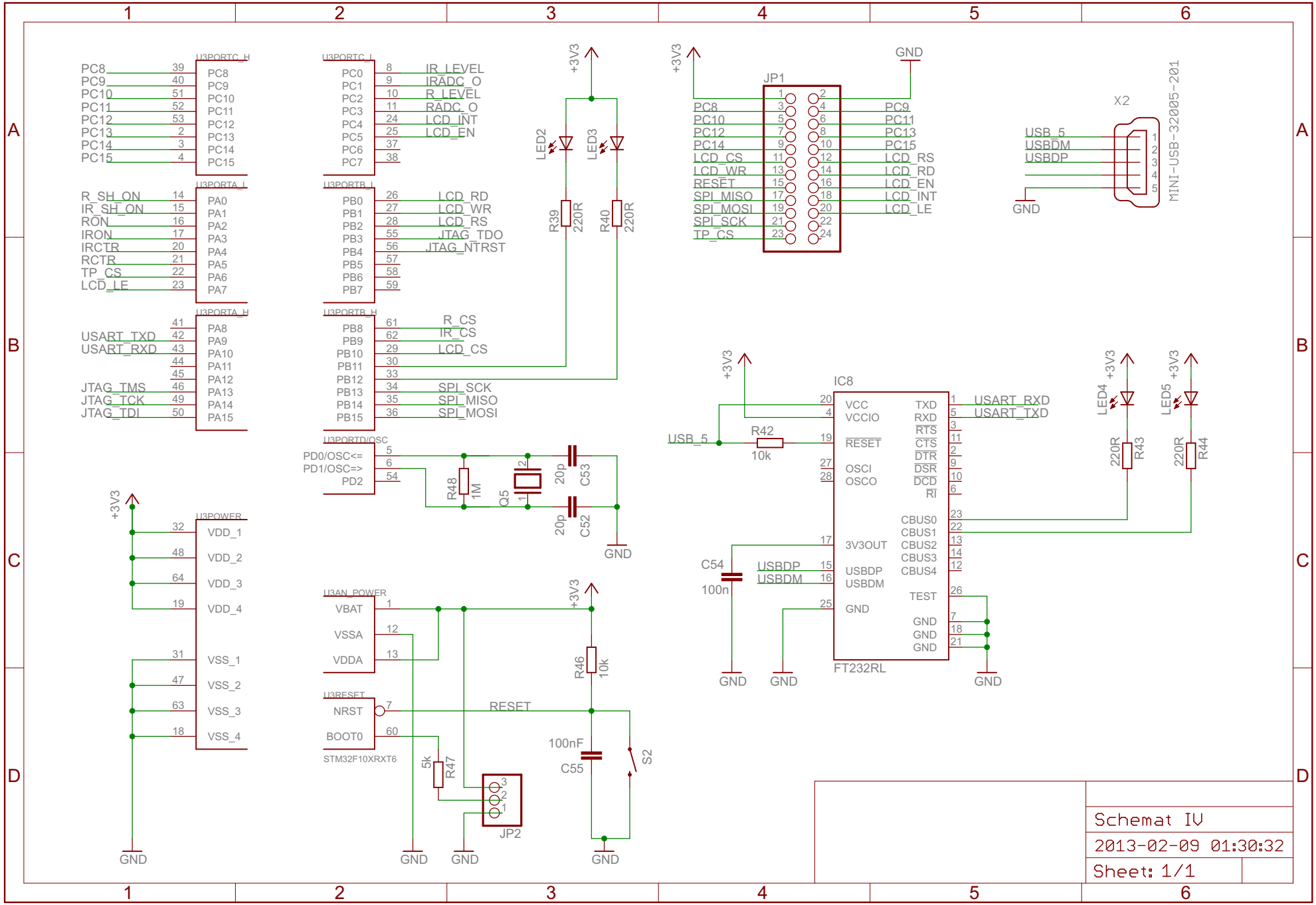
U3PORTC_H
PC8 39
PC9 40
PC10 51
PC11 52
PC12 53
PC13 2
PC14 3
PC15 4
U3PORTA_L
R_SH_ON 14
IR_SH_ON 15
RON 16
IRON 17
IRCTR 20
RCTR 21
TP_CS 22
LCD_LE 23
U3PORTA_H
USART_TXD 41
USART_RXD 42
43
44
45
JTAG_TMS 46
JTAG_TCK 49
JTAG_TDI 50
U3POWER
+3V3
VDD_1 32
VDD_2 48
VDD_3 64
VDD_4 19
VSS_1 31
VSS_2 47
VSS_3 63
VSS_4 18
GND
U3PORTC_L
PC0 8 IR_LEVEL
PC1 9 IRADC_O
PC2 10 R_LEVEL
PC3 11 RADC_O
PC4 24 LCD_INT
PC5 25 LCD_EN
PC6 37
PC7 38
U3PORTB_L
PB0 26 LCD_RD
PB1 27 LCD_WR
PB2 28 LCD_RS
PB3 55 JTAG_TDO
PB4 56 JTAG_NTRST
PB5 57
PB6 58
PB7 59
U3PORTB_H
PB8 61 R_CS
PB9 62 IR_CS
PB10 29 LCD_CS
PB11 30
PB12 33
PB13 34 SPI_SCK
PB14 35 SPI_MISO
PB15 36 SPI_MOSI
U3PORTD/OSC
PD0/OSC<= 5
PD1/OSC=> 6
PD2 54
R48 1M
Q5
20p C53
20p C52
GND
U3AN_POWER
VBAT 1
VSSA 12
VDDA 13
U3RESET
NRST 7
BOOT0 60
STM32F10XRXT6
5k R47
JP2
GND
+3V3
LED2
LED3
R39 220R
R40 220R
R46 10k
RESET
100nF C55
S2
GND
JP1
PC8 3
PC10 5
PC12 7
PC14 9
LCD_CS 11
LCD_WR 13
RESET 15
SPI_MISO 17
SPI_MOSI 19
SPI_SCK 21
TP_CS 23
2 GND
4 PC9
6 PC11
8 PC13
10 PC15
12 LCD_RS
14 LCD_RD
16 LCD_EN
18 LCD_INT
20 LCD_LE
22
24
X2
MINI-USB-32005-201
USB_5 1
USBDM 2
USBDP 3
4
5
GND
IC8
VCC 20
VCCIO 4
RESET 19
OSCI 27
OSCO 28
3V3OUT 17
USBDP 15
USBDM 16
GND 25
TXD 1 USART_RXD
RXD 5 USART_TXD
RTS 3
CTS 11
DTR 2
DSR 9
DCD 10
RI 6
CBUS0 23
CBUS1 22
CBUS2 13
CBUS3 14
CBUS4 12
TEST 26
GND 7
GND 18
GND 21
FT232RL
USB_5
R42 10k
C54 100n
USBDP
USBDM
GND
GND
GND
LED4
LED5
220R R43
220R R44
Schemat IV
2013-02-09 01:30:32
Sheet: 1/1